Submitted by Bluewave Capital
6/10/13 – 7:40p

KNOWLTON FARMS SOLAR DEVELOPMENT
43 ESTABROOK AVENUE
(ASSESSOR'S MAP 49 – LOT 1)

–APPLICATION FOR VARIANCE/SPECIAL PERMIT–
–APPLICATION FOR SITE PLAN APPROVAL–

PLANS AND DESIGN HAVE BEEN DEVELOPED IN ACCORDANCE WITH THE PERFORMANCE STANDARDS SET FORTH IN SECTION 4.1 OF THE GRAFTON ZONING BYLAW

LOCATED IN

GRAFTON, MASSACHUSETTS

DATE: MAY 13, 2013
REVISION 1: JUNE 6, 2013

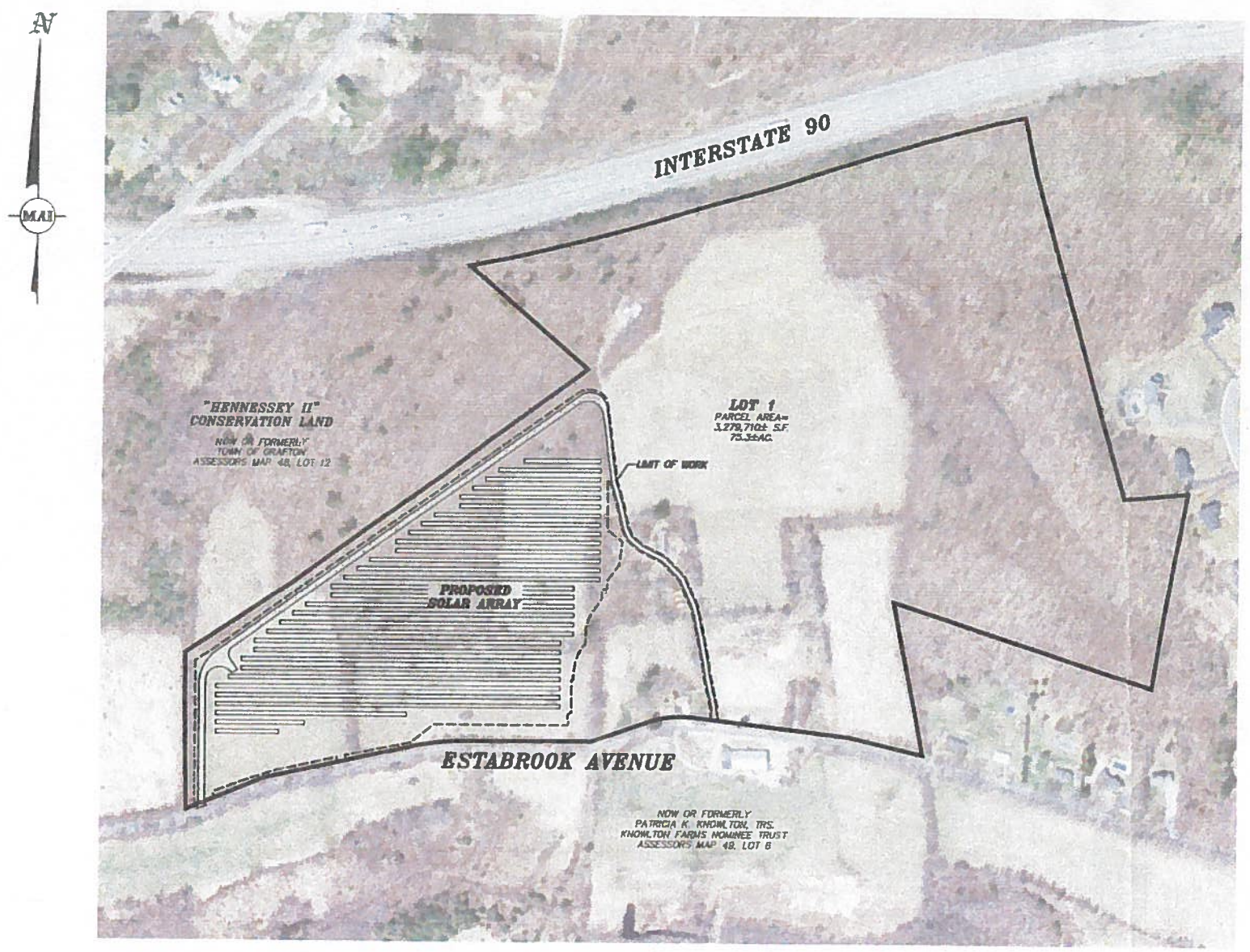

LOCUS CONTEXT MAP:

GRAPHIC SCALE
SCALE: 1"=200'

FEET 200 0 100 200 400 800
METERS 0 50 100 200 400

APPLICANT:

BLUEWAVE CAPITAL, LLC
JOHN DeVILLARS
75 ARLINGTON STREET, SUITE 500
BOSTON, MASSACHUSETTS 02116
BLUEWAVE
TEL: (617) 209-3122 FAX: (617) 395-2730
WWW.BLUEWAVE-CAPITAL.COM

RECORD OWNERS:

KNOWLTON FARMS NOMINEE TRUST
PATRICIA K. KNOWLTON, TRS.
43 ESTABROOK AVENUE
GRAFTON, MASSACHUSETTS 01519

SITE CIVIL ENGINEER:

MERIDIAN ASSOCIATES
500 CUMMINGS CENTER SUITE 5950
BEVERLY, MASSACHUSETTS 01915
TELEPHONE: (978) 299-8447
69 MILK STREET, SUITE 302
WESTBOROUGH, MASSACHUSETTS 01581
TELEPHONE: (508) 871-7030
WWW.MERIDIANASSOC.COM

CONSULTANT ENGINEER:

HARRIS MILLER MILLER & HANSON INC.
STEPHEN B. BARRETT
77 SOUTH BEDFORD STREET
BURLINGTON, MA 01803
TEL: (781) 852-3125 FAX: (781) 229-7939

ELECTRICAL ENGINEER:

solar design associates

LAND SURVEYOR:

MARK SANTORA, P.E. INC.
Civil & Environmental Engineering
PO Box 539
Grafton, MA 01519
Phone (508) 830-5113

DRAWING INDEX:

SHEET 1	COVER SHEET & LOCUS CONTEXT MAP
SHEET 2	EXISTING CONDITIONS PLAN
SHEET 3	PERMIT SITE PLAN OF LAND
SHEET 4	SITE DETAIL SHEET 1
SHEET 5	SITE DETAIL SHEET 2
SHEET 6	EROSION & SEDIMENT CONTROL PLAN
SHEET 7	RACKING CONNECTION PLAN
SHEET 8	RACKING DETAIL
SHEET 9	INVERTER EQUIPMENT PLAN
SHEET 10	OVERHEAD DETAILS

6/6/13

APPROVED BY:
GRAFTON PLANNING BOARD

DATE:

I, _____ CLERK OF THE TOWN OF GRAFTON, MASSACHUSETTS HEREBY CERTIFY THAT THE NOTICE OF APPROVAL OF THIS PLAN BY THE GRAFTON PLANNING BOARD HAS BEEN RECEIVED AND RECORDED AT THE OFFICE AND NO NOTICE OF APPEAL WAS RECEIVED DURING TWENTY DAYS NEXT AFTER SUCH RECEIPT AND RECORDING OF SAID NOTICE.

TOWN CLERK DATE

"THIS PLAN IS SUBJECT TO A SPECIAL PERMIT DATED _____"
"THIS PLAN IS SUBJECT TO SITE PLAN APPROVAL DATED _____"
"THIS PLAN IS SUBJECT TO A CERTIFICATE OF OF GOOD STANDING DATED _____"

DWG. No. 5540-CVR
(IMAGE: USGS Color Ortho Imagery (2008/2009))

Copyright © by Meridian Associates, Inc. All rights reserved

17

EXHIBIT

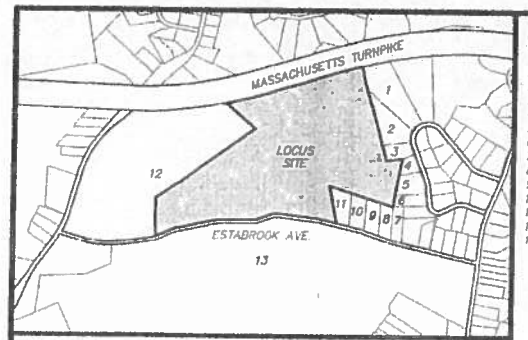

LOCUS MAP:
(SCALE 1"=1000')

ABUTTER INFORMATION:
NOW OR FORMERLY

1. MAP 41/LOT 104 – JOSEPH DIROBERTO (23 VALLEY VIEW DRIVE)
2. MAP 41/LOT 103 – RICHARD URELLA (21 VALLEY VIEW DRIVE)
3. MAP 41/LOT 102 – STEVE SARDELLA (19 VALLEY VIEW DRIVE)
4. MAP 41/LOT 101 – FARID THANAWALLA (17 VALLEY VIEW DRIVE)
5. MAP 50/LOT 16 – MARTIN URBAN (15 VALLEY VIEW DRIVE)
6. MAP 50/LOT 15 – YONGHUA QIA (13 VALLEY VIEW DRIVE)
7. MAP 50/LOT 3F – WILLIAM MCNALLY (63 ESTABROOK AVENUE)
8. MAP 49/LOT 5 – CAROL WAHLGREN (61 ESTABROOK AVENUE)
9. MAP 49/LOT 4 – STEPHEN GOODSPEED (59 ESTABROOK AVENUE)
10. MAP 49/LOT 3 – KIM LORINA CHISSON (57 ESTABROOK AVENUE)
11. MAP 49/LOT 2 – WALDO SIMPSON (55 ESTABROOK AVENUE)
12. MAP 48/LOT 12 – TOWN OF GRAFTON (48 OLD WESTBORO ROAD)
13. MAP 49/LOT 6 – KNOWLTON FARMS NOMINEE TRUST (43 ESTABROOK AVENUE)

LEGEND:

	TWO FOOT CONTOUR
480	TEN FOOT CONTOUR
	WETLAND LINE
+WF C2	WETLAND FLAG
	LIMIT OF BUFFER ZONE
	TREE LINE
	STONE WALL–BOUNDARY
	STONE WALL–INTERIOR
	GRAVEL ROAD
	EXPOSED LEDGE
	BOULDER
D	DRAIN LINE
OHW	OVERHEAD WIRES
	TERMINUS UNKNOWN
UP	UTILITY POLE
SB7	SOIL BORING
BK.	BOOK
PG.	PAGE
TYP.	TYPICAL
INV.	INVERT
EOP	EDGE OF PAVEMENT
AC.	ACRES
S.F.	SQUARE FOOT

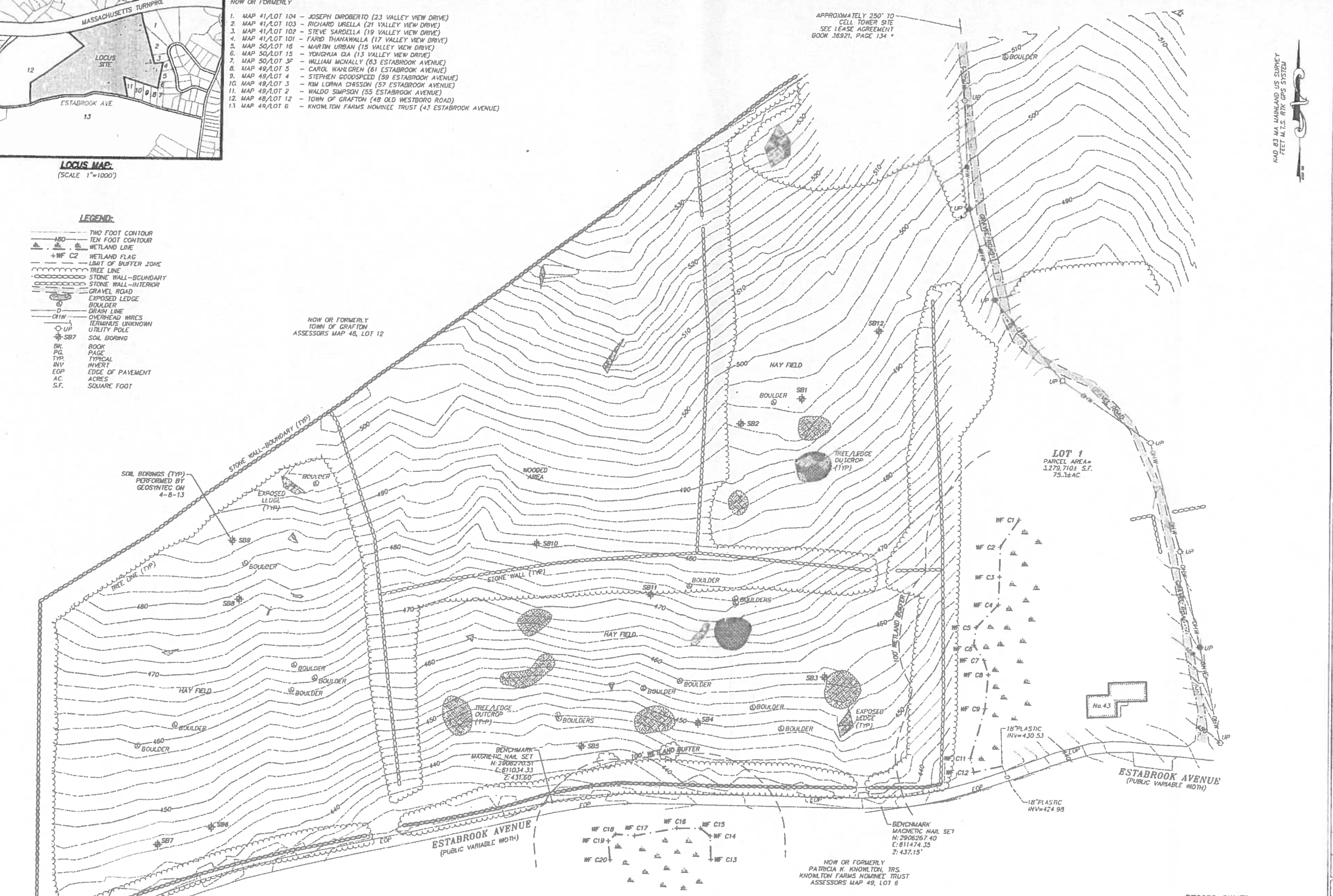

RECORD OWNER:

KNOWLTON FARMS NOMINEE TRUST
PATRICIA K. KNOWLTON, TRS.
43 ESTABROOK AVENUE
GRAFTON, MASSACHUSETTS 01519
– DEED BOOK 35401, PAGE 337 *
ASSESSORS MAP 49/LOT 1

* DENOTES DOCUMENTS RECORDED AT THE WORCESTER DISTRICT REGISTRY OF DEEDS.

13-3004

FIELD SURVEY PERFORMED BY CHAPPELL ENGINEERING ASSOCIATES, LLC AND WAS COMPLETED ON APRIL 1-3, 2013.

ALL UNDERGROUND UTILITY INFORMATION PRESENTED HEREON WAS DETERMINED FROM SURFACE EVIDENCE AND PLANS OF RECORD. ALL UNDERGROUND UTILITIES SHOULD BE LOCATED IN THE FIELD PRIOR TO THE COMMENCEMENT OF ANY SITE WORK. CALL DIG SAFE 1-888-344-7233 A MINIMUM OF 72 HOURS PRIOR TO PLANNED ACTIVITY.

PROPERTY LINE INFORMATION IS COMPILED FROM FIELD OBSERVATIONS AND MASS GIS DATA. NOT INTENDED TO BE A BOUNDARY SURVEY.

BEARING SYSTEM OF THIS PLAN IS BASED UPON MASS MARYLAND STATE PLANE GRID. GRID NORTH WAS ESTABLISHED FROM RTK GPS READINGS ON APRIL 1, 2013.

VERTICAL DATUM: NORTH AMERICAN VERTICAL DATUM OF 1988 (NAVD88)

HORIZONTAL DATUM: NORTH AMERICAN DATUM OF 1983 (NAD83)

PROPERTY HAS LEASE AGREEMENT FOR THE PRESENCE OF A CELLULAR COMMUNICATION TOWER LOCATED AS SHOWN HEREIN. REFERENCE BK 36921 PG 134* RECORDED AT THE WORCESTER COUNTY REGISTRY OF DEEDS.

WETLANDS HAVE BEEN DELINEATED BY LEC ENVIRONMENTAL CONSULTANTS ON APRIL 1, 2013.

ZONE R40 – RESIDENTIAL
MIN AREA = 40,000 S.F.
MIN FRONTAGE = 140'
MIN FRONT YARD SETBACKS = 30
MIN SIDE & REAR YARD SETBACK = 15'

DATE	REVISIONS	
6.06.13	REMOVE WFC10 PER TOWN	MS

MARK M. SANTORA CIVIL No. 40187

RECORD OWNER:
KNOWLTON FARMS NOMINEE TRUST
43 ESTABROOK AVENUE
NORTH GRAFTON, MA 01536

APPLICANT:
BLUEWAVE CAPITAL, LLC
75 ARLINGTON STREET
BOSTON, MA 02116

PROJECT TITLE:
PROPOSED SOLAR ARRAY PROJECT
NORTH GRAFTON, MA 01536

PLAN TITLE:
PLAN OF LAND IN NORTH GRAFTON, MA 01536 EXISTING CONDITIONS

DATE: 05/17/2013

SCALE: 1"=60'

DRAWN BY:	CHECKED BY:	APPROVED BY:
TC	MMS	

MARK SANTORA, P.E. INC.
Civil & Environmental Engineering
PO Box 539
Grafton, MA 01519
Phone (508) 838-5113

SHEET: 2

NOTES:

1. THE TOPOGRAPHY, SITE DETAIL & SURFACE IMPROVEMENTS DEPICTED HEREON WERE OBTAINED FROM AN INSTRUMENT SURVEY CONDUCTED ON THE GROUND BY CHAPPELL ENGINEERING ASSOCIATES, LLC ON APRIL 1-3, 2013 AND PREPARED BY MARK SANTORA P.E., INC. ON APRIL 29, 2013.
2. THE SUBJECT PROPERTY DEPICTED IS LOCATED IN ZONE RESIDENTIAL (R40).
3. THE SUBJECT PROPERTY IS DEPICTED AS LOT 1 ON THE TOWN OF GRAFTON ASSESSOR'S MAP 49.
4. THE LOCATION OF ALL UNDERGROUND UTILITIES SHOWN ARE APPROXIMATE AND ARE BASED UPON A PARTIAL FIELD SURVEY AND COMPILATION OF PLANS OF RECORD. MERIDIAN ASSOCIATES, INC. DOES NOT WARRANTY NOR GUARANTEE THE LOCATION OF ALL UTILITIES DEPICTED OR NOT DEPICTED. THE CONTRACTOR, PRIOR TO COMMENCEMENT OF CONSTRUCTION, SHALL VERIFY THE LOCATION OF ALL UTILITIES AND CONTACT DIG SAFE AT 1-888-344-7233.
5. THIS PLAN DOES NOT SHOW ANY UNRECORDED OR UNWRITTEN EASEMENTS WHICH MAY EXIST. A REASONABLE AND DILIGENT ATTEMPT HAS BEEN MADE TO OBSERVE ANY APPARENT, VISIBLE USES OF THE LAND, HOWEVER, THIS DOES NOT CONSTITUTE A GUARANTEE THAT NO SUCH EASEMENTS EXIST.
6. THE ELEVATIONS DEPICTED HEREON ARE BASED UPON NORTH AMERICAN VERTICAL DATUM OF 1988 (NAVD88) AND DERIVED WITH GPS OBSERVATIONS ON APRIL 1, 2013.
7. HORIZONTAL DATUM IS THE MASSACHUSETTS STATE PLANE COORDINATE SYSTEM (NAD83) AS DERIVED FROM GPS OBSERVATIONS ON APRIL 1, 2013.
8. PROPERTY LINES DEPICTED HEREON ARE BASED ON COMPILED DEEDS AND PLANS OF RECORD. THIS PLAN IS NOT TO BE USED FOR THE RECONSTRUCTION OF BOUNDARY LINES OR FOR TITLE INSURANCE PURPOSES. ALL BOUNDARY LINES DEPICTED ARE APPROXIMATE ONLY. MAI DID NOT PERFORM A BOUNDARY RETRACEMENT SURVEY.
9. THE WETLAND FLAGS DEPICTED WERE DEMARCATED BY LEC ENVIRONMENTAL CONSULTANTS, INC. ON APRIL 1, 2013.
11. THE SOIL BORINGS DEPICTED HEREON WERE PERFORMED BY NIKOLAOS S. KONTOPOULOS, PhD, GEOLOGIST, OF GEOSYNTEC CONSULTANTS ON APRIL 8, 2013.
12. THE SUBJECT PROPERTY IS LOCATED IN FLOOD ZONE X (UNSHADED), AREAS DETERMINED TO BE OUTSIDE THE 0.2% ANNUAL CHANCE FLOODPLAIN, PER FEMA FLOOD INSURANCE RATE MAP NUMBER 25027C0831E DATED JULY 4, 2011.
13. THE SUBJECT SITE IS LOCATED WITHIN THE MISCOE, WARREN AND WHITEHALL WATERSHEDS AREA OF CRITICAL AND ENVIRONMENTAL CONCERN AS DESIGNATED BY THE MASSACHUSETTS DEPARTMENT OF CONSERVATION AND RECREATION.

ALL UNDERGROUND UTILITY DATA REPRESENTS RECORD INFORMATION RECOVERED THROUGH RESEARCH WITHOUT SURFACE DEMARCATION NOR SUBSURFACE VERIFICATION.

TEMPORARY BENCHMARK CHART:

T.B.M.#	DESCRIPTION	ELEVATION
1	MAGNETIC NAIL SET IN BITUMINOUS ROADWAY	431.60
2	MAGNETIC NAIL SET IN BITUMINOUS ROADWAY	437.15

(SEE NOTE 6)

SOILS INFORMATION:

TEST PITS WERE PERFORMED ON JUNE 5, 2013 BY PETER POMMERSHEIM (CERTIFIED SOIL EVALUATOR) OF MERIDIAN ASSOCIATES, INC. AND WITNESSED BY JEFFREY WALSH OF GRAVES ENGINEERING, INC.

TEST PIT: TPM13-1
ELEV.=446.0±
E.S.H.G.W. @ 54" (ELEV=441.5±)
0"-12" LAYER Ap: FINE SANDY LOAM
12"-24" LAYER Bw: SANDY LOAM
24"-60" LAYER C: SANDY LOAM
NO WEEPING OBSERVED
NO STANDING WATER OBSERVED
REDOX OBSERVED @ 54"
REFUSAL @ 60"

TEST PIT: TPM13-2
ELEV.=444.0±
E.S.H.G.W. @ 70" (ELEV=438.2±)
0"-12" LAYER Ap: FINE SANDY LOAM
12"-[illegible] LAYER Bw: SANDY LOAM
30"-80" LAYER C: SAND LOAM
NO WEEPING OBSERVED
NO STANDING WATER OBSERVED
REDOX OBSERVED @ 70"
REFUSAL @ 70"

TEST PIT: TPM13-3
ELEV.=442.0±
E.S.H.G.W. @ 60" (ELEV=437.0±)
0"-12" LAYER Ap: FINE SANDY LOAM
12"-22" LAYER Bw: SANDY LOAM
22"-60" LAYER C: SANDY LOAM
NO WEEPING OBSERVED
NO STANDING WATER OBSERVED
NO REDOX OBSERVED
REFUSAL @ 60"

TEST PIT: TPM13-4
ELEV.=440.0±
E.S.H.G.W. @ 70" (ELEV=434.[illegible]±)
0"-12" LAYER Ap: FINE SAND LOAM
12"-24" LAYER Bw: SANDY LOAM
24"-70" LAYER C: SAND
NO WEEPING OBSERVED
NO STANDING WATER OBSERVED
NO REDOX OBSERVED
REFUSAL @ 70"
*MANY ROOTS TO BOTTOM OF TEST PIT

TEST PIT: TPM13-5
ELEV.=441.0±
E.S.H.G.W. @ 54" (ELEV=435.5±)
0"-12" LAYER Ap: FINE SANDY LOAM
12"-22" LAYER Bw: SANDY LOAM
22"-52" LAYER C: SANDY LOAM
52"-70" LAYER C: SILT LOAM
NO WEEPING OBSERVED
NO STANDING WATER OBSERVED
REDOX OBSERVED @ 54"
REFUSAL NOT REACHED

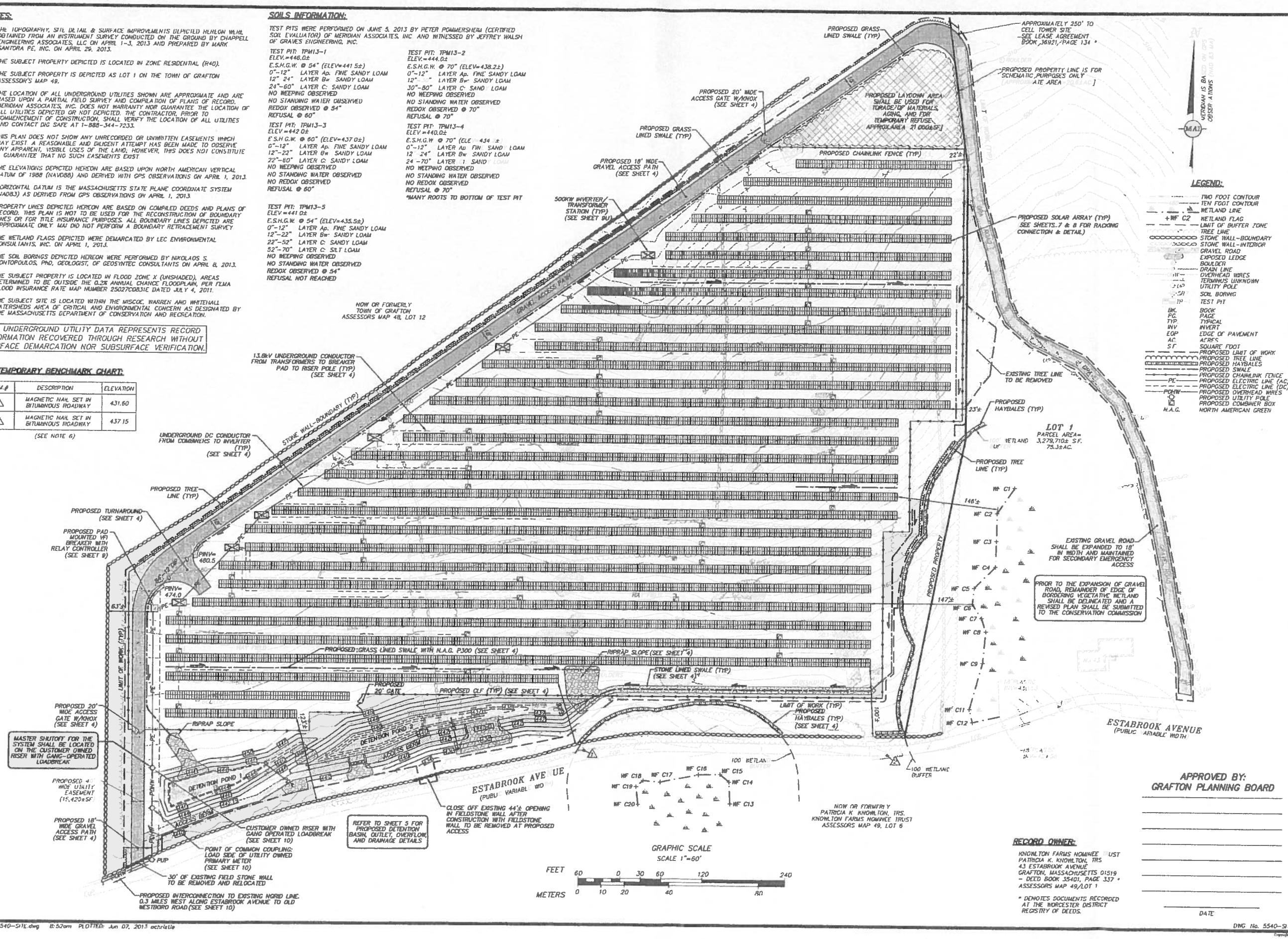

RECORD OWNER:

KNOWLTON FARMS NOMINEE TRUST
PATRICIA K. KNOWLTON, TRS
43 ESTABROOK AVENUE
GRAFTON, MASSACHUSETTS 01519
- DEED BOOK 35401, PAGE 337 *
ASSESSORS MAP 49/LOT 1

* DENOTES DOCUMENTS RECORDED AT THE WORCESTER DISTRICT REGISTRY OF DEEDS.

APPROVED BY:
GRAFTON PLANNING BOARD

DATE

DWG FILE: 5540-SITE.dwg 8:52am PLOTTED: Jun 07, 2013 achristie

DWG No. 5540-SITE

REVISIONS			
DATE	DESCRIPTION	BY	
6.06.13	ADDRESS TOWN & GRAVES COMMENTS	ACC	

COMMONWEALTH OF MASSACHUSETTS — ROBERT J. WALSH JR. — CIVIL — No. 34176 — PROFESSIONAL ENGINEER — 6/6/13

PERMIT SITE PLAN OF LAND
LOCATED IN
GRAFTON, MASSACHUSETTS
(WORCESTER COUNTY)
PREPARED FOR
BLUEWAVE CAPITAL, LLC

MERIDIAN ASSOCIATES
500 CUMMINGS CENTER, SUITE 2950
BEVERLY, MASSACHUSETTS 01915
TELEPHONE: (978) 283-0313
69 MILK STREET, SUITE 302
WESTBOROUGH, MASSACHUSETTS 01581
TELEPHONE: (508) 870-7000
WWW.MERIDIANASSOC.COM

DESIGNED BY: A. CHRISTIE
CHECKED BY: R. WALTT

DATE: MAY 13, 2013
SCALE: 1"=60'
SHEET No. 3 OF 10
PROJECT No. 5540

Copyright © by Meridian Associates, Inc. All rights reserved.

Tensar NORTH AMERICAN GREEN

Tensar International Corporation
5401 St. Wendel-Cynthiana Road
Poseyville, Indiana 47633
Tel. 800.772.2040
Fax 812.867.0247
www.nagreen.com

Material and Performance Specification
P300 Turf Reinforcement Mat

Description

The permanent turf reinforcement mat shall be a machine-produced mat of 100% UV stable polypropylene fiber. The matting shall be of consistent thickness with the synthetic fibers evenly distributed over the entire area of the mat. The Matting shall be covered on the top side with black heavyweight UV stabilized polypropylene netting having ultraviolet additives to delay breakdown and an approximate 0.50 x 0.50 inch (1.27 x 1.27 cm) mesh. The bottom net shall also be UV stabilized polypropylene with a 0.63 x 0.63 (1.57 x1.57 cm) mesh size. The blanket shall be sewn together on 1.50 inch (3.81 cm) centers with nondegradable thread. All mats shall be manufactured with a colored thread stitched along both outer edges as an overlap guide for adjacent mats.

The P300 shall meet Type 5A, 5B, specification requirements established by the Erosion Control Technology Council (ECTC) and Federal Highway Administration's (FHWA) FP-03 Section 713.18

[illegible]	[illegible]	[illegible]
Thickness	ASTM D6525	0.54 in (13.72 mm)
Resiliency	ASTM 6524	91.5%
Density	ASTM D792	0.513 oz/in³
Mass/Unit Area	ASTM 6566	11.46 oz/yd² (389 g/m²)
UV Stability	ASTM D4355 /1000 hr	90%
Porosity	ECTC Guidelines	95.89%
Stiffness	ASTM D1388	97.24 oz-in
Light Penetration	ECTC Guidelines	15%
Tensile Strength - MD	ASTM D6818	481 lbs/ft (7.02 kN/m)
Elongation - MD	ASTM D6818	20%
Tensile Strength - TD	ASTM D6818	426 lbs/ft (6.22 kN/m)
Elongation - TD	ASTM D6818	23%

[illegible]		
Matrix	100% UV stabilized Polypropylene fiber	0.7 lbs/yd² (0.38 kg/m²)
Netting	Top, UV stabilized Polypropylene; Bottom, UV stabilized Polypropylene	5 lb/1000 ft² (2.44 kg/100 m²); 3 lb/1000 ft² (1.47 kg/100m²)
Thread	Polypropylene, UV stable	

[illegible]	Short Duration	Long Duration
Phase 1 Unvegetated	3.0 lbs/ft² (144 Pa)	2.0 lbs/ft² (96 Pa)
Phase 2 Partially Veg.	8.0 lbs/ft² (383 Pa)	8.0 lbs/ft² (383 Pa)
Phase 3 Fully Veg.	8.0 lbs/ft² (383 Pa)	8.0 lbs/ft² (383 Pa)
Unvegetated Velocity	9.0 ft/s (2.7 m/s)	
Vegetated Velocity	16 ft/s (4.9 m/s)	

[illegible]		
Width	6.5 ft (2.0 m)	8 ft (2.44 m)
Length	108 ft (32.92 m)	112 ft (34.14 m)
Weight ± 10%	61.0 lbs (27.66 kg)	76.25 lbs (34.59 kg)
Area	80 yd² (66.9 m²)	100 yd² (83.61 m²)

Slope Length (L)	Slope Gradients (S) ≤ 3:1	3:1 - 2:1	≥ 2:1
≤ 20 ft (6 m)	0.001	0.029	0.082
20-50 ft	0.036	0.060	0.096
≥ 50 ft (15.2 m)	0.070	0.090	0.118

Test Method	Parameters	Results
ECTC 2 Rainfall	50 mm (2 in)/hr-30 min; 100mm (4 in)/hr-30 min; 150 mm (6 in)/hr 30 min	SLR** = 11.90; SLR** = 10.79; SLR** = 10.17
ECTC 3 Shear Res	Shear at 0.50 inch soil loss	3.30 lbs/ft²
ECTC 4 Germination	Top Soil, Fescue, 21 day incubation	253% improvement of biomass

* Bench Scale tests should not be used for design purposes
** Soil Loss Ratio = Soil Loss Bare Soil/Soil Loss with RECP

Flow Depth	Manning's n
≤ 0.50 ft (0.15 m)	0.034
0.50 - 2.0 ft	0.034-0.020
≥ 2.0 ft (0.60 m)	0.020

Proud Participant of:

Tensar International Corporation warrants that at the time of delivery the product furnished hereunder shall conform to the specification stated herein. Any other warranty including merchantability and fitness for a particular purpose, are hereby excluded. If the product does not meet specifications on this page and Tensar is notified prior to installation, Tensar will replace the product at no cost to the customer. This product specification supersedes all prior specifications for the product described above and is not applicable to any products shipped prior to January 1, 2011.

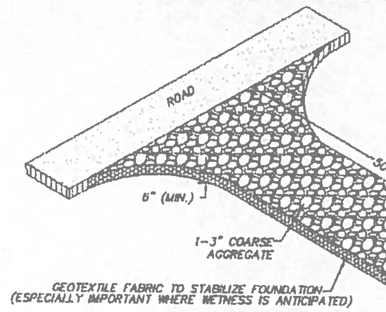

CONSTRUCTION TRACKING ENTRANCE/EXIT PAD
(NOT TO SCALE)

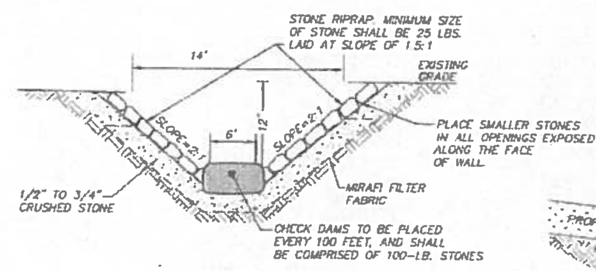

STONE LINED DRAINAGE SWALE
(NOT TO SCALE)

GROUNDING NOTES:

A. GROUND FENCE ENCLOSURES AT DIAGONALLY OPPOSITE CORNERS AND AT INTERVALS NOT EXCEEDING 500 FEET
B. WHERE AN ELECTRIC UTILITY LINE PASSES OVER THE FENCE, FENCE SHALL BE GROUNDED AT POINTS 50 FEET, MEASURED HORIZONTALLY, BEYOND WHERE THE OUTSIDE CONDUCTORS PASS OVER THE FENCE.
C. WHERE AN ELECTRIC UTILITY LINE RUNS PARALLEL TO AND WITHIN 40 FEET OF THE FENCE, MEASURED HORIZONTALLY, FENCE SHALL BE GROUNDED AT 50 FT. MAXIMUM INTERVALS ALONG THE PARALLEL SECTION OF FENCE.
D. FENCE POST GROUNDING SHALL CONSIST OF THREE GROUNDING CLAMPS, INSTALLED AT THE TOP, MIDDLE AND BOTTOM OF THE POST, CONNECTED TO THE GROUND WIRE.
E. FENCE GROUNDING SHALL CONSIST OF CONDUCTORS SECURED TO THE FENCE WITH COMPRESSION CONNECTORS.

THE NATIONAL ELECTRICAL SAFETY CODE (NESC) RECOMMENDS THAT WHERE FENCES ARE REQUIRED TO BE GROUNDED, SUCH GROUNDING SHALL BE DESIGNED TO LIMIT TOUCH, STEP AND TRANSFERRED VOLTAGES IN ACCORDANCE WITH INDUSTRY PRACTICE.

THE NESC REQUIRES THAT THE GROUNDING CONNECTION BE MADE EITHER TO THE GROUNDING SYSTEM OF THE ENCLOSED EQUIPMENT OR TO A SEPARATE GROUND. IN ADDITION, THE NESC IN SECTION 92E, LISTS SIX SEPARATE REQUIREMENTS FOR FENCES:

1. WHERE GATES ARE INSTALLED, THE FENCE SHALL BE GROUNDED AT EACH SIDE OF THE GATE OR SIMILAR OPENING
2. IF A CONDUCTING GATE IS USED, A BURIED BONDING JUMPER MUST BE INSTALLED ACROSS THE OPENING
3. WHERE GATES ARE INSTALLED, THEY SHALL BE BONDED TO THE FENCE, GROUNDING CONDUCTOR OR OTHER BONDING JUMPER.
4. IF THE FENCE POSTS CONSIST OF A CONDUCTING MATERIAL, THE GROUNDING CONDUCTOR MUST BE CONNECTED TO THE FENCE POSTS WITH A SUITABLE CONNECTING MEANS
5. IF THE FENCE CONTAINS SECTIONS OF BARBED WIRE, THE BARBED WIRE MUST ALSO BE BONDED TO THE FENCE, GROUNDING CONDUCTOR OR OTHER BONDING JUMPER
6. IF THE FENCE POSTS CONSIST OF A NONCONDUCTING MATERIAL, A BONDING CONNECTION SHALL BE MADE TO THE FENCE MESH STRANDS AND BARBED WIRE STRANDS AT EACH GROUNDING CONDUCTOR POINT.

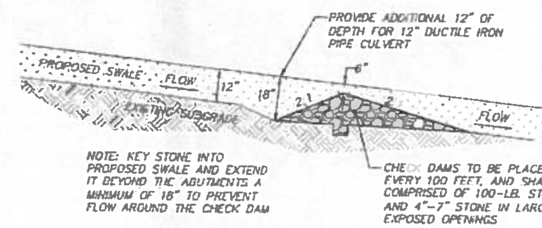

TYPICAL STONE CHECK DAM
(NOT TO SCALE)

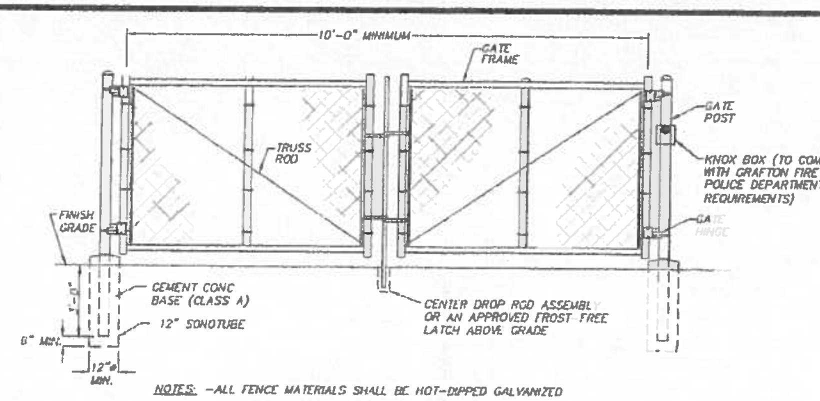

NOTES: -ALL FENCE MATERIALS SHALL BE HOT-DIPPED GALVANIZED

CHAIN LINK DOUBLE-SWING VEHICLE GATE
(NOT TO SCALE)

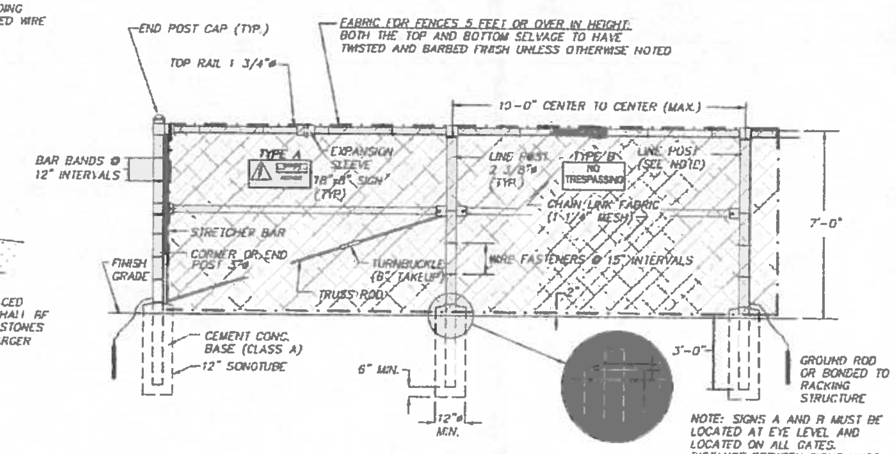

NOTE: SIGNS A AND B MUST BE LOCATED AT EYE LEVEL AND LOCATED ON ALL GATES. DISTANCE BETWEEN SIGNS MUST NOT EXCEED 50'.

AFFIX APPROPRIATE COMPANY OWNER NAME AND CONTACT INFO DECAL TO BOTH SIGNS A AND B.

NOTES: -ALL FENCE MATERIALS SHALL BE HOT-DIPPED GALVANIZED

CHAIN LINK FENCE W/ TOPRAIL DETAIL
(NOT TO SCALE)

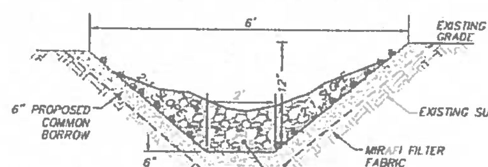

GRASS LINED DRAINAGE SWALE
(NOT TO SCALE)

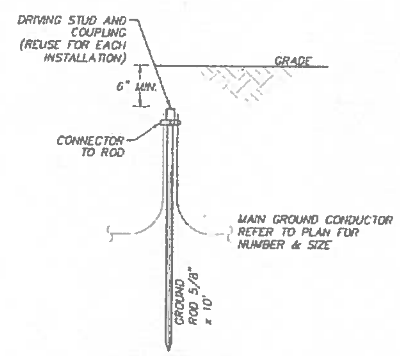

TYPICAL GROUNDING ROD DETAIL
(NOT TO SCALE)

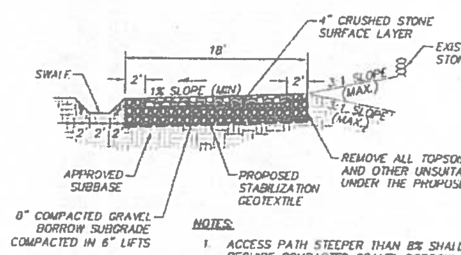

NOTES:

1. ACCESS PATH STEEPER THAN 8% SHALL REQUIRE COMPACTED GRAVEL BORROW IN PLACE OF CRUSHED STONE URFACE LAYER
2. SWALES STEEPER THAN 5% MAY REQUIRE A STONE LINING

TYPICAL GRAVEL TURNAROUND/ACCESS PATH CROSS SECTION
(NOT TO SCALE)

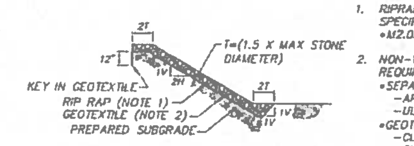

NOTES:

1. RIPRAP SHALL MEET THE FOLLOWING MASSDOT SPECIFICATIONS.
   - M2.02.4 MODIFIED ROCKFILL.
2. NON-WOVEN GEOTEXTILE SHALL MEET REQUIREMENTS OF AASHTO M 28 AS FOLLOWS.
   - SEPARATION GEOTEXTILE PROPERTIES (TABLE 3)
     - APPARENT OPENING SIZE
     - ULTRAVIOLET STABILITY
   - GEOTEXTILE STRENGTH PROPERTY (TABLE 1)
     - CLASS 2 GRAB STRENGTH
     - CLASS 2 PUNCTURE STRENGTH

RIPRAP SLOPE DETAIL
(NOT TO SCALE)

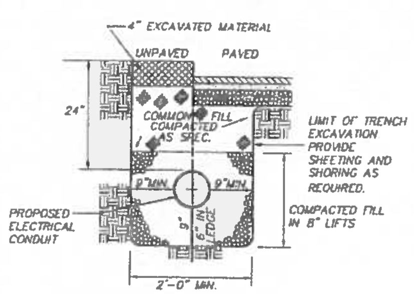

TYPICAL CONDUIT TRENCH DETAIL
(NOT TO SCALE)

FILL SPECIFICATION

FINE AGGREGATE SHALL CONSIST OF HARD, DURABLE SAND, FRE OF CLAY, ORGANIC MATTER, SURFACE COATINGS, AND OTHER DELETERIOUS MATERIALS. SOIL FINER THAN THE No. 200 SIEVE (THE FINES) SHALL BE NONPLASTIC. FINE AGGREGATE FILL SHALL CONFORM TO THE REQUIREMENTS OF THE 1988 MASS. HIGHWAY DEPT. STANDARD SPECIFICATIONS FOR HIGHWAYS AND BRIDGES, SECTION M4.02.02A (2010 SUPPLEMENTAL SPECIFICATIONS). FINE AGGREGATE SHALL MEET THE FOLLOWING GRADATION REQUIREMENTS:

SIEVE SIZE	PERCENT PASSING BY WEIGHT
3/8 INCH	100
No. 4	95 - 100
No. 16	45 - 80
No. 50	10 - 30
No. 100	2 - 10
No. 200 (FINES)	0 - 3

FINE AGGREGATE FILL SHALL BE COMPACTED IN MAXIMUM 9-INCH-THICK LOOSE LIFTS TO AT LEAST 95 PERCENT OF THE MAXIMUM DRY DENSITY DETERMINED IN ACCORDANCE WITH ASTM D1557 (MODIFIED AASHTO COMPACTION)

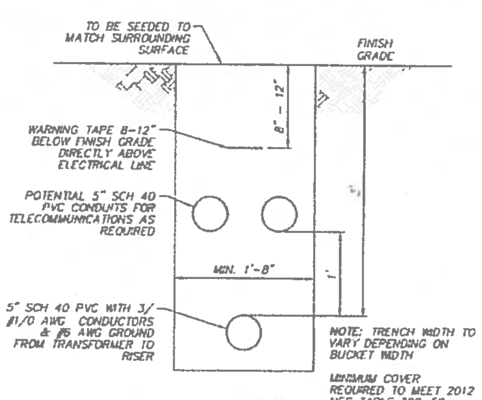

AC CONDUIT TRENCH DETAIL
(NOT TO SCALE)

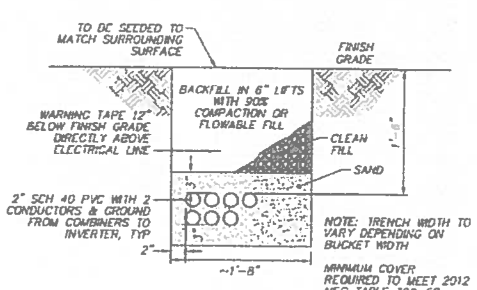

DC CONDUIT TRENCH DETAIL
(NOT TO SCALE)

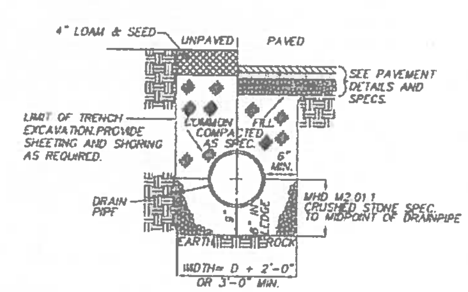

STORM DRAIN TRENCH DETAIL
(NOT TO SCALE)

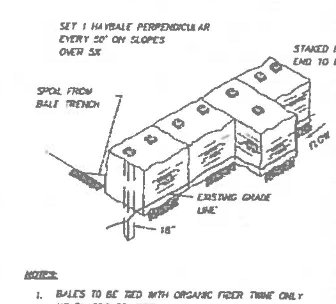

NOTES:

1. BALES TO BE TIED WITH ORGANIC FIBER TWINE ONLY NO PLASTIC OR WIRE.
2. HAYBALLS TO BE SECURED WITH A MINIMUM OF TWO (2) 1" x 1" WOODEN STAKES PER BALE DRIVEN 18" MIN. INTO GRADE.

TYPICAL HAYBALE DETAIL
(NOT TO SCALE)

APPROVED BY:
GRAFTON PLANNING BOARD

DATE

REVISIONS		
6.06.13	ADDRESS TOWN & GRAVES COMMENTS	ACC
DATE	DESCRIPTION	BY

6/6/13

SITE DETAIL SHEET 1
LOCATED IN
GRAFTON, MASSACHUSETTS
(WORCESTER COUNTY)
PREPARED FOR
BLUEWAVE CAPITAL, LLC

MERIDIAN ASSOCIATES
500 CUMMINGS CENTER, SUITE 5950, BEVERLY, MASSACHUSETTS 01915, TELEPHONE: (978) 299-0447
69 MILK STREET, SUITE 302, WESTBOROUGH, MASSACHUSETTS 01581, TELEPHONE: (508) 871-7030
WWW.MERIDIANASSOC.COM

DESIGNED BY: A.CHRISTIE CHECKED BY: R.WAITT

DATE: MAY 13, 2013
SCALE: AS NOTED
SHEET No. 4 OF 10
PROJECT No. 5540

DWG No. 5540-SITE

Copyright © by Meridian Associates, Inc. All rights reserved.

DWG FILE: 5540-SITE.dwg 8:53am PLOTTED: Jun 07, 2013 achristie

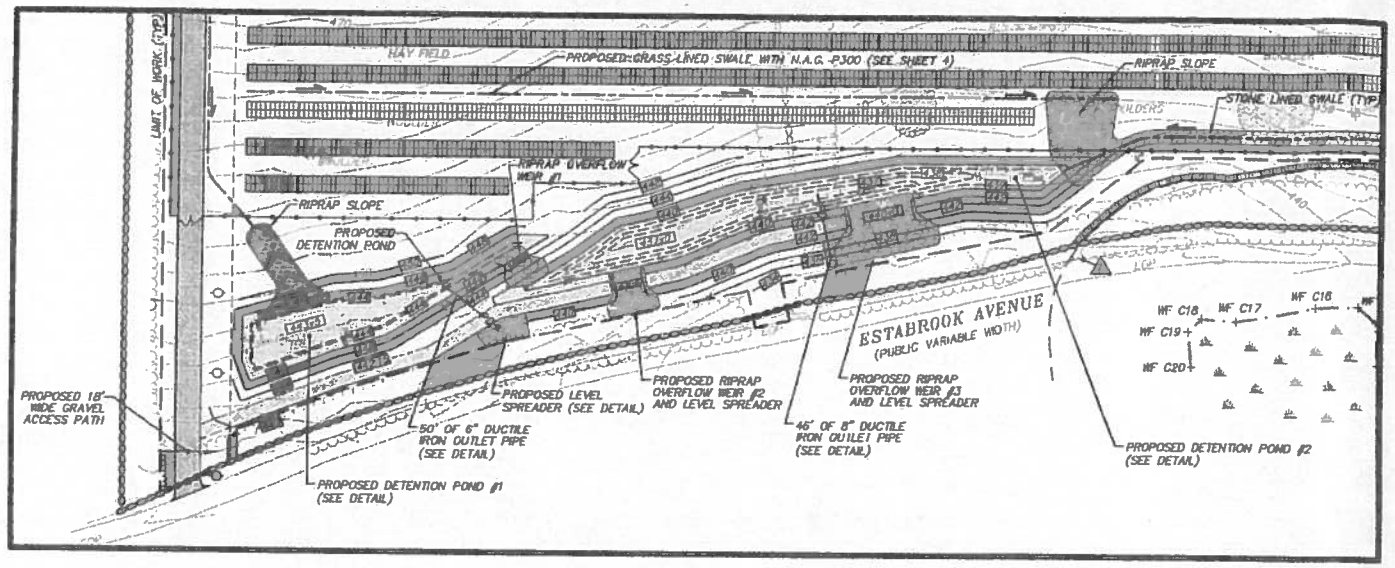

30 0 30 60 120

GRAPHIC SCALE
SCALE 1"=60'

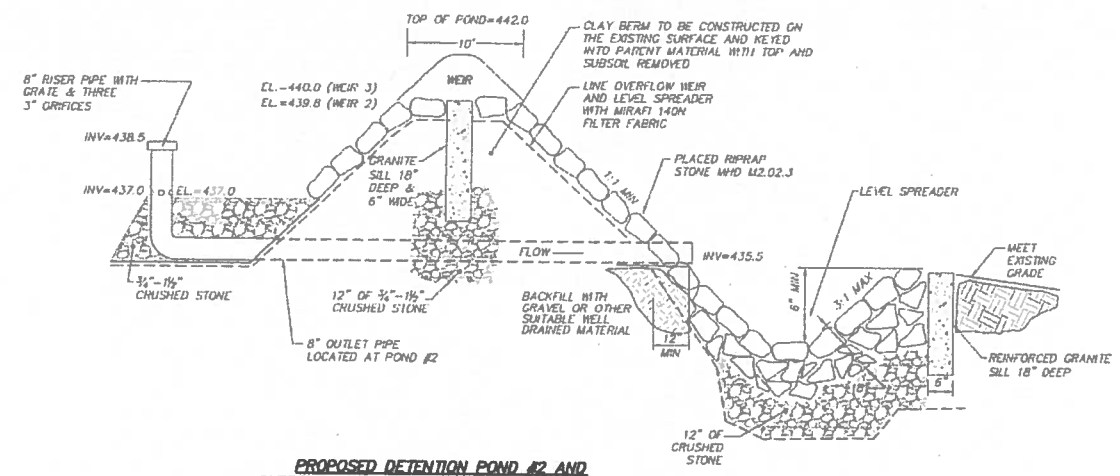

PROPOSED DETENTION POND #2 AND OVERFLOW WEIR WITH LEVEL SPREADER DETAIL
(NOT TO SCALE)

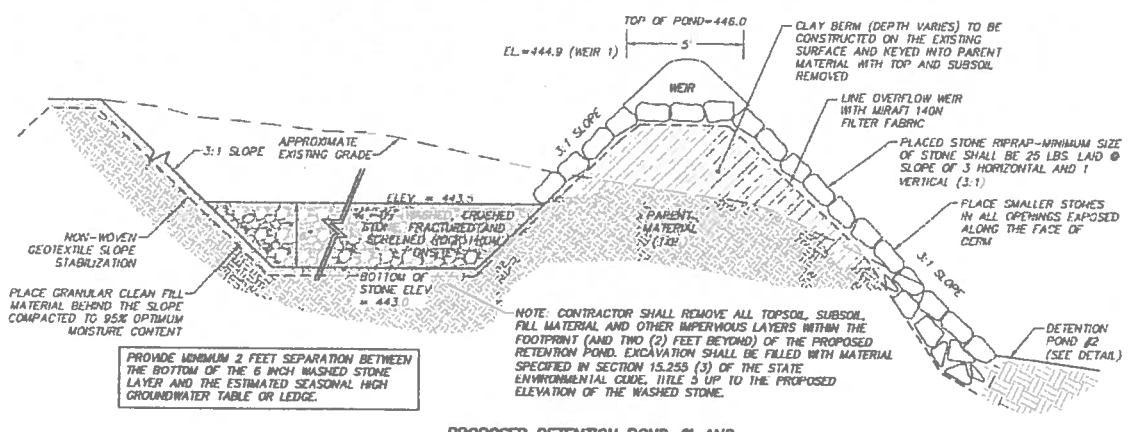

PROVIDE MINIMUM 2 FEET SEPARATION BETWEEN THE BOTTOM OF THE 6 INCH WASHED STONE LAYER AND THE ESTIMATED SEASONAL HIGH GROUNDWATER TABLE OR LEDGE.

PROPOSED DETENTION POND #1 AND OVERFLOW WEIR DETAIL
(NOT TO SCALE)

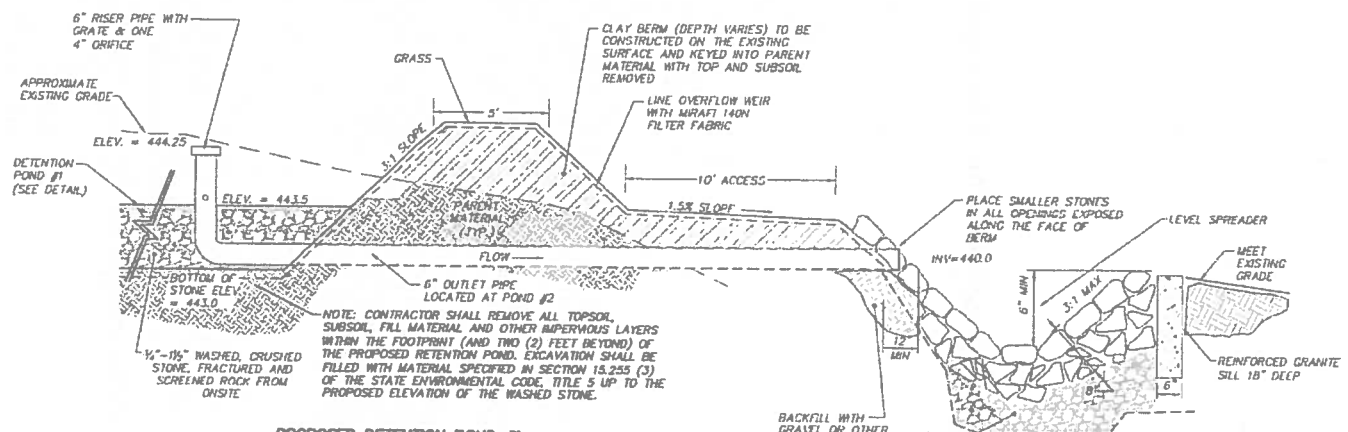

PROPOSED DETENTION POND #1 OUTLET PIPE DETAIL
(NOT TO SCALE)

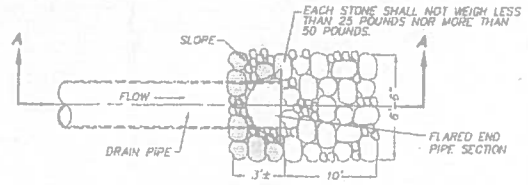

PLAN VIEW

NOTE: USE APRON DIMENSIONS SHOWN UNLESS OTHERWISE DEPICTED ON SITE PLANS

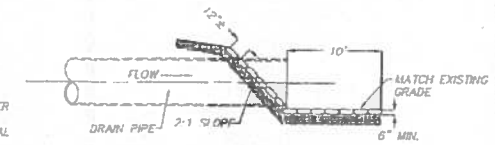

SECTION A–A

RIPRAP OUTLET APRON DETAIL
(NOT TO SCALE)

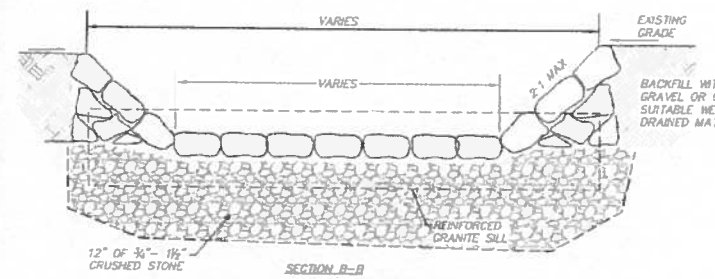

SECTION B–B

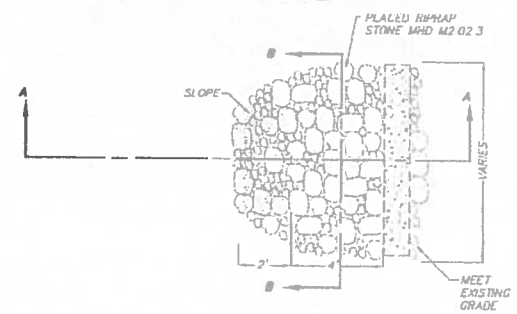

PLAN VIEW

TYPICAL LEVEL SPREADER
(NOT TO SCALE)

APPROVED BY:
GRAFTON PLANNING BOARD

DATE:

REVISIONS			
DATE	DESCRIPTION	BY	ACC
6.06.13	ADDRESS, TOWN & GRAFCS COMMENTS		

6/6/13

SITE DETAIL SHEET 2
LOCATED IN
GRAFTON, MASSACHUSETTS
(WORCESTER COUNTY)
PREPARED FOR
BLUEWAVE CAPITAL, LLC

MERIDIAN ASSOCIATES
500 CUMMINGS CENTER, SUITE 5930
BEVERLY, MASSACHUSETTS 01915
TELEPHONE: (978) 922-8031
69 MILK STREET, SUITE 302
WESTBOROUGH, MASSACHUSETTS 01581
TELEPHONE: (508) 871-7030
WWW.MERIDIANASSOC.COM

DESIGNED BY: A CHRISTIE
CHECKED BY: R WALTI

DATE: MAY 13, 2013
SCALE: AS NOTED
SHEET No. 5 OF 10
PROJECT No. 5540

DWG FILE: 5540-SITE.dwg 8:53am PLOTTED: Jun 07, 2013 achristie

DWG. No. 5540-SITE

Copyright © by Meridian Associates, Inc. All rights reserved.

NOTES:

1. THE TOPOGRAPHY, SITE DETAIL & SURFACE IMPROVEMENTS DEPICTED HEREON WERE OBTAINED FROM AN INSTRUMENT SURVEY CONDUCTED ON THE GROUND BY CHAPPELL ENGINEERING ASSOCIATES, LLC ON APRIL 1-3, 2013 AND PREPARED BY MARK SANTORA PE, INC. ON APRIL 26, 2013.
2. EXISTING GROUND WITHIN THE PROPOSED CHAINLINK FENCE TO BE CLEARED, STUMPED AND RE-GRADED TO ELIMINATE MINOR SURFACE DISTURBANCES. RE-GRADING OF THE ENTIRE SITE IS NOT PROPOSED OR NECESSARY. RE-VEGETATION OF THE SITE SHALL BE ESTABLISHED WITH LOW GROWTH GROUND COVER.
3. THE PROPOSED LIMIT OF WORK LINE ALSO DEPICTS THE EXTENT OF TREE CLEARING TO BE PERFORMED ON THE PROJECT SITE. NO TREES OUTSIDE THE DESIGNATED LIMIT OF WORK LINE ARE TO BE REMOVED BY THE CONTRACTOR.
4. COMMON FILL (SITE GRADING AREAS) SHALL CONSIST OF MINERAL SOIL SUBSTANTIALLY FREE FROM ORGANIC MATERIALS, LOAM, WOOD TRASH AND OTHER OBJECTIONABLE MATERIALS WHICH MAY BE COMPRESSIBLE OR WHICH CANNOT BE PROPERLY COMPACTED. SELECT COMMON FILL SHALL NOT CONTAIN STONES LARGER THAN 3-IN. IN LARGEST DIAMETER AND SHALL HAVE A MAXIMUM OF 25% PASSING THE NO. 40 SIEVE AND A MAXIMUM OF 20% PASSING THE NO. 200 SIEVE. SELECT COMMON FILL SHALL NOT CONTAIN CRUSHED BLOCKS, BROKEN CONCRETE, MASONRY RUBBLE OR OTHER SIMILAR MATERIALS. IT SHALL HAVE PHYSICAL PROPERTIES SUCH THAT IT CAN BE READILY SPREAD AND COMPACTED DURING TRAFFIC. SNOW, ICE AND FROZEN SOIL WILL NOT BE PERMITTED. SOIL EXCAVATED FROM THE STRUCTURE AREAS AND WHICH MEETS THE ABOVE REQUIREMENTS MAY BE USED.
5. SELECT COMMON FILL (ROADWAY AREAS) SHALL BE PLACED IN LAYERS HAVING A MAXIMUM THICKNESS OF 8 IN. MEASURED BEFORE COMPACTION. EACH LAYER OF FILL SHALL BE COMPACTED TO AT LEAST 95 PERCENT OF MAXIMUM DRY DENSITY DETERMINED BY THE ASTM D1557. COMPACTION OF STRUCTURAL FILL SHALL CONSIST OF FULLY LOADED TEN WHEEL TRUCKS, A TRACTOR DOZER WEIGHING AT LEAST 30,000 LBS AND OPERATING AT FULL SPEED, A HEAVY VIBRATORY ROLLER OR OTHER METHOD ONLY AS APPROVED BY THE ENGINEER. COMPACTION OF SELECT COMMON FILL IN CONFINED AREAS ADJACENT TO STRUCTURES SHALL BE ACCOMPLISHED BY HAND OPERATED VIBRATORY EQUIPMENT OR MECHANICAL TAMPERS APPROVED BY THE ENGINEER. AS A MINIMUM, COMPACTION OF SELECT COMMON FILL SHALL CONSIST OF FOUR COVERAGES OF THE APPROVED EQUIPMENT.
6. SITE PREPARATION SHALL INCLUDE CLEARING, GRUBBING, DELETERIOUS SOILS, VEGETATION AND DEBRIS. ALL TREES, STUMPS, BRUSH, SHRUBS, ROOTS, GRASS, WEEDS, RUBBISH, STONES LARGER THAN 2-IN. IN THE LARGEST DIAMETER AND OTHER OBJECTIONABLE MATERIAL SHALL BE REMOVED AND DISPOSED OF FROM AREAS TO BE FILLED AND COMPACTED. AREAS OUTSIDE OF THE LIMITS OF WORK SHALL BE PROTECTED FROM DAMAGE AND NO EQUIPMENT OR MATERIALS SHALL BE STORED IN THESE AREAS. NO STUMPS, TREES, LIMBS, OR BRUSH SHALL BE BURIED IN ANY FILLS OR EMBANKMENTS.
7. EROSION AND SEDIMENT CONTROL, BOTH DURING AND AFTER CONSTRUCTION, SHALL BE PROVIDED AS REQUIRED TO RETAIN SEDIMENT ONSITE, AND TO CONTROL EROSION OF EMBANKMENTS, TEMPORARY AND FINAL EXPOSED SLOPES AND TEMPORARY MATERIAL STOCKPILES. SILT FENCES, CHECK DAMS, DRAINAGE DITCHES OR SWALES, TEMPORARY SEEDING, AND PRE-MANUFACTURED TEXTILES, GEOMEMBRANES, GEOGRID, CELLULAR GEOWEB, ETC., SHALL BE UTILIZED AS APPROPRIATE. EROSION AND SETTLEMENT CONTROL MEASURES SHALL BE IN ACCORDANCE WITH ALL PERMITS AND CODES AND THIS SPECIFICATION. DURING THE EXCAVATION OF THE WORK AT THE SITE, OPERATIONS SHALL BE CONTINUOUSLY MONITORED TO AVOID THE OCCASION OF CONDITIONS THAT COULD LEAD TO EXCESSIVE EROSION OF SOIL WITH SURFACE RUNOFF FROM THE WORK AREAS. CONTROLS SHALL BE PROVIDED TO PROTECT THE WATER QUALITY AND SHALL BE IN ACCORDANCE WITH PROJECT DOCUMENTS AND ALL LOCAL, STATE AND FEDERAL LAWS AND REGULATIONS. EROSION CONTROL MEASURES SHALL BE EMPLOYED TO REDUCE EROSION OF SLOPES AND SILTATION OF OFF-SITE OUTFALLS AND TRIBUTARIES.
8. UPON SIGNS OF CONCENTRATED FLOW BY EVIDENCE OF GULLYING OR RILLING IN DISTURBED AREAS, HAYBALES SHALL BE PLACED IN THESE AREAS, SPACED EVERY 50' IN THE UPGRADIENT SLOPE.
9. ALL MATERIALS (I.E. STONE, PANELS) WILL BE OFFLOADED AND STORED WITHIN THE PROPOSED ARRAY FIELD.
10. ALL DISTURBED AREAS SHALL BE RE-ESTABLISHED WITH "SOLAR FARM SEED MIX", OR APPROVED EQUAL (SEE NOTES DEPICTED HEREON).

GENERAL SEQUENCE OF CONSTRUCTION:

1. CONTACT DIGSAFE (888.344.7233) AND OBTAIN CLEARANCE AT LEAST 72 HOURS BEFORE BEGINNING ANY EXCAVATION OUTSIDE THE LIMIT OF WASTE.
2. ESTABLISH EROSION AND SEDIMENTATION CONTROL MEASURES AROUND AREAS OF DISTURBANCE AND MAINTAIN THROUGHOUT CONSTRUCTION IN ACCORDANCE WITH LOCAL REQUIREMENTS. PERFORM INSPECTIONS, REPAIR IF NECESSARY, AND DOCUMENT AFTER EACH PRECIPITATION EVENT OF 0.5-INCHES OR GREATER.
3. REMOVE SECTION OF EXISTING STONE WALL (SEE PLANS).
4. PRIOR TO CONSTRUCTION, THE CONTRACTOR SHALL CONSTRUCT THE PRIMARY AND SECONDARY TEMPORARY GRAVEL CONSTRUCTION ENTRANCE/EXIT PAD AT ESTABROOK AVENUE. THE PAD SHALL CONSIST OF 1.5"-2" COARSE AGGREGATE WITH DIMENSIONS OF 50' (LENGTH) x 15' (WIDTH) x 6" (DEPTH) AND SET ON GEOTEXTILE FABRIC TO STABILIZE FOUNDATION (ESPECIALLY IMPORTANT WHERE WETNESS IS ANTICIPATED).
5. SITE PREPARATION SHALL INCLUDE CLEARING, GRUBBING AND REMOVAL OF EXISTING VEGETATION AND DEBRIS. ALL TREES, STUMPS, BRUSH, SHRUBS, ROOTS, GRASS, WEEDS, RUBBISH, STONES LARGER THAN 2-IN. IN THE LARGEST DIAMETER AND OTHER OBJECTIONABLE MATERIAL SHALL BE REMOVED AND DISPOSED OF FROM AREAS TO BE FILLED AND COMPACTED. AREAS OUTSIDE OF THE LIMITS OF WORK SHALL BE PROTECTED FROM DAMAGE AND NO EQUIPMENT OR MATERIALS SHALL BE STORED IN THESE AREAS. NO STUMPS, TREES, LIMBS, OR BRUSH SHALL BE BURIED IN ANY FILLS OR EMBANKMENTS.
6. CONSTRUCT GRAVEL ACCESS ROAD AROUND PERIMETER OF SOLAR ARRA AND CONNECT TO EXISTING GRAVEL ACCESS ROAD TO BE EXPANDED.
7. CONSTRUCT ALL SWALES AND DETENTION BASINS (SHOWN ON PLANS).
8. REPAIR UNEVEN AREAS WITHIN LIMITS OF THE SOLAR DEVELOPMENT, AS NECESSARY TO CREATE A UNIFORM GROUND SURFACE. GENERAL TOLERANCE FOR ALLOWABLE GROUND SLOPE IS TWO FOOT VERTICAL CHANGE OVER A 20 FOOT HORIZONTAL RUN (NOTE THAT THIS REFERS TO THE ALLOWABLE LONGITUDINAL SLOPE (I.E., ALONG THE CONTOUR) AND NOT THE INCLINATION OF THE EXPOSURE (I.E., PERPENDICULAR TO THE CONTOUR))
9. UPON SIGNS OF CONCENTRATED FLOW BY EVIDENCE OF GULLYING OR RILLING IN DISTURBED AREAS, HAYBALES SHALL BE PLACED IN THESE AREAS, SPACED EVERY 50' IN THE UPGRADIENT SLOPE.
10. ESTABLISH A TEMPORARY CONSTRUCTION SUPPORT AREA AND MATERIAL STAGING AREA AT THE NORTHERN CORNER OF THE ARRAY AS DEPICTED ON THE PLANS PRIOR TO THE DELIVERY OF MODULAR UNITS.
11. RECEIVE AND STAGE MATERIALS. RE-LOCATE COMPONENTS (E.G., CONDUIT, WIRING AND POSTS) TO SOLAR DEVELOPMENT AREA AS THEY ARE REQUIRED.
12. MOUNT THE PV PANELS ON FRAME AT THE SPECIFIED ORIENTATION AND EXPOSURE (TYPICALLY A 25 DEGREE ORIENTATION FROM LEVEL IN A SOUTH FACING DIRECTION) AND ADJUST AS NECESSARY.
13. ALL DISTURBED AREAS WITHIN THE SOLAR ARRAY AREA SHALL BE RE-ESTABLISHED WITH "SOLAR FARM SEED MIX" (SEE NOTES ON DETAIL SHEET).
14. RUN UNDERGROUND ELECTRICAL CONDUIT TO PV FRAMES AND INSTALL PANEL WIRING.
15. INSTALL PV COMBINER BOXES WITH FLEXIBLE CONNECTIONS TO CONNECT PV PANELS TO CONDUIT.
16. CONSTRUCT CONCRETE PADS, INSTALL AND CONNECT GROUND MOUNTED INVERTER/TRANSFORMER STATIONS. A DISCONNECT LOCATION WILL BE ON THE OUTSIDE ON THE NORTHWEST SIDE OF THE PLATFORM.
17. CONSTRUCT ALL 7' HIGH CHAIN LINK FENCE AND GATES (SHOWN ON PLAN) WITH KNOX BOXES.
17. CONSTRUCT FIELDSTONE WALL AT OPENING (SEE PLANS)
18. INSTALL OVERHEAD POLES (SHOWN ON PLAN) AT INTERCONNECTION POINT. INSTALL WIRING. INSTALL MASTER SHUTOFF ON RISER WITH GAMS-OPERATED LOADBREAK.
19. OBTAIN CERTIFICATE OF COMPLIANCE FROM CONSERVATION COMMISSION AND REMOVE ALL HAYBALES FROM THE SITE.

ESTABLISHED GUIDELINES FOR ERNST "SOLAR FARM SEED MIX"
(ERNST CONSERVATION SEEDS)

GENERAL:
ERNST "SOLAR FARM SEED MIX" (#188) IS A SLOW GROWING SEED MIXTURE DESIGNED FOR, BUT LIMITED TO, USE IN SOLAR ARRAY LAYOUT APPLICATIONS.

SPECIES LIST:
- 30% CREEPING RED FESCUE (FESTUCA RUBRA)
- 30% SHEEP FESCUE, "WHISPER" (FESTUCA OVINA, "WHISPER")
- 15% HARD FESCUE, "NORDIC" (FESTUCA OVINA VAR. DURIUSCULA (T. LONGIFOLIA), "NORDIC")
- 10% ANNUAL RYEGRASS (LOLIUM MULTIFLORUM (L. PERENNE VAR. ITALICUM))
- 7.5% HARD FESCUE, "CHARDON" (FESTUCA BREVIPILA, "CHARDON")
- 7.5% HARD FESCUE, "BEACON" (FESTUCA BREVIPILA, "BEACON")

SEED BED PREPARATION:
REMOVE ALL INVASIVE SPECIES, TILL EXISTING SOIL AND RAKE SMOOTH.

SEED APPLICATION AND RATE:
THE IDEAL PLANTING DEPTH IS 1/4-1/2". UNDER IDEAL CONDITIONS SEEDS LAYING ON THE SURFACE WILL GERMINATE. RECOMMENDED APPLICATION RATE FOR SEEDING IS 6 LBS PER 1,000 SQUARE FEET. AFTER SEEDING, RAKE SEED INTO THE SOIL AND ROLL SOIL TO ENSURE GOOD SEED TO SOIL CONTACT, BUT DO NOT CRUSH SOIL AGGREGATES OR OVERLY COMPACT SOIL. IF RAIN, OR LACK OF RAINING, HAPPENS AT THE TIME OF SEEDING THE SEED BED SHOULD BE IRRIGATED LIGHTLY FOR A PERIOD OF 7-10 DAYS TO PROMOTE GERMINATION.

SEEDING DATES:
FOR FALL INSTALLATION, SEED BETWEEN AUGUST 15 AND SEPTEMBER 10. FOR SPRING INSTALLATION, SEED AS EARLY AS POSSIBLE, SOMETIME BETWEEN APRIL 15 AND MAY 10

FERTILIZATION AND SOIL REQUIREMENTS:
THE USE OF FERTILIZER WHEN ESTABLISHING NATIVE PLANT SPECIES IS NOT RECOMMENDED. THE USE OF FERTILIZERS CAN PROMOTE THE GROWTH OF WEED SPECIES AND CAN LEAD TO CONTAMINATION OF NEARBY WETLAND AREAS. IT IS RECOMMENDED TO ADD ORGANIC MATERIAL TO ALL DISTURBED AREAS AFTER THE TOPSOIL HAS BEEN REMOVED OR DEPLETED. THIS WILL IMPROVE SOIL FERTILITY.

GENERAL MAINTENANCE:
GRASSY WEEDS OR PERSISTENT PERENNIALS CAN RE-ESTABLISH IN THESE SOIL TYPES. WEED CONTROL IS CRITICAL IN THE FIRST AND SECOND YEARS AFTER PLANTING. APPLICATIONS OF SPECIFIC HERBICIDES PROVIDED BY LOCAL VENDORS CAN HELP CONTROL GRASSY AND PERSISTENT WEED SPECIES, SUCH AS DANDELIONS, THISTLE, ETC.

ESTABLISHMENT:
USUALLY, A NATIVE ESTABLISHMENT TAKES 2-3 YEARS TO BECOME FULLY RECOGNIZABLE. DURING THIS PERIOD, VIGILANT WEED CONTROL (MOWING HIGH AND/OR AND HERBICIDE APPLICATION) IS NECESSARY TO ASSIST IN ESTABLISHMENT. RE-SEEDING MAY BE REQUIRED UNTIL THE SEED MIX CAN ESTABLISH ITSELF. IRRIGATION MAY BE NECESSARY IF PRECIPITATION IS INFREQUENT, CONDITIONS ARE HOT WITH HIGH SUNLIGHT INTENSITY, AND/OR SOILS DO NOT HOLD WATER (I.E., SANDY SOILS).

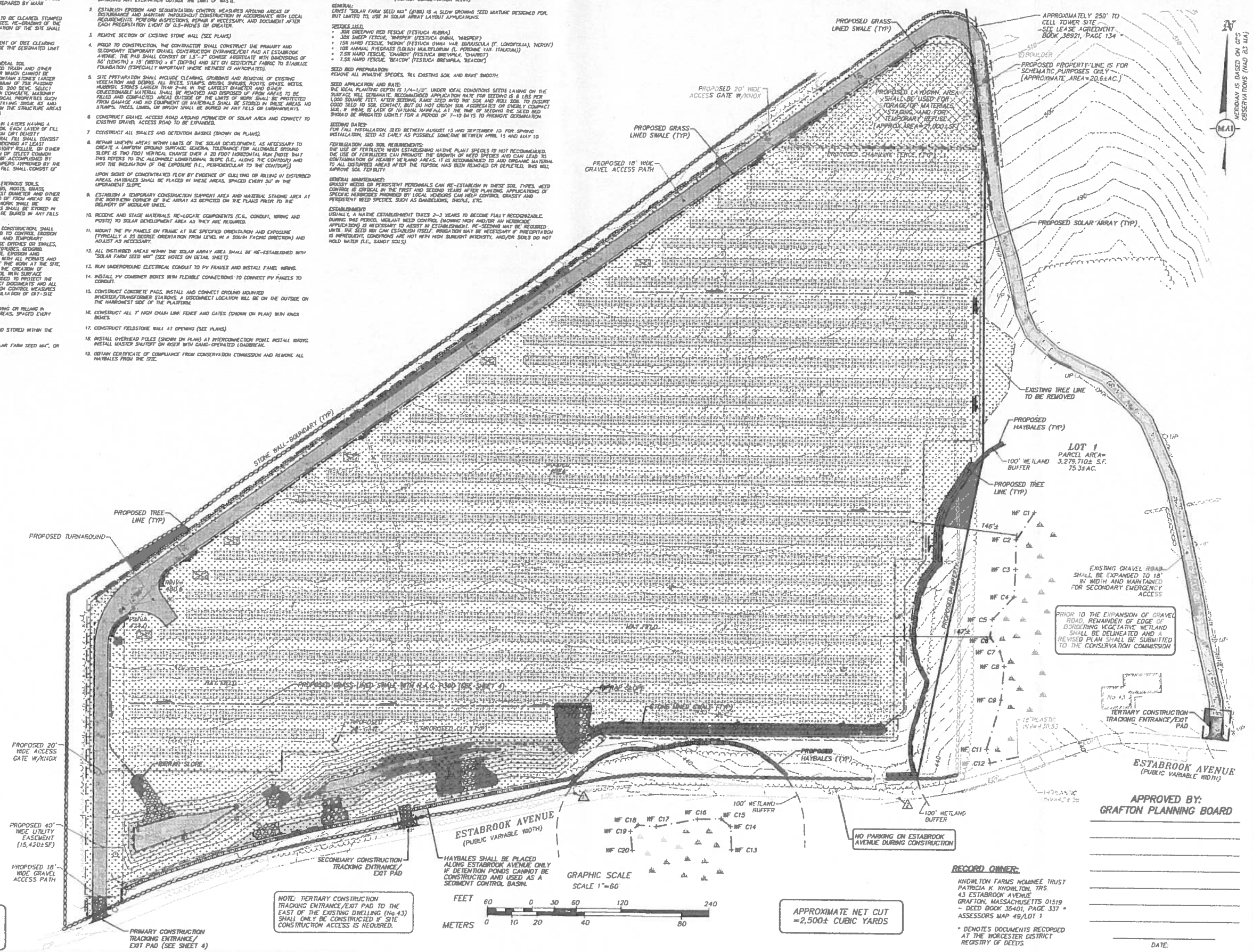

LEGEND:

- TWO FOOT CONTOUR
- 480 TEN FOOT CONTOUR
- WETLAND LINE
- +WF C2 WETLAND FLAG
- LIMIT OF BUFFER ZONE
- TREE LINE
- STONE WALL-BOUNDARY
- STONE WALL-INTERIOR
- GRAVEL ROAD
- EXPOSED LEDGE
- BOULDER
- DRAIN LINE
- OHW OVERHEAD WIRES
- TERMINUS UNKNOWN
- UTILITY POLE
- SOIL BORING
- BK. BOOK
- PG. PAGE
- TYP. TYPICAL
- INV. INVERT
- EOP EDGE OF PAVEMENT
- AC. ACRES
- S.F. SQUARE FOOT
- PROPOSED LIMIT OF WORK
- PROPOSED TREE LINE
- PROPOSED HAYBALES
- PROPOSED UTILITY POLE
- SOLAR FARM SEED MIX PLANTING AREA

REFER TO SHEET 3 FOR SITE PLAN AND GENERAL NOTES

NOTE: TERTIARY CONSTRUCTION TRACKING ENTRANCE/EXIT PAD TO THE EAST OF THE EXISTING DWELLING (No.43) SHALL ONLY BE CONSTRUCTED IF SITE CONSTRUCTION ACCESS IS REQUIRED.

APPROXIMATE NET CUT =2,500± CUBIC YARDS

RECORD OWNER:

KNOWLTON FARMS HOLMNEE TRUST
PATRICIA K. KNOWLTON, TRS
43 ESTABROOK AVENUE
GRAFTON, MASSACHUSETTS 01519
- DEED BOOK 35401, PAGE 337 *
ASSESSORS MAP 49/LOT 1

* DENOTES DOCUMENTS RECORDED AT THE WORCESTER DISTRICT REGISTRY OF DEEDS.

APPROVED BY:
GRAFTON PLANNING BOARD

DATE

DATE	DESCRIPTION	BY
6.06.13	ADDRESS TOWN & GRAVES COMMENTS	ACC

REVISIONS

STATE OF MASSACHUSETTS ROBERT A. WHITCHER No. 34776 PROFESSIONAL ENGINEER 6/6/13

EROSION & SEDIMENT CONTROL PLAN

LOCATED IN
GRAFTON, MASSACHUSETTS
(WORCESTER COUNTY)
PREPARED FOR
BLUEWAVE CAPITAL, LLC

MERIDIAN ASSOCIATES
500 CUMMINGS CENTER, SUITE 5950
BEVERLY, MASSACHUSETTS 01915
TELEPHONE: (978) 299-0447
69 MILK STREET, SUITE 302
WESTBOROUGH, MASSACHUSETTS 01581
TELEPHONE: (508) 871-7030
WWW.MERIDIANASSOC.COM

DESIGNED BY: A. CHRISTIE
CHECKED BY: R. WHITT

DATE: MAY 13, 2013
SCALE: 1"=60'
SHEET No. 6 OF 10
PROJECT No. 5540

DWG. No. 5540-ECP

DWG FILE: 5540-ECP.dwg 8:57am PLOTTED: Jun 07, 2013 achristie

© Copyright © by Meridian Associates, Inc. All rights reserved.

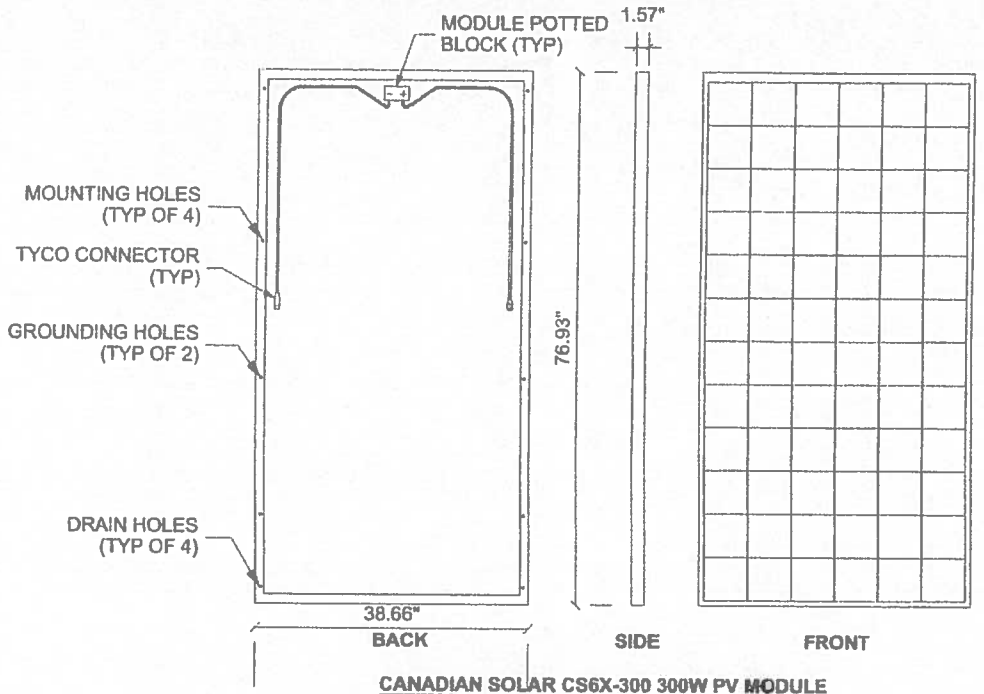

CANADIAN SOLAR CS6X-300 300W PV MODULE RATED ELECTRICAL SPECIFICATIONS (@ STC)

MAXIMUM POWER (Pmax)	300Wdc
Pmax TOLERANCE	+15% / -0%
VOLTAGE AT Pmax	36.3 Vdc
CURRENT AT Pmax	8.41 Adc
OPEN-CIRCUIT VOLTAGE (Voc)	44.80 Vdc
SHORT-CIRCUIT CURRENT (Isc)	8.97 Adc
MAXIMUM SYSTEM VOLTAGE	600 Vdc
SERIES FUSE RATING	15 Adc
WEIGHT	50.70 LBS

1 CANADIAN SOLAR 300W PV MODULE 0 6" 1' 2'

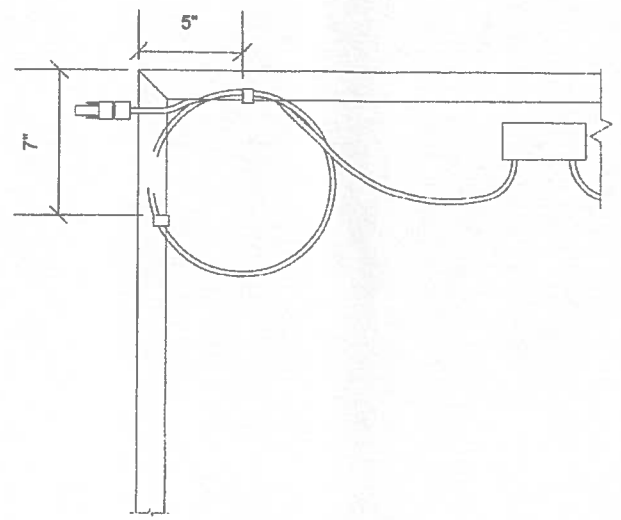

2 WIRE MANAGEMENT DETAIL 0 3" 6" 9"

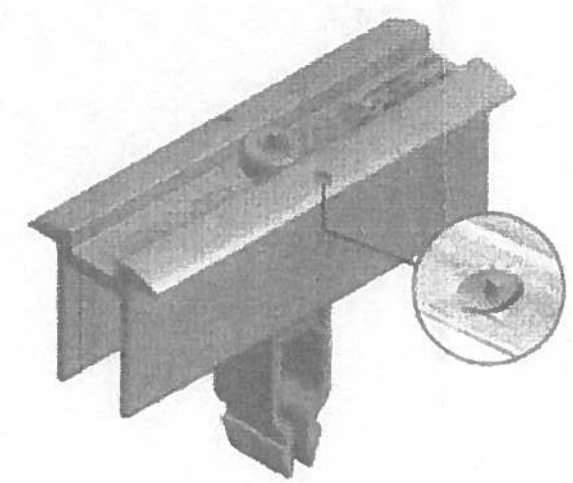

3 SCHLETTER RAPID GROUNDING MIDDLE CLAMP
NOT TO SCALE

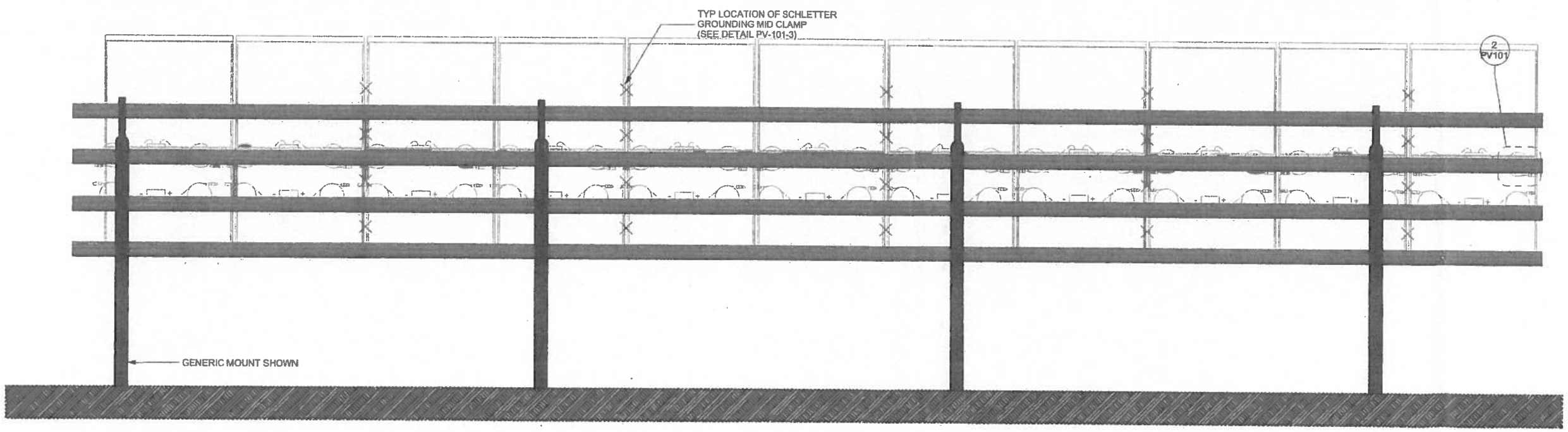

4 NORTH ELEVATION OF SCHLETTER 2X11 FS MOUNTING SYSTEM 0 1' 2' 3'

solar design associates
HARVARD, MA 01451-0242 tel: 978-456-0555
www.solardesignpt.com fax: 978-772-9713

BLUEWAVE
BOSTON, MA 02116 tel: 617.350.8620
www.bluewave-capital.com fax: 617.350.3443

THIS DRAWING IS FOR INFORMATION PURPOSES ONLY. CERTIFICATION OR VALIDATION IS TO BE DONE BY A PROFESSIONAL WITH EXPERTISE IN THE REQUIRED FIELD AND A LICENSE IN THE STATE THAT THE INSTALLATION WILL RESIDE. CERTIFICATION OR VALIDATION TO BE INCLUDED AS PART OF THE SUBMITTALS FOR PERMITTING OF THE OVERALL PROJECT.

BLUEWAVE CAPITAL LLC

SUBMISSION: PERMITTING
Friday, May 13, 2013

PROFESSIONAL STAMP

REVISION NOTES

MARK	DATE	DESCRIPTION
	6.06.13	NO REVISIONS TO THIS SHEET

CONTRACTOR: NAME, STREET, CITY/ST/ZIP, NOTES

BUILDING: NAME, STREET, CITY/ST/ZIP, NOTES

DRAWING

FILE NAME	BlueWave Permitting Details.pln
SCALE	AS SHOWN
DRAWN BY	TP DATE DRAFTED: 4/25/2013
CHECKED BY	PR, CPO, RE SHEET SIZE: ARCH D
DRAWING NO.	PV101
DRAWING TITLE	RACKING CONNECTION PLAN

SHEET 7 OF 10

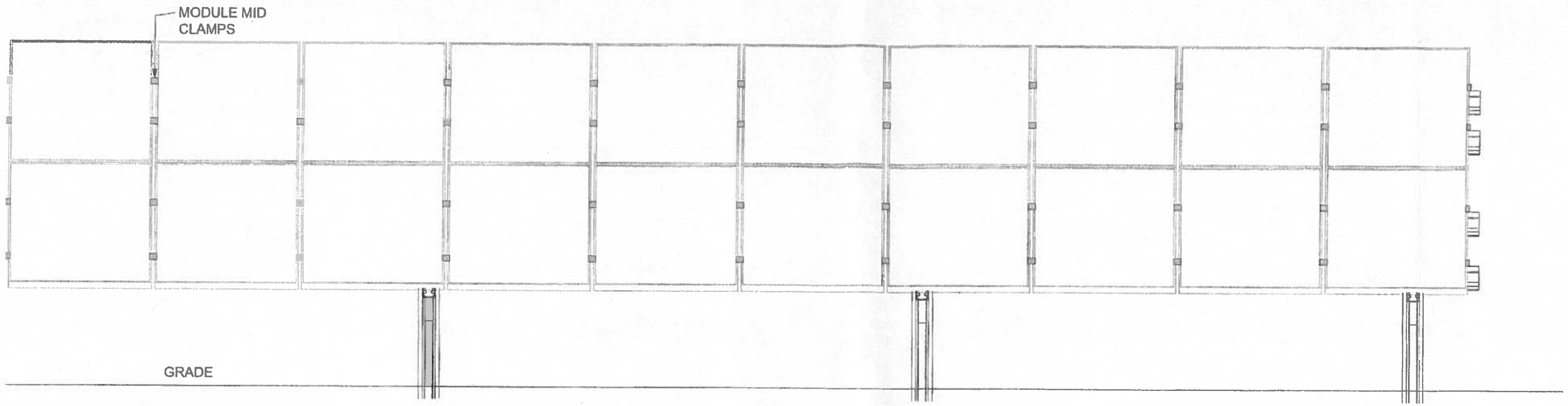

1 FRONT ELEVATION OF SCHLETTER RACK 0 1' 2' 3'

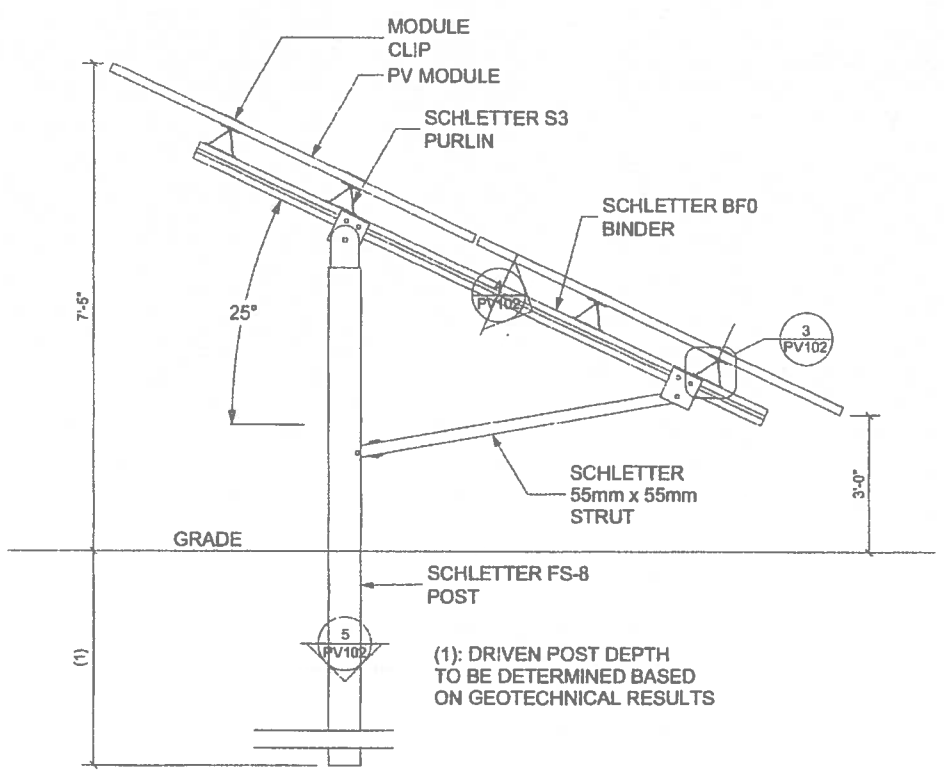

2 SECTION VIEW OF SCHLETTER RACK 0 1' 2' 3'

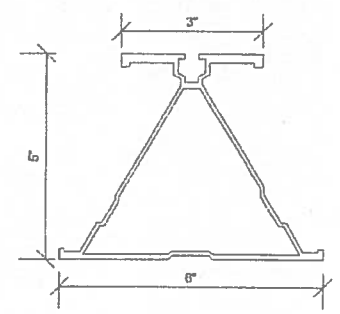

3 SCHLETTER S3 PURLIN 0 1" 2" 4"

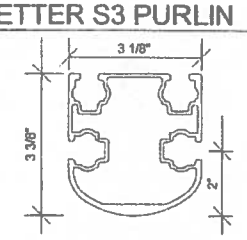

4 SCHLETTER BF0 BINDER 0 1" 2" 4"

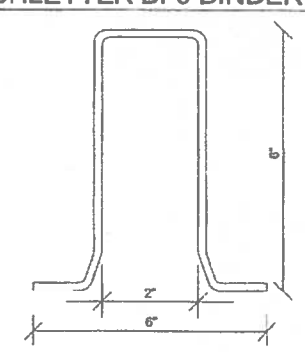

5 SCHLETTER FS-8 POST 0 1" 2" 4"

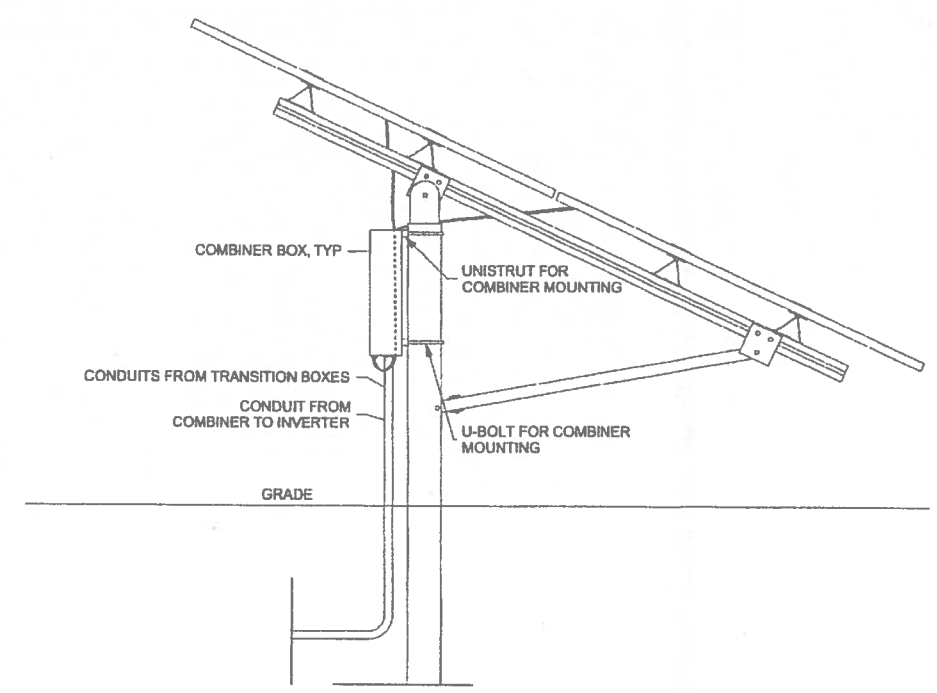

6 RACK SECTION WITH COMBINER, TYP 0 1' 2' 3'

solar design associates inc
HARVARD, MA 01451-0342 tel: 978-456-8055
www.solardesign.zero fax: 978-772-9715

BLUEWAVE
BOSTON, MA 02116 tel: 617.355.8620
www.bluewave-capital.com fax: 617.355.3443

THIS DRAWING IS FOR INFORMATION PURPOSES ONLY. CERTIFICATION OR VALIDATION IS TO BE DONE BY A PROFESSIONAL WITH EXPERTISE IN THE REQUIRED FIELD AND A LICENSE IN THE STATE THAT THE INSTALLATION WILL REFER. CERTIFICATION OR VALIDATION TO BE INCLUDED AS PART OF THE SUBMITTALS FOR PERMITTING OF THE OVERALL PROJECT

BLUEWAVE CAPITAL LLC

SUBMISSION: PERMITTING
Friday, May 13, 2013

PROFESSIONAL STAMP

REVISION NOTES

MARK	DATE	DESCRIPTION
	6.06.13	NO REVISIONS TO THIS SHEET

CONTRACTOR: NAME / STREET / CITY/ST/ZIP / NOTES

BUILDING: NAME / STREET / CITY/ST/ZIP / NOTES

DRAWING:

FILE NAME	BlueWave Permitting Details.pln
SCALE	AS SHOWN
DRAWN BY	TP — DATE DRAFTED: 4/25/2013
CHECKED BY	PR, CPO, RE — SHEET SIZE: ARCH D
DRAWING NO.	PV102
DRAWING TITLE	RACKING DETAIL

SHEET 8 OF 10

LARGE EQUIPMENT WEIGHT	
EQUIPMENT	WEIGHT
INVERTER	8750lbs
TRANSFORMER	5700lbs
ADD'L EQPT	1000lbs

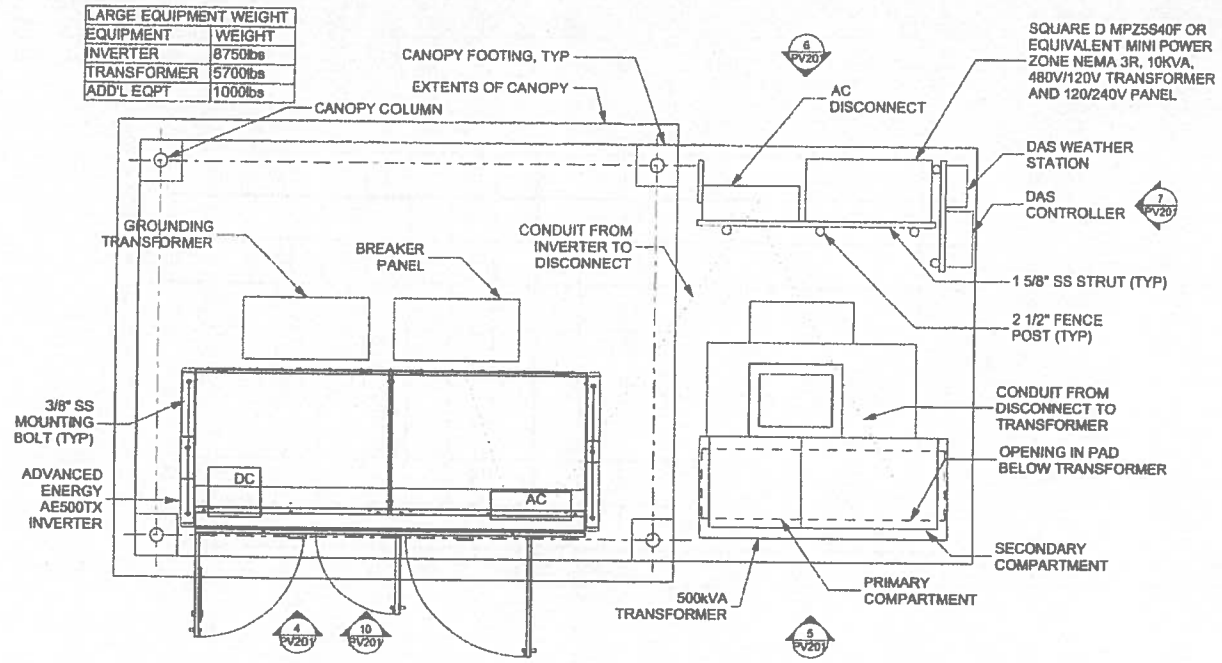

1 ELECTRICAL EQUIPMENT PAD PLAN VIEW

0 1' 2' 4'

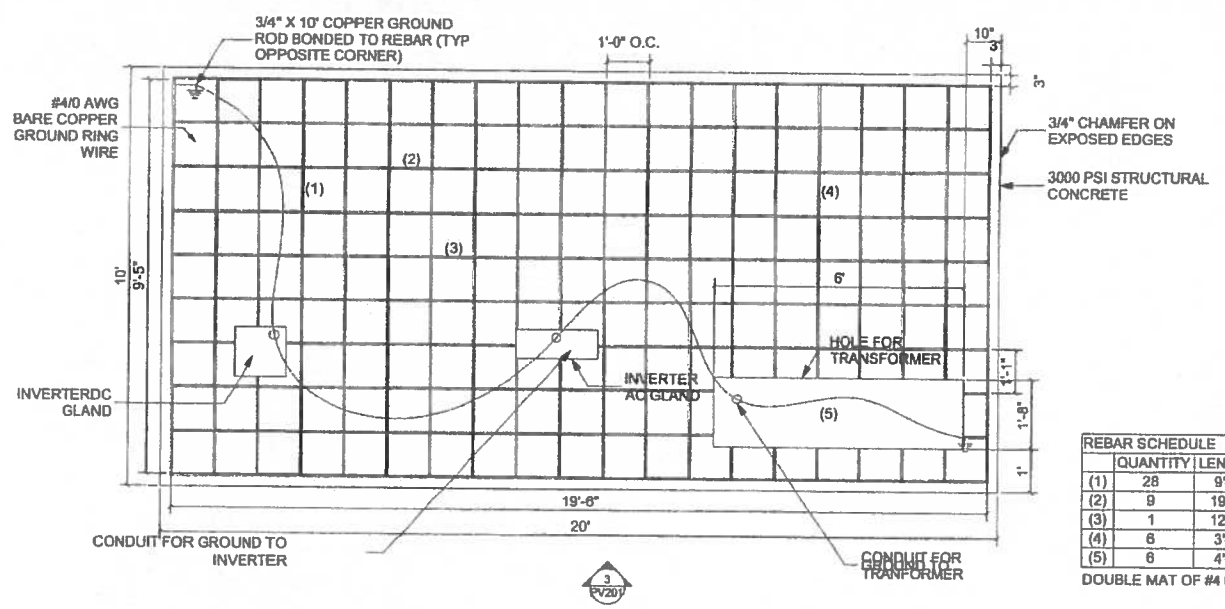

REBAR SCHEDULE		
	QUANTITY	LENGTH
(1)	28	9'-6"
(2)	9	19'-6"
(3)	1	12'-4"
(4)	6	3'-2"
(5)	6	4'-3"

DOUBLE MAT OF #4 REBAR

2 ELECTRICAL EQUIPMENT PAD REBAR AND GROUNDING PLAN

0 1' 2' 4'

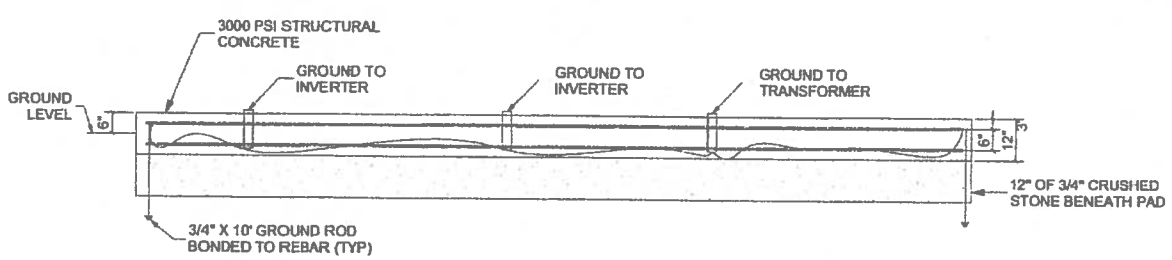

3 ELECTRICAL EQUIPMENT PAD SECTION VIEW

0 1' 2' 4'

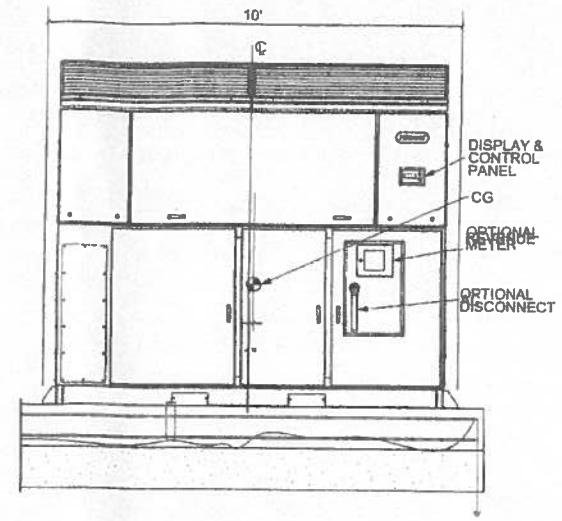

4 AE500TX INVERTER ELEVATION

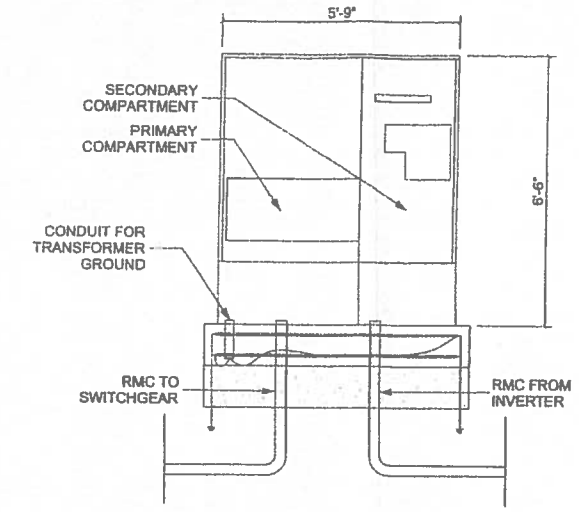

5 TRANSFORMER ELEVATION

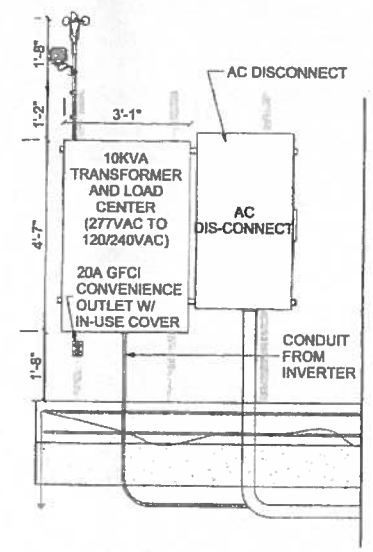

6 STRUT EQPT, SOUTH

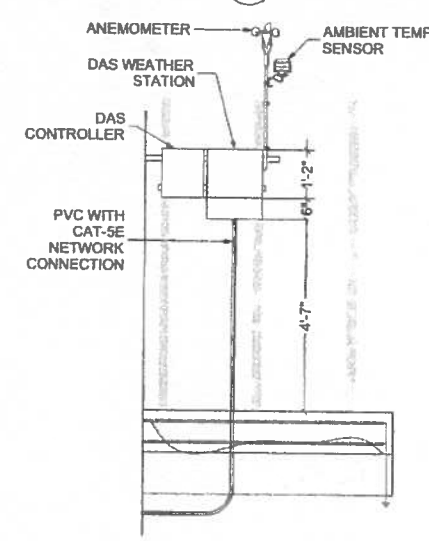

7 STRUT EQPT, NORTH

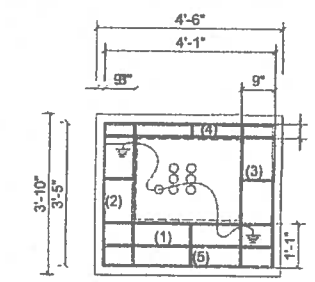

REBAR SCHEDULE		
	QUANTITY	LENGTH
(1)	10	4'-1"
(2)	8	3'-5"
(3)	4	9"
(4)	2	4"
(5)	2	1'-1"

DOUBLE MAT OF #4 REBAR

8 15kV SWITCH PAD PLAN

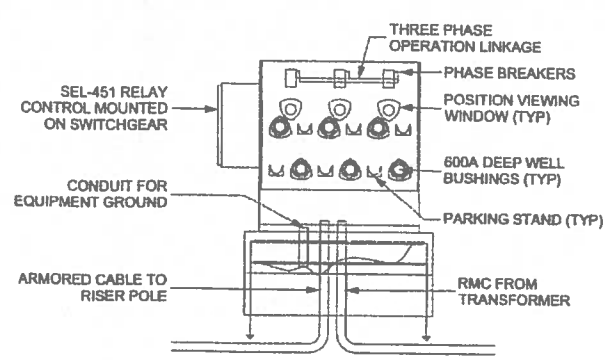

9 15kV SWITCH ELEVATION

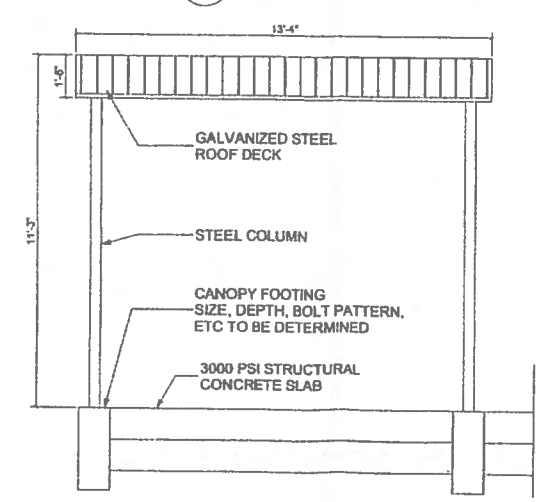

10 INVERTER SHADE CANOPY

solar design associates inc

HARVARD, MA 01451-0242 tel: 978-468-6855 www.solardesign.com fax: 978-772-9715

BLUEWAVE

BOSTON, MA 02116 tel: 617.353.0523 www.bluewave-capital.com fax: 617.350.3443

THIS DRAWING IS FOR INFORMATION PURPOSES ONLY. CERTIFICATION OR VALIDATION IS TO BE DONE BY A PROFESSIONAL WITH EXPERTISE IN THE REQUIRED FIELD AND LICENSE IN THE STATE THAT THE INSTALLATION WILL RESIDE. CERTIFICATION OR VALIDATION TO BE INCLUDED AS PART OF THE SUBMITTALS FOR PERMITTING OF THE OVERALL PROJECT

BLUEWAVE CAPITAL LLC

SUBMISSION: PERMITTING

Friday May 13, 2013

PROFESSIONAL STAMP

REVISION NOTES

MARK	DATE	DESCRIPTION
	6.06.13	NO REVISIONS TO THIS SHEET

CONTRACTOR: NAME / STREET / CITY/ST/ZIP / NOTES

BUILDING: NAME / STREET / CITY/ST/ZIP / NOTES

DRAWING:

FILE NAME	BlueWave Permitting Details.pln
SCALE	AS SHOWN
DRAWN BY	TP — DATE DRAFTED: 4/25/2013
CHECKED BY	PR, CPD, RE — SHEET SIZE: ARCH D
DRAWING NO.	PV201
DRAWING TITLE	INVERTER EQUIPMENT PLAN

SHEET 9 OF 10

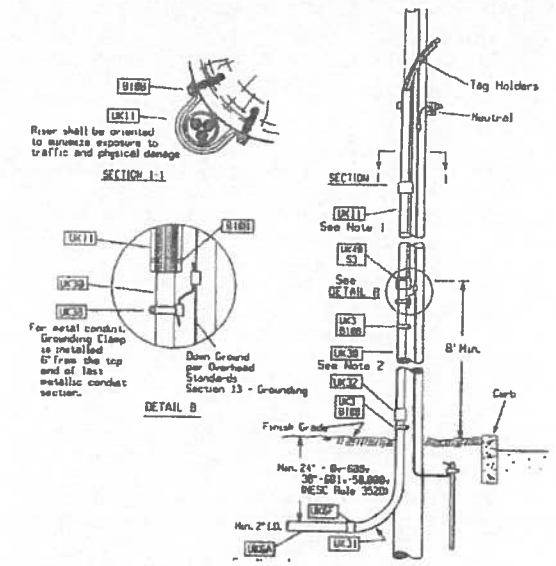

NOTES:
1. INSTALL RISER GUARD SECTIONS BELL-END DOWN.
2. THE SERVICE LATERAL CABLE, CONDUIT, GROUND CLAMP, AND SHORT SECTION OF GROUNDING CONDUCTOR SHALL BE FURNISHED BY THE CUSTOMER. NATIONAL GRID WILL INSTALL GROUND ROD AND COMPLETE BONDING REQUIREMENTS.
3. IF THE ENDS OF THE CUSTOMER OWNED SERVICE LATERAL CABLES ARE WITHOUT SUITABLE MOISTURE PREVENTING SEALS, (EG RUBBER CAPS OR TAPED) NATIONAL GRID WILL NOT ATTACH.
4. OMIT CONDUIT ON DIRECT BURIED INSTALLATIONS AND INSTALL A LEADER GUIDE (STD. ITEM UK49) IN PLACE OF THE CONDUIT ADAPTER (STD ITEM UK6F).
5. TO PREVENT INDUCTION HEATING OF THE METALLIC CONDUIT, DO NOT SEPARATE THE PHASE CONDUCTORS OF A THREE-PHASE CIRCUIT INTO SEPARATE CONDUITS.
6. ON POLES NOT ACCESSIBLE BY BUCKET TRUCK, THE NUMBER, SIZE, AND LOCATION OF RISER DUCTS OR GUARDS SHALL BE LIMITED TO ALLOWE ADEQUATE ACCESS FOR CLIMBING, PER NESC RULE 362B.

1 RISER POLE DETAIL
NOT TO SCALE

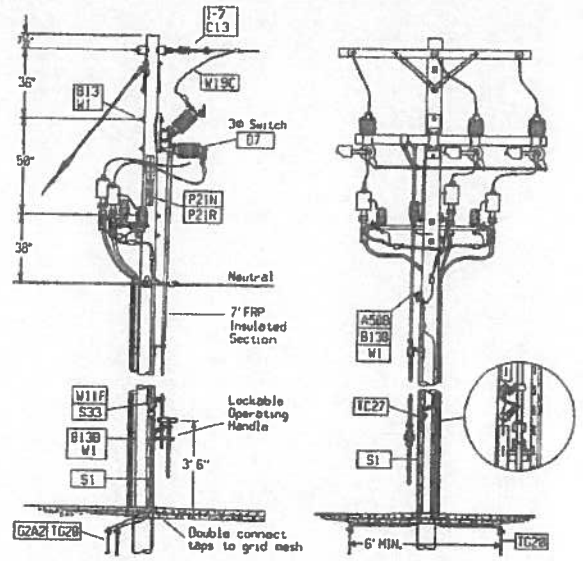

NOTES:
1. SURGE ARRESTERS SHALL BE INSTALLED ONTO THE SOURCE SIDE POLE WITHIN 300'. THE RISER TYPE SURGE ARRESTERS SHALL BE INSTALLED ONTO THE LOAD SIDE PROTECTING BOTH SWITCH AND TERMINATORS.
2. USE STAINLESS STEEL BOLTS (ITEM B8C) WHEN CONNECTING COPPER LUGS (ITEM C9C) TO SWITCH PADS
3. ON COVERED TAP CONDUCTORS, PROVIDE 6" OF BARE CONDUCTOR AT THE SWITCH TERMINALS FOR GROUNDING PURPOSES. USE 5/8" THRU BOLTS TO MOUNT OPERATING ROD GUIDES.
4. PRIMARY CONDUCTORS SHALL NEVER BE INSTALLED TO ONLY ONE SIDE OF THE SWITCH AS MAXIMUM DEADEND LOADING WILL BE EXCEEDED.
5. DO NOT INSTALL SWITCH ON A POLE WHERE THE CONSTRUCTION ANGLE IS GREATER THAN 20 DEGREES.
6. LIFTING STRAPS SHALL BE REMOVED AFTER INSTALLATION IS COMPLETE.
7. OPERATING MECHANISM SHALL BE LOCKED IN THE OPEN OR CLOSED POSITION.
8. SWITCH IDENTIFICATION MOUNTED VERTICALLY ON ROAD SIDE PROVIDING MAXIMUM VISIBILITY.

2 FUSED LOADBREAK POLE DETAIL AT RISER POLE
NOT TO SCALE

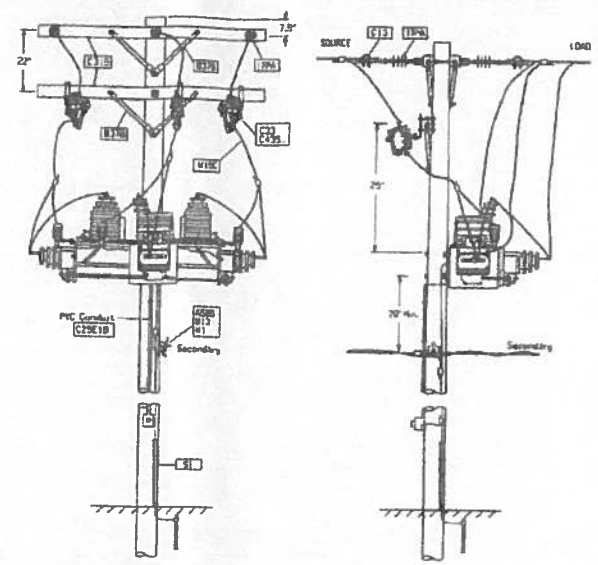

NOTES:
1. METERING EQUIPMENT SHALL BE SPECIFIED BY METERING ENGINEER.
2. METER SOCKET HEIGHT IS TO BE NO LESS THAN 3 FEET AND NO MORE THAN 6 FEET FROM GROUND TO CENTER OF METER UNLESS OTHERWISE SPECIFIED BY METER ENGINEER.

3 PRIMARY METERING POLE DETAIL AT POINT OF COMMON COUPLING
NOT TO SCALE

Figure 1 - Primary Guy for WYE Circuits

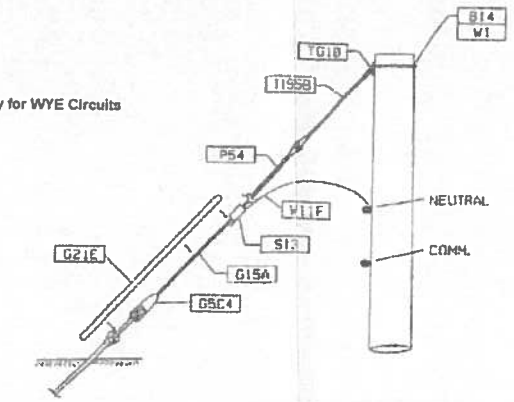

4 GUY DETAILS
NOT TO SCALE

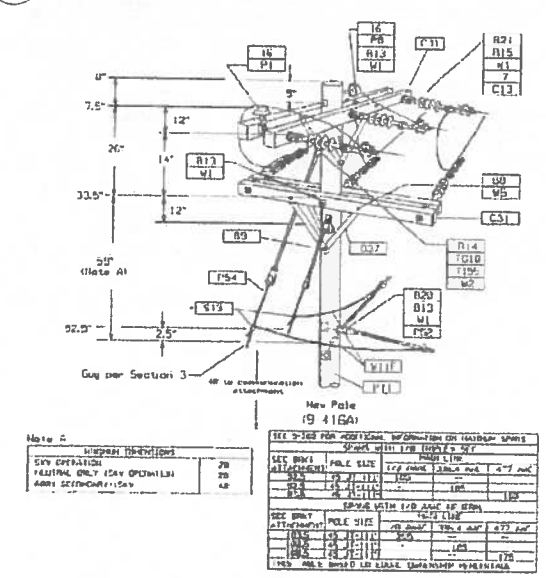

NOTES:
1. FOR SINGLE PHASE (PHASE-PHASE), OMIT CENTER CONDUCTOR AND ATTACHMENTS (9-416B).
2. SEE SECTION INDEX FOR STANDARD POLE TOP CONSTRUCTION SELECTION.
3. USE HD (HEAVY DUTY) CROSSARMS (C310) AND (TB60) BRACES AND GAIN PLATES (C37) FOR 3000" CONSTRUCTION.
4. INSTALL SURGE ARRESTERS PER SECTION 13.
5. OMIT THE BOND FROM DOWN GUY TO SECONDARY ON NONEFFECTIVELY GROUNDED SYSTEMS.

5 JUNCTION POLE DETAIL
NOT TO SCALE

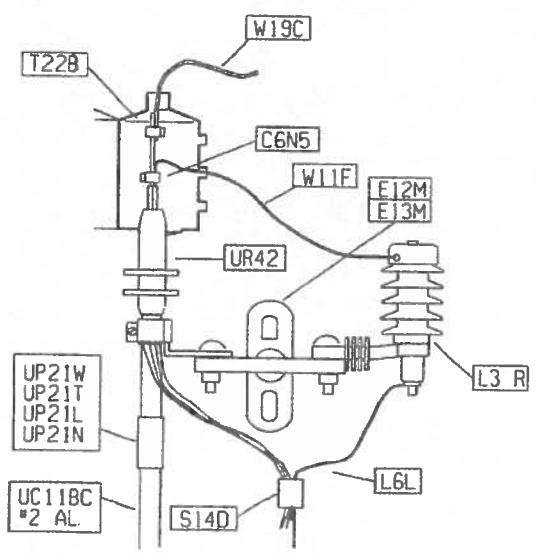

NOTES:
1. FOR #2 UG CABLE CONNECTIONS ONLY. LARGER UG CABLES SHALL UTILIZE NEMA PAD STYLE COMPRESSION CONNECTORS AS OUTLINED IN SECTION 18.1/48.1 TERMINATIONS (REFER TO PAGE 18-107 FOR DETAIL).

6 UNDERGROUND CABLE TERMINATOR
NOT TO SCALE

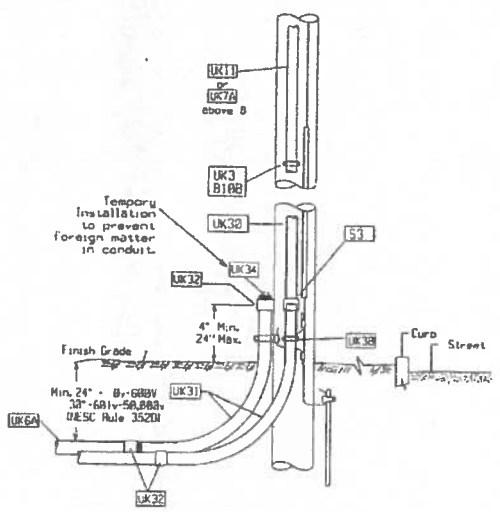

7 RISER DETAIL
NOT TO SCALE

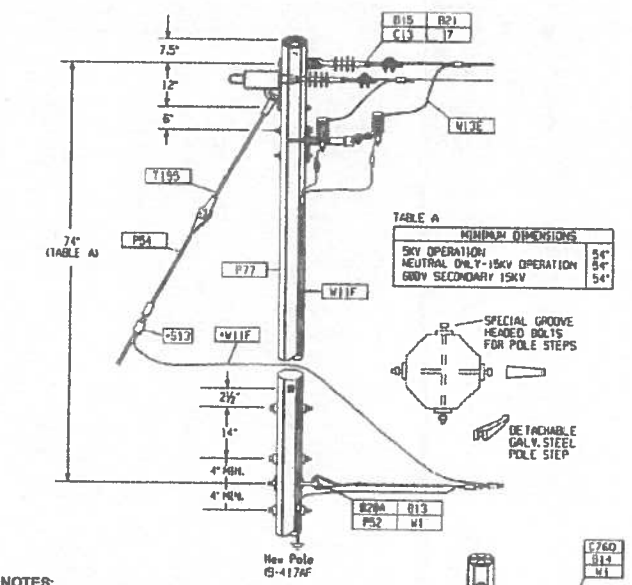

NOTES:
1. DETACHABLE STEEL POLE STEPS MAY BE LEFT INSTALLED, WHILE MAINTAINING 8 FOOT MINIMUM ABOVE GROUND LEVEL.
2. INSTALL DOWN GROUND & MOLDING WITH APPROPRIATE GROUNDING KIT (S34) WHICH INCLUDES NYLON CLIPS WITH #10 SHEET METAL SCREWS SPACED APPROXIMATELY 12" TO 18".
3. INSTALL 12.5M MAXIMUM GUY WIRE SIZE
4. INSTALL SURGE ARRESTERS PER SECTION 13.
5. FOR FRAMING ARMLESS CONSTRUCTION, SEE SECTION 9 AND/OR SECTION 20. OMIT BOND FROM DOWN GUY TO SECONDARY ON NON-EFFECTIVELY GROUNDED SYSTEMS.

9 3-PHASE DEAD END POLE DETAIL
NOT TO SCALE

STANDARD SCREW ANCHOR	APPROXIMATE EXPECTED SOIL HOLDING CAPACITY – IN LBS X 90% FOR STANDARD SCREW ANCHORS INSTALLED IN THESE SOIL CLASS TYPES						
	DENSE/ROCKY SOILS.....LOOSE/SOFT SOILS						
	CLASS 1	CLASS 2	CLASS 3	CLASS 4	CLASS 5	CLASS 6	CLASS 7
Twin 4" HELIX (for Hard Soils) (A16C)	32,000	27,000	16,000				
Single 10" HELIX (all Normal Soils) (A16A)	32,000	25,200	21,600	18,000	14,000	10,000	8,000
Single 14" HELIX (for Soft Soils) (A16B)				28,000	22,000	19,000	15,000

NOTES:
1. SOIL HOLDING STRENGTH IS AN IMPORTANT COMPONENT OF THE GUY-ANCHOR SYSTEM. THESE HOLDING CAPACITY VALUES WERE DERIVED FROM FIELD TESTING RESULTS OBTAINED BY THE MANUFACTURERS. THE INSTALLING TORQUE REQUIRED DURING INSTALLATION IS PROPORTIONAL TO THE RESULTING HOLDING STRENGTH OF THE SYSTEM. THE SKILL AND EXPERIENCE OF THE OPERATOR IS GENERALLY THE BEST OR ONLY INDICATOR OF A SOUND ANCHOR INSTALLATION

8 GUY ANCHOR DETAILS
NOT TO SCALE

ALL NATIONAL GRID STANDARDS SHOWN ON THIS SHEET ARE PER DOCUMENT TITLED "CONSTRUCTION GUIDELINES FOR COMPLIANCE WITH DISTRIBUTION STANDARDS" DATED JULY 2007.
REFER TO THIS STANDARDS GUIDE DOCUMENT FOR ALL SPECIFICATIONS DEPICTED HERE.

solar design associates inc
HARVARD, MA 01451-0242 tel: 978-456-8305
www.solardesign.com fax: 978-772-8713

BLUEWAVE
BOSTON, MA 02116 tel: 617.303.9820
www.bluewave-capital.com fax: 617.350.3443

THIS DRAWING IS FOR INFORMATION PURPOSES ONLY. CERTIFICATION OR VALIDATION IS TO BE DONE BY A PROFESSIONAL WITH EXPERTISE IN THE REQUIRED FIELD AND A LICENSE IN THE STATE THAT THE INSTALLATION WILL RESIDE. CERTIFICATION OR VALIDATION TO BE INCLUDED AS PART OF THE SUBMITTALS FOR PERMITTING OF THE OVERALL PROJECT

BLUEWAVE CAPITAL LLC

SUBMISSION: PERMITTING
Friday, May 13, 2013

PROFESSIONAL STAMP

REVISION NOTES

MARK	DATE	DESCRIPTION
	5.06.13	NO REVISIONS TO THIS SHEET

CONTRACTOR: NAME / STREET / CITY/ST/ZIP / NOTES

BUILDING: NAME / STREET / CITY/ST/ZIP / NOTES

DRAWING

FILE NAME	BlueWave Permitting Details.pln
SCALE	AS SHOWN
DRAWN BY	TP DATE DRAFTED: 4/25/2013
CHECKED BY	PR, CPO, RE SHEET SIZE: ARCH D
DRAWING NO.	PV302
DRAWING TITLE	OVERHEAD DETAILS

SHEET 10 OF 10