PROPOSED SITE DEVELOPMENT PLAN

FOR

NEW BUILDING ADDITION

AT

88 WESTBOROUGH ROAD

IN

NORTH GRAFTON, MASSACHUSETTS

FEBRUARY 2016

OWNER / APPLICANT
EQUIPMENT CARE CENTER OF GRAFTON
88 WESTBOROUGH ROAD
NORTH GRAFTON, MA 01536
TEL. (508) 839-5000
FAX. (508) 839-7000

GENERAL CONTRACTOR
R.P. MASIELLO, INC.
38 MAIN STREET
P.O. BOX 742
BOYLSTON, MA 01505
TEL. (508) 869-6501

ENGINEER & SURVEYOR
WHITMAN & BINGHAM ASSOCIATES, LLC
510 MECHANIC STREET
LEOMINSTER, MA 01453
TEL. (978) 537-5296
FAX (978) 537-1423

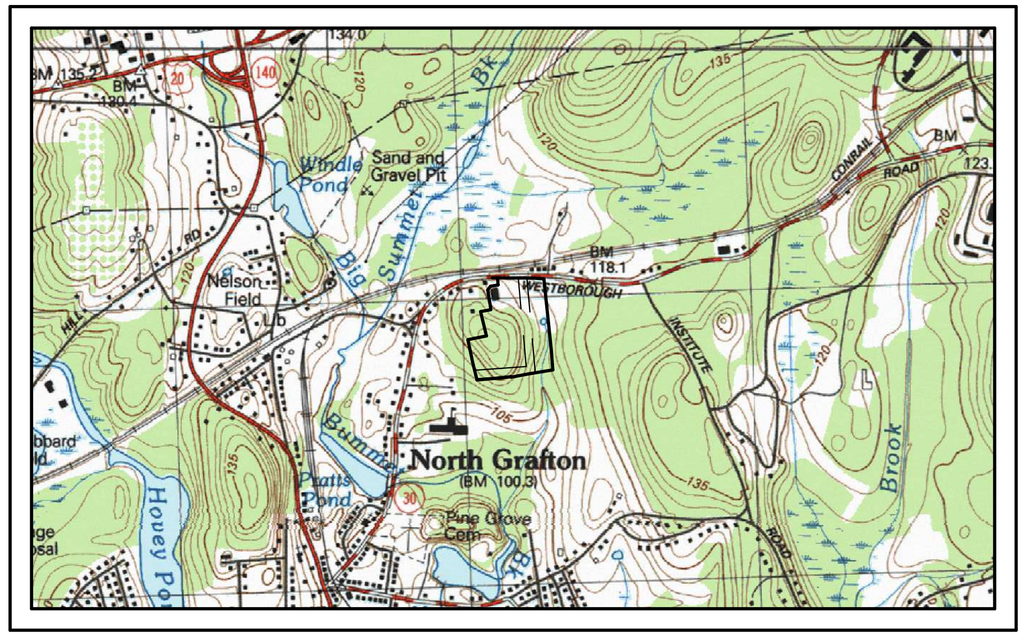

LOCUS PLAN

SCALE: 1"=800' ±

APPROVED AS SUBMITTED _____
APPROVED WITH CONDITIONS _____
APPROVED WITH REVISIONS _____

GRAFTON PLANNING BOARD

DATE: _____

NO.	DATE	DESCRIPTION

WHITMAN & BINGHAM ASSOCIATES
REGISTERED ENGINEERS & LAND SURVEYORS

PLAN INDEX

CONSTRUCTION NOTES	1
EXISTING CONDITIONS	2
SITE & GRADING PLAN	3
UTILITY PLAN	4
EROSION CONTROL PLAN	5
CONSTRUCTION DETAILS	6

4-L-952

CONSTRUCTION NOTES

GENERAL

1.) PROPERTY LINES SHOWN HEREON ARE COMPILED FROM PLANS OF RECORD.

2.) TOPOGRAPHY SHOWN ON THESE PLANS IS THE RESULT OF AN ON-THE-GROUND TOPOGRAPHIC SURVEY PERFORMED BY WHITMAN & BINGHAM ASSOCIATES, LLC. DURING OCTOBER/NOVEMBER 2015. ANY ALTERATIONS TO THE TOPOGRAPHY AFTER THIS DATE MAY NOT BE REFLECTED ON THIS PLAN. ALL ELEVATIONS REFER TO AN ASSUMED DATUM.

3.) UNLESS SPECIFIED OTHERWISE, ALL MATERIALS AND WORKMANSHIP SHALL BE IN ACCORDANCE WITH THE MASSACHUSETTS D.P.W. SPECIFICATIONS OF HIGHWAYS AND BRIDGES AS LAST REVISED, THE TOWN OF GRAFTON PUBLIC WORKS DEPT. AND/OR THE APPROPRIATE LOCAL AUTHORITIES.

4.) * * * D I G S A F E N O T E * * * IN ACCORDANCE WITH MGL.CH 82, SEC. 40 INCLUDING AMENDMENTS, ALL CONTRACTORS SHALL NOTIFY UTILITY COMPANIES AND GOVERNMENT AGENCIES IN WRITING, OF THE INTENT TO EXCAVATE NO LESS THAN 72 HOURS PRIOR TO SUCH EXCAVATION (EXCLUSIVE OF SATURDAYS, SUNDAYS, AND HOLIDAYS.) OR CALL "DIG SAFE" AT 811.

5.) EXISTING UTILITY ELEVATIONS AND LOCATIONS SHOWN SHALL BE CONSIDERED APPROXIMATE ONLY. ALL UTILITY ELEVATIONS AND LOCATIONS MUST BE VERIFIED BY THE CONTRACTOR PRIOR TO THE COMMENCEMENT OF CONSTRUCTION. ANY UTILITIES WHETHER SHOWN ON THESE PLANS OR NOT, SHALL BE REPAIRED/REPLACED AS NECESSARY IF DAMAGED BY THE CONTRACTOR DURING CONSTRUCTION. ANY DISCREPANCIES SHALL BE REPORTED TO THE DESIGN ENGINEER AS SOON AS POSSIBLE.

6.) RELOCATION OF ANY UTILITIES SHALL BE PERFORMED IN ACCORDANCE WITH THE PROVISIONS OF THE APPROPRIATE UTILITY COMPANY AND/OR REGULATORY AGENCY, AT NO ADDITIONAL COST TO THE OWNER.

7.) ALL SLOPES UNLESS OTHERWISE SPECIFIED, SHALL BE LOAMED AND SEEDED AS SOON AS POSSIBLE FOR STABILIZATION AND TO PREVENT EROSION. SLOPES OF 2.5:1 AND STEEPER SHALL BE STABILIZED WITH AN EROSION CONTROL BLANKET.

8.) TEST PITS SHALL BE PERFORMED IN THE AREAS WHERE CROSSING EXISTING UTILITIES IS TO BE PERFORMED PRIOR TO CONSTRUCTION TO VERIFY UTILITY DEPTHS. ADDITIONAL TEST PITS IN OTHER AREAS MAY BE REQUIRED AS DIRECTED BY ENGINEER OR LOCAL APPROVING AUTHORITY. CONTRACTOR SHALL NOTIFY DESIGN ENGINEER AT TIME OF TEST PITS.

9.) ADDITIONAL BENCHMARKS TO BE SET BY CONTRACTOR PRIOR TO CONSTRUCTION TO ENSURE QUALITY WORKMANSHIP.

10.) ANY DEVIATIONS i.e. "FIELD CHANGES" FROM THE DESIGN PLANS MUST BE APPROVED BY THE DESIGN ENGINEER IN WRITING. CONTRACTOR SHOULD BE AWARE THAT LOCAL AND STATE AUTHORITIES HAVE JURISDICTION AND APPROVALS MUST BE OBTAINED THROUGH THEIR RESPECTIVE OFFICE(S) PRIOR TO CONSTRUCTION. WHITMAN & BINGHAM ASSOCIATES, LLC ASSUMES NO LIABILITY OR RESPONSIBILITY WHATSOEVER FOR WORK COMPLETED WITHOUT REGARD TO THE ABOVE REQUIRED "FIELD CHANGE" PROCEDURE.

11.) THE CONTRACTOR IS RESPONSIBLE FOR OBTAINING ALL PERMITS AND INSURANCES THAT MAY BE REQUIRED ON THIS PROJECT. ALL ORDERS OF CONDITIONS, STREET OPENING REQUIREMENTS, AND OTHER REQUIREMENTS UNDER PERMITTING IS THE SOLE RESPONSIBILITY OF THE CONTRACTOR.

12.) DAILY AND PROPER MAINTENANCE OF ALL DITCHES AND EXCAVATIONS ARE REQUIRED. TEMPORARY AND PERMANENT PATCH PER SPECIFICATIONS AND THESE PLANS IS THE SOLE RESPONSIBILITY OF THE CONTRACTOR. UNDER NO CIRCUMSTANCES, ANY EXCAVATION OR DITCH SHALL BE LEFT UNCOVERED, NOT PROPERLY PATCHED, LEFT NOT MAINTAINED OR IN IMPROPER SURFACE CONDITION.

13.) ANY SEDIMENT BASINS SHOULD RECEIVE PERIODIC MAINTENANCE TO REMOVE DEPOSITED SILTS AND DEBRIS TO INSURE PROPER DRAINAGE AND SETTLING OF PARTICULATE MATTER.

14.) ALL EXCESS MATERIALS I.E., SOIL, LEDGE, WATER, AND GENERAL DEBRIS, WILL BE REMOVED AND DISPOSED BY THE CONTRACTOR OFF SITE AT THE CONTRACTOR'S EXPENSE AND AT NO ADDITIONAL COST TO THE OWNER.

LEGEND

EXISTING CONTOURS (540, 542)
PROPOSED CONTOURS (560)
PROPERTY LINES
EDGE OF WETLANDS
100' BUFFER ZONE
EXISTING SEWER (S)
EXISTING DRAIN (D)
EXISTING WATER (W)
GAS LINE (G)
UNDERGROUND UTILITIES (E/C/T)
UNDERGROUND ELECTRIC (E)
FORCE MAIN (FM)
UNDERGROUND TELEPHONE (T)
EDGE OF PAVEMENT
EXISTING BERM
PROPOSED WATER (W)
PROPOSED SEWER
PROPOSED DRAIN
GUARDRAIL
SILTATION BARRIER
EDGE OF WOODS
EXISTING FENCE
STONE WALL

SEWER MANHOLE
DRAIN MANHOLE
ELECTRIC MANHOLE
WATER MANHOLE
TELEPHONE MANHOLE
CATCH BASIN
UTILITY POLE
FIRE HYDRANT
WATER VALVE
WATER SHUT OFF
GAS VALVE
SUBSURFACE TEST PIT

ABBREVIATIONS

RCP – REINFORCED CONCRETE PIPE
PVC – POLYVINYL CHLORIDE
CMP – CORRUGATED METAL PIPE
CONC. – CONCRETE
AC – ASBESTOS CEMENT
CI – CAST IRON
DI – DUCTILE IRON
CLDI – CEMENT LINED DUCTILE IRON
VC – VITRIFIED CLAY
WI – WROUGHT IRON
BSW – BITUMINOUS CONCRETE SIDEWALK
CSW – CONCRETE CEMENT SIDEWALK
BCC – BITUMINOUS CONCRETE CURB
SGC – SLOPED GRANITE CURB
VGC – VERTICAL FACE GRANITE CURB

SITE WORK

1.) CONSTRUCTION ACTIVITY MAY TAKE PLACE ONLY DURING HOURS AS SPECIFIED BY THE APPROPRIATE OFFICIAL OF THE TOWN OF GRAFTON.

2.) CAUTION – NOTICE TO CONTRACTOR THE CONTRACTOR IS SPECIFICALLY CAUTIONED THAT THE LOCATION AND/OR ELEVATION OF EXISTING UTILITIES AS SHOWN ON THESE PLANS IS BASED ON RECORDS OF THE VARIOUS UTILITY COMPANIES AND, WHERE POSSIBLE/MEASUREMENTS TAKEN IN THE FIELD. THE INFORMATION IS NOT TO BE RELIED ON AS BEING EXACT OR COMPLETE. THE CONTRACTOR MUST CALL THE APPROPRIATE UTILITY COMPANY AT LEAST 48 HOURS BEFORE ANY EXCAVATION TO REQUEST EXACT FIELD LOCATIONS OF UTILITIES. IT SHALL BE THE RESPONSIBILITY OF THE CONTRACTOR TO RELOCATE ALL EXISTING UTILITIES WHICH CONFLICT WITH THE PROPOSED IMPROVEMENTS SHOWN ON THE PLANS OR NOT AT NO ADDITIONAL EXPENSE TO OWNER.

3.) FILL MATERIAL

A.) ENSURE THAT AREAS TO BE FILLED ARE FREE OF STANDING WATER, FROST, FROZEN MATERIAL, TRASH, AND DEBRIS PRIOR TO FILL PLACEMENT.
B.) PLACE FILL MATERIAL IN HORIZONTAL LAYERS NOT EXCEEDING EIGHT INCHES (8") IN LOOSE DEPTH AND COMPACT EACH LAYER AT OPTIMUM MOISTURE CONTENT OF FILL MATERIAL TO DENSITY EQUAL TO ORIGINAL ADJACENT GROUND, UNLESS SUBSEQUENT EXCAVATION FOR NEW WORK IS REQUIRED.
C.) GRADE SURFACE TO MATCH ADJACENT GRADES AND TO PROVIDE FLOW TO SURFACE DRAINAGE STRUCTURES AFTER FILL PLACEMENT AND COMPACTION.
D.) ROADWAY FILL SHALL BE COMPACTED IN HORIZONTAL LAYERS NOT EXCEEDING 6" IN LOOSE DEPTH AND COMPACTED TO 98% OF THE MAXIMUM DRY DENSITY (STANDARD PROCTOR).

4.) FINISH GRADING: GRADE ALL AREAS WHERE FINISH GRADE ELEVATIONS ARE INDICATED ON DRAWINGS, OTHER THAN PAVED AREAS AND BUILDINGS, INCLUDING EXCAVATED AREAS, FILLED AND TRANSITION AREAS, AND LANDSCAPED AREAS. GRADED AREAS SHALL BE UNIFORM AND SMOOTH, FREE OF DEBRIS, OR IRREGULAR SURFACE CHANGES. FINISHED SUB GRADE SURFACE SHALL NOT BE MORE THAN 0.10 FEET ABOVE OR BELOW ESTABLISHED FINISHED SUB GRADE ELEVATIONS, AND ALL GROUND SURFACES SHALL VARY UNIFORMLY BETWEEN INDICATED ELEVATIONS. FINISH DITCHES SHALL BE GRADED TO ALLOW FOR PROPER DRAINAGE WITHOUT PONDING AND IN A MANNER THAT WILL MINIMIZE EROSION POTENTIAL.

5.) THE CONTRACTOR IS RESPONSIBLE FOR GENERAL CLEANUP OF THE PROJECT ON A DAILY BASIS AND AT THE COMPLETION OF THE PROJECT. OPEN TRENCHES, DITCHES, EXCAVATIONS, ETC. SHALL NOT BE PERMITTED TO BE LEFT OPEN OVERNIGHT. CONTRACTOR WILL BACK FILL OR UTILIZED SUITABLE STEEL PLATES FOR THE SECURING OF THE PROJECT SITE PRIOR TO CEASING WORK IN THAT PARTICULAR SECTION OF THE PROJECT.

6.) APPROPRIATE TRAFFIC CONTROL i.e. SIGNAGE, BARRICADES, AND OTHER MEANS WILL BE SUPPLIED BY THE CONTRACTOR AND ACCORDING TO ALL FEDERAL, STATE AND LOCAL AGENCIES AT NO ADDITIONAL COST TO OWNER.

7.) UNDER NO CIRCUMSTANCES WILL ANY UTILITY, STRUCTURE, OR REPAIR BE BACK FILLED UNLESS INSPECTED AND APPROVED BY THE CITY OF WORCESTER OR ITS DESIGNATE. THIS WILL NOT RELEASE THE CONTRACTOR FROM ANY RESPONSIBILITY OR LIABILITY AS A RESULT OF PERFORMANCE TESTS THAT ARE REQUIRED AS PART OF THIS PROJECT.

8.) DUE TO THE POSSIBILITY OF DEEP TRENCHES, PROPER SHORING AND/OR THE USE OF TRENCH BOXES SHALL BE UTILIZED AS DIRECTED BY LOCAL, STATE, AND/OR FEDERAL REGULATORY AGENCIES TO PROVIDE FOR A SAFE WORKING ENVIRONMENT. TRENCH PERMITS ARE REQUIRED IN ACCORDANCE WITH 520 CMR 14.00 EXCAVATION AND TRENCH SAFETY.

9.) ALL UTILITIES SHOWN OR NOT SHOWN ON THE PLAN(S) WHICH ARE DISTURBED DURING CONSTRUCTION SHALL BE REPAIRED/REPLACED OR MOVED AS REQUIRED BY THE THE CONTRACTOR (SEE SITE WORK NOTE #2 AND GENERAL NOTE #5), AT NO ADDITIONAL COST TO THE OWNER.

10.) ALL DRAINAGE PIPE SHALL BE HDPE. UNLESS OTHERWISE SPECIFIED

11.) USE OF EXPLOSIVES
A.) COMPLY WITH ALL LAWS, RULES, AND REGULATIONS OF FEDERAL, STATE, AND LOCAL AUTHORITIES AND INSURER WHICH GOVERN STORAGE, USE, MANUFACTURE, SALE, HANDLING, TRANSPORTATION, LICENSING, OR OTHER DISPOSITION OF EXPLOSIVES. TAKE SPECIAL PRECAUTIONS FOR PROPER USE OF EXPLOSIVES TO PREVENT HARM TO HUMAN LIFE AND DAMAGE TO SURFACE STRUCTURES, ALL UTILITY LINES, OR OTHER SUBSURFACE STRUCTURES. DO NO CONDUCT BLASTING OPERATIONS UNTIL PERSONS IN VICINITY HAVE HAD AMPLE NOTICE AND HAVE REACHED POSITIONS OF SAFETY.
B.) BLASTING OF ANY ROCK SHALL REQUIRE APPROPRIATE APPROVALS FROM THE TOWN OF GRAFTON FIRE DEPARTMENT, PLANNING BOARD, BUILDING INSPECTOR AND/OR OTHER AGENCIES, PRIOR TO COMMENCEMENT OF WORK. FIRE DEPARTMENT MUST BE NOTIFIED AT LEAST 48 HOURS PRIOR TO BLASTING.
AT THE DISCRETION OF THE FIRE DEPARTMENT, BLASTING MAY NEED TO BE MONITORED WITH A INDEPENDENTLY SUPERVISED SEISMOGRAPH.
ALL BLASTED ROCK OR OTHER EXCESS MATERIALS WILL BE REMOVED DISPOSED OF PROPERLY EITHER OFF-SITE OR ON-SITE, AT NO ADDITIONAL COST TO THE OWNER.

12.) PROTECTIONS
A.) PROVIDE PROTECTION NECESSARY TO PREVENT DAMAGE TO EXISTING IMPROVEMENTS, TREES OR VEGETATION.
B.) PROTECT IMPROVEMENTS ON ADJOINING PROPERTIES AND ON OWNER'S PROPERTY.
C.) RESTORE DAMAGED IMPROVEMENTS TO ORIGINAL CONDITION AS ACCEPTABLE TO PARTIES HAVING JURISDICTION.
D.) CONDUCT OPERATIONS TO ENSURE MINIMUM INTERFERENCE WITH ROADS, STREETS, WALKS, AND OTHER ADJACENT OCCUPIED OR USED FACILITIES. DO NOT CLOSE OR OBSTRUCT STREETS, WALKS, OR OTHER OCCUPIED OR USED FACILITIES WITHOUT PERMISSION FROM AUTHORITIES HAVING JURISDICTION. STREETS AND ROADWAYS SHALL BE THOROUGHLY CLEANED AND/OR SWEPT ON A DAILY BASIS OR MORE FREQUENTLY AS REQUIRED BY THE GOVERNING AUTHORITY.

LAND USE & PROJECT DATA

RECORD OWNER:
EQUIPMENT CARE CENTER OF GRAFTON, LLC
88 WESTBOROUGH ROAD
N. GRAFTON, MA 01536

TOWN OF GRAFTON ASSESSORS MAP 12 BLOCK 0 LOT 12

DEED REFERENCES: BK. 37347 PG. 145

LAND AREAS:
LOT AREA: 13.1± ACRES

OVERLAY DISTRICTS:
A PORTION OF THE PROPERTY LIES WITHIN THE WATER SUPPLY PROTECTION OVERLAY DISTRICT

THE PROPERTY DOES NOT LIE WITHIN THE 100 YEAR FLOOD HAZARD ZONE REFERENCE FIRM MAP 25027C0827E DATED JULY 4, 2011.

ZONING REQUIREMENTS:

ITEM	REQUIRED	CONFORMANCE
DISTRICT	OLI	
MIN. AREA	40,000 S.F.	YES
MIN. FRONTAGE	120 FEET	YES
MIN. LOT WIDTH	120 FEET	YES
MIN. FRONT YARD	40 FEET	YES
MIN. SIDE YARD	35 FEET	YES
MIN. REAR YARD	35 FEET	YES
MAX. BUILDING HEIGHT	35 FEET	YES
MAX. BUILDING COVERAGE	40%	YES

BUILDING DATA:
BUILDING USE: TRAILER CLEAN/WASH OPERATION
BUILDING CONSTRUCTION: SEE ARCHITECTURAL DRAWINGS

UTILITIES AVAILABLE TO SITE:
1. SEWER – TOWN OF GRAFTON
2. WATER – TOWN OF GRAFTON
3. ELECTRIC – NATIONAL GRID
4. TELEPHONE – VERIZON
4. GAS – NATIONAL GRID

PARKING DATA:

USE	GROSS	PARKING FACTOR	SPACES REQUIRED
INDUSTRIAL AND WAREHOUSE	24,575± S.F.	1:500 S.F.	50 SPACES

APPROVED AS SUBMITTED _____
APPROVED WITH CONDITIONS _____
APPROVED WITH REVISIONS _____

GRAFTON PLANNING BOARD

DATE: _____

CHECKED BY:	SCALE:	JOB NUMBER:	PLAN NUMBER:	FIELD BOOK REF(S):
JER	NONE	13619	4–L–952	
DRAWN BY:	**DATE:**	**SHEET NUMBER:**	**COMPS:**	**PLAN REF(S):**
BFM	FEBRUARY 15, 2016	1 OF 6	9839	NONE

REVISIONS

NO.	DESCRIPTION	DATE	BY

CONSTRUCTION NOTES
FOR
EQUIPMENT CARE CENTER OF GRAFTON
IN
NORTH GRAFTON, MASSACHUSETTS

PREPARED FOR:
R.P. MASIELLO, INC.
38 MAIN STREET
BOYLSTON, MASSACHUSETTS 01505
(508) 869-6501

COMMONWEALTH OF MASSACHUSETTS
BRIAN F. MILISCI
CIVIL
#38102
REGISTERED PROFESSIONAL ENGINEER

WHITMAN & BINGHAM ASSOCIATES
REGISTERED ENGINEERS & LAND SURVEYORS
510 MECHANIC STREET
LEOMINSTER, MASSACHUSETTS 01453
TEL (978) 537-5256
FAX (978) 537-1433

4–L–952

NOTES:

1. DEED REFERENCE: EQUIPMENT CARE CENTER OF GRAFTON
BK. 37347, P. 145

2. PLAN REFERENCE: P.B. 768, PLAN 79
P.B. 621, PLAN 51

3. THE SUBJECT PREMISES IS GRAPHICALLY SITUATED IN THE OFFICE / LIGHT INDUSTRIAL (OLI) ZONING DISTRICT WITH THE FOLLOWING MINIMUM DIMENSIONAL REQUIREMENTS:

MINIMUM LOT AREA:	40,000 S.F.
MINIMUM LOT FRONTAGE:	120 FT.
MINIMUM FRONT SETBACK:	40 FT.
MINIMUM SIDE SETBACK:	15 FT.
MINIMUM REAR SETBACK:	15 FT.

4. THE SUBJECT PREMISES IS NOT GRAPHICALLY SITUATED IN THE 100-YEAR FLOOD HAZARD ZONE PER FLOOD INSURANCE RATE MAP 25027C0827E DATED JULY 4, 2011.

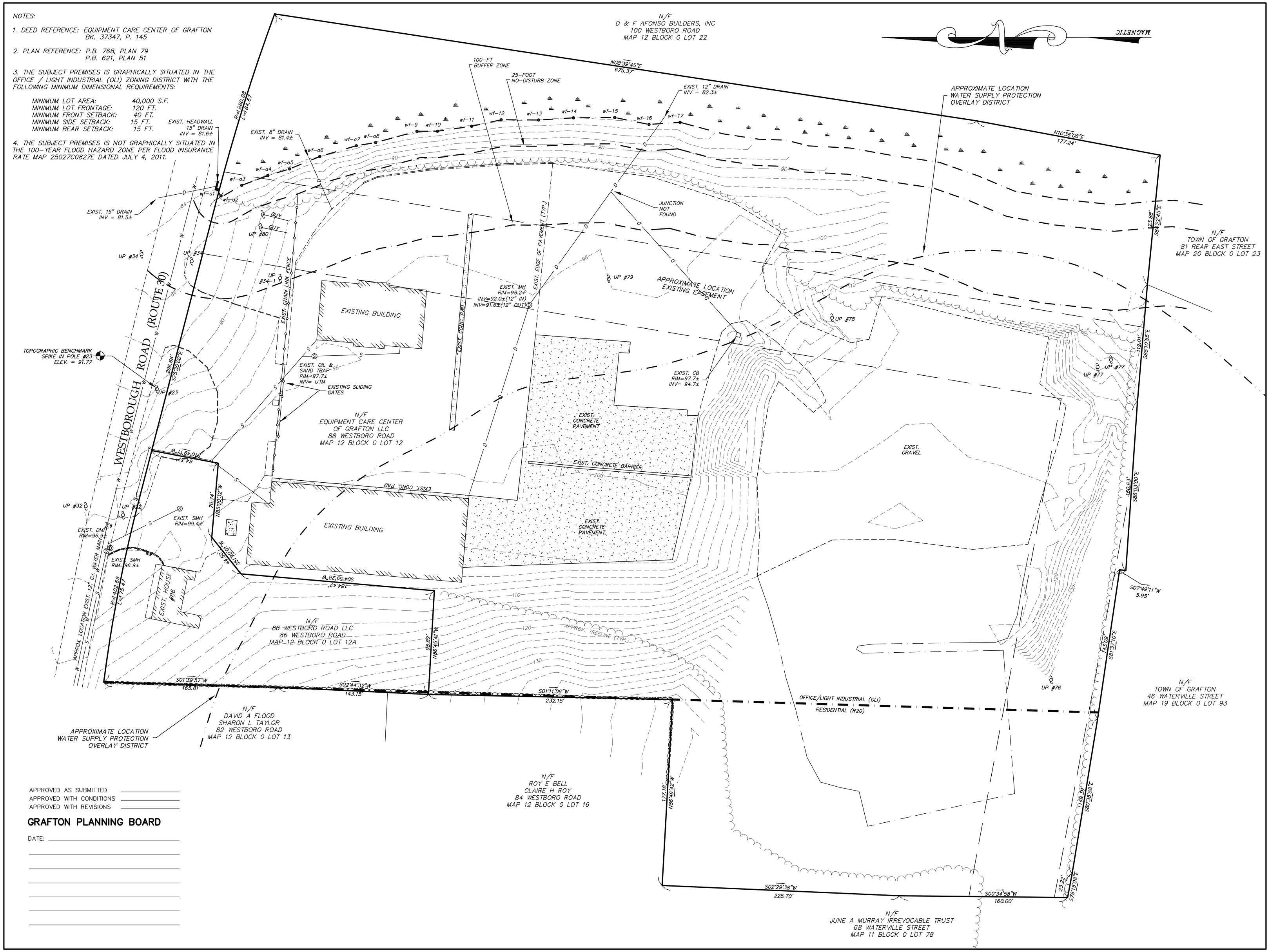

APPROVED AS SUBMITTED _____
APPROVED WITH CONDITIONS _____
APPROVED WITH REVISIONS _____

GRAFTON PLANNING BOARD

DATE: _____

CHECKED BY: JER	SCALE: 1" = 40'
DRAWN BY: BFM	DATE: FEBRUARY 15, 2016
SHEET NUMBER: 2 OF 6	JOB NUMBER: 13619
COMPS: 9839	PLAN NUMBER: 4-L-952
PLAN REF(S): NONE	FIELD BOOK REF(S):

REVISIONS

NO.	DESCRIPTION	DATE	BY

EXISTING CONDITIONS PLAN
FOR
EQUIPMENT CARE CENTER OF GRAFTON
IN
NORTH GRAFTON, MASSACHUSETTS

PREPARED FOR:
R.P. MASIELLO, INC.
38 MAIN STREET
BOYLSTON, MASSACHUSETTS 01505
(508) 869-6501

COMMONWEALTH OF MASSACHUSETTS
BRIAN F. MILUSCI
CIVIL
#49102
REGISTERED PROFESSIONAL ENGINEER

WHITMAN & BINGHAM ASSOCIATES
REGISTERED ENGINEERS & LAND SURVEYORS
540 MECHANIC STREET
LEOMINSTER, MASSACHUSETTS 01453
TEL (978) 537-5256
FAX (978) 537-3435

4-L-952

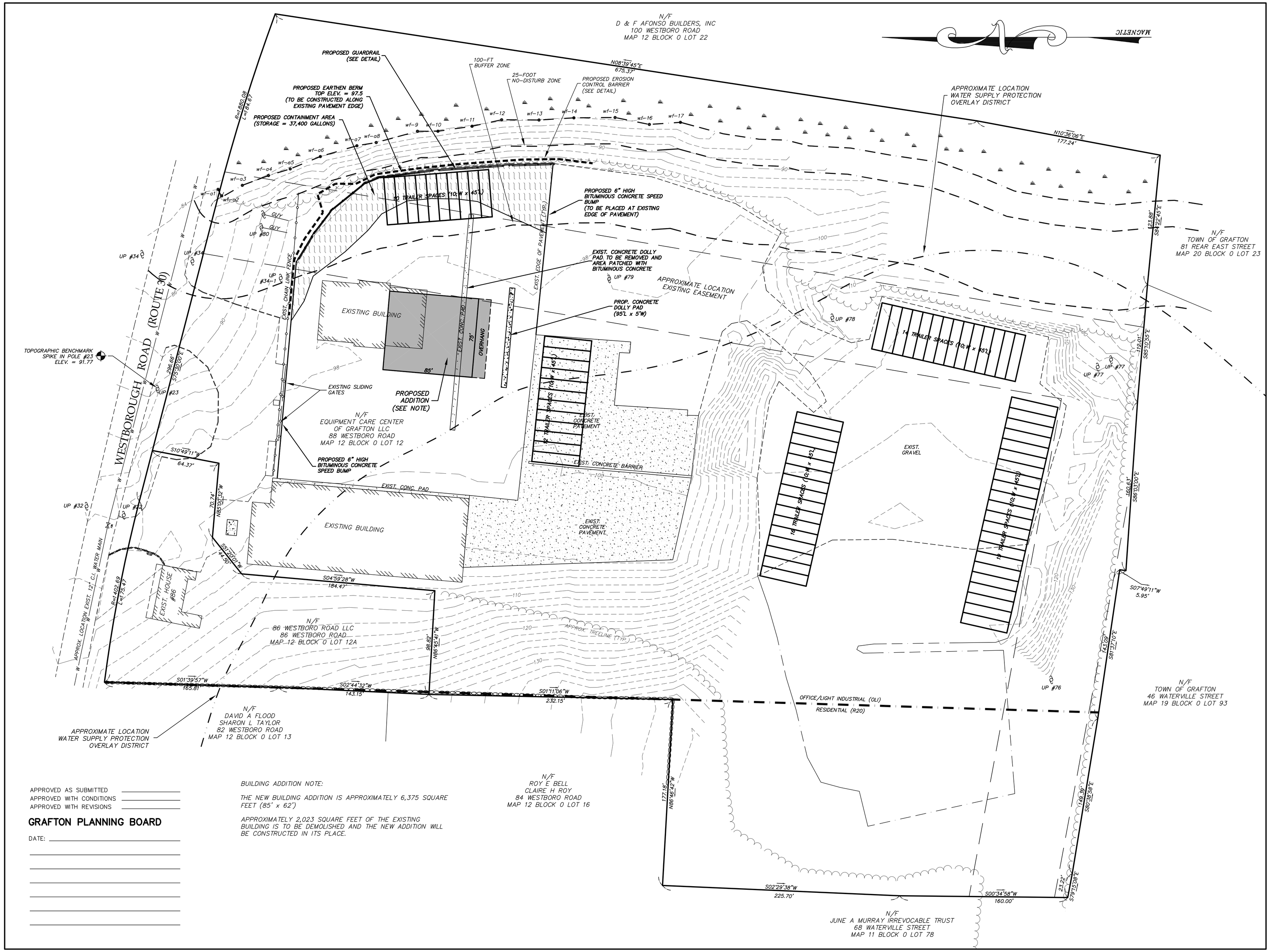

APPROVED AS SUBMITTED _____
APPROVED WITH CONDITIONS _____
APPROVED WITH REVISIONS _____

GRAFTON PLANNING BOARD

DATE: _____

BUILDING ADDITION NOTE:

THE NEW BUILDING ADDITION IS APPROXIMATELY 6,375 SQUARE FEET (85' x 62')

APPROXIMATELY 2,023 SQUARE FEET OF THE EXISTING BUILDING IS TO BE DEMOLISHED AND THE NEW ADDITION WILL BE CONSTRUCTED IN ITS PLACE.

CHECKED BY:	SCALE:	JOB NUMBER:	PLAN NUMBER:	FIELD BOOK REF(S):
JER	1" = 40'	13619	4-L-952	

DRAWN BY:	DATE:	SHEET NUMBER:	COMPS:	PLAN REF(S):
BFM	FEBRUARY 15, 2016	3 OF 6	9839	NONE

REVISIONS

NO.	DESCRIPTION	DATE	BY

PROPOSED SITE PLAN
FOR
EQUIPMENT CARE CENTER OF GRAFTON
IN
NORTH GRAFTON, MASSACHUSETTS

PREPARED FOR:
R.P. MASIELLO, INC.
38 MAIN STREET
BOYLSTON, MASSACHUSETTS 01505
(508) 869-6501

COMMONWEALTH OF MASSACHUSETTS
BRIAN F. MILISCI
CIVIL
#38112
REGISTERED PROFESSIONAL ENGINEER

WHITMAN & BINGHAM ASSOCIATES
REGISTERED ENGINEERS & LAND SURVEYORS
510 MECHANIC STREET
LEOMINSTER, MASSACHUSETTS 01453
TEL. (978) 537-5556
FAX. (978) 537-1433

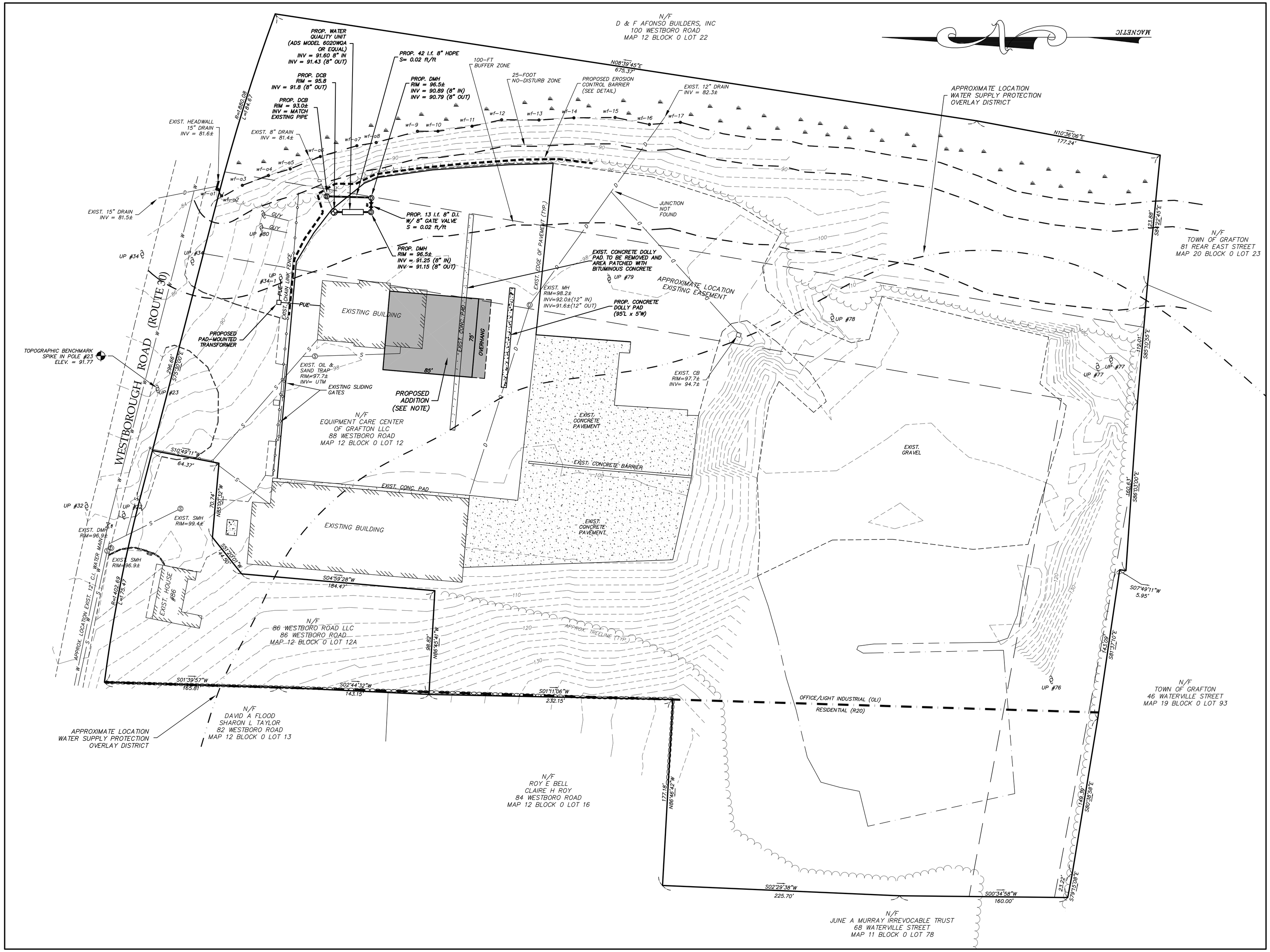

CHECKED BY: JER	SCALE: 1" = 40'
DRAWN BY: BFM	DATE: FEBRUARY 15, 2016
SHEET NUMBER: 4 OF 6	JOB NUMBER: 13619
COMPS: 9839	PLAN NUMBER: 4-L-952
PLAN REF(S): NONE	FIELD BOOK REF(S):

REVISIONS

NO.	DESCRIPTION	DATE	BY

PROPOSED UTILITY PLAN
FOR
EQUIPMENT CARE CENTER OF GRAFTON
IN
NORTH GRAFTON, MASSACHUSETTS

PREPARED FOR:
R.P. MASIELLO, INC.
38 MAIN STREET
BOYLSTON, MASSACHUSETTS 01505
(508) 869-6501

COMMONWEALTH OF MASSACHUSETTS
BRIAN F. MILUSCI
CIVIL
#38102
REGISTERED PROFESSIONAL ENGINEER

WHITMAN & BINGHAM ASSOCIATES
REGISTERED ENGINEERS & LAND SURVEYORS
540 MECHANIC STREET
LEOMINSTER, MASSACHUSETTS 01453
TEL (978) 537-5256
FAX (978) 537-3435

GENERAL EROSION CONTROL NOTES:

1. THE SITE PLAN DEPICTS THE REQUIRED SOIL EROSION CONTROL MEASURES. THE SITE SUBCONTRACTOR IS RESPONSIBLE FOR MAINTAINING THE CONSTRUCTION SITE IN SUCH A MANNER THAT:

A. SOIL EROSION IS KEPT TO A MINIMUM.
B. NO SEDIMENT LEAVES THE CONSTRUCTION SITE PROPERTY.
C. ALL POSSIBLE MEASURES ARE EMPLOYED TO PREVENT SEDIMENT FROM ENTERING DRAINAGE COURSES EVEN BEYOND THE DETAILS SHOWN ON THIS PLAN IF NECESSARY.

2. THE SITE SUBCONTRACTOR IS RESPONSIBLE FOR ALL SILTATION RESULTING FROM EROSION OR SEDIMENTATION FROM THE SITE TO SURROUNDING PROPERTIES OR WATER BODIES DURING CONSTRUCTION AS A RESULT OF THIS PROJECT.

3. LOAM AND SEED ALL DISTURBED AREAS AT THE EARLIEST TIME POSSIBLE. USE WINTER SEED RATES AND SPECIFICATIONS IF APPROPRIATE.

4. INSPECT SOIL EROSION MEASURES WEEKLY AND AFTER SIGNIFICANT STORM EVENTS. MAKE ALL NECESSARY REPAIRS TO FACILITIES AS SOON AS POSSIBLE BUT NO LONGER THAN TWO DAYS. CLEAN AND RESET SILT FENCES WHICH ACCUMULATE SEDIMENT AND OTHER DEBRIS.

5. PROTECT AND STABILIZE ALL AREAS NOT SCHEDULED FOR EROSION, PREVENTION OR STABILIZATION, BUT THAT SHOW SIGNS OF EROSION. NOTIFY ENGINEER OF ANY SIGNIFICANT EROSION PROBLEM.

6. TEMPORARILY SEED, WITHIN 7 DAYS, ANY AREA WHICH WILL BE LEFT UNDISTURBED FOR MORE THAN 14 DAYS WITH TEMPORARY SEED MIX. PERMANENTLY SEED ANY AREA WHICH CAN BE LOAMED AS SOON AS POSSIBLE WITH PERMANENT SEED MIX LISTED BELOW. DO NOT USE PERMANENT SEED MIX AFTER SEPTEMBER 30.

7. FOLLOW SILT FENCE MANUFACTURER'S SPECIFICATIONS AND RECOMMENDATIONS FOR INSTALLATION OF SILT FENCE. SECURE ENTIRE BOTTOM OF FENCE BY BURYING BOTTOM OF FENCE IN A TRENCH, REFER TO SILT FENCE DETAILS.

8. ALL SOIL STOCKPILE AREAS SHALL BE PROTECTED FROM SILTATION MIGRATION BY ENCIRCLING STOCKPILES WITH EROSION CONTROL BARRIER(S). SHOULD IT BE DETERMINED THAT STOCKPILE AREA(S) ARE TO BE LEFT UNUSED FOR MORE THAN 30 DAYS, STOCKPILES SHALL BE TREATED WITH TACIFIER SO THAT EROSION IS KEPT TO A MINIMUM.

9. ANY STOCKPILES THAT ARE 10-FEET IN HEIGHT OR GREATER SHALL HAVE A SAFETY FENCE INSTALLED AROUND THE PERIMETER OF THE STOCKPILE.

CONSTRUCTION SEQUENCE AND EROSION CONTROL:

1. IF APPLICABLE, INSTALL CONSTRUCTION ENTRANCE (SEE DETAIL).

2. CONSTRUCT SILTATION BARRIER(S) AS DEPICTED ON THE SITE PLANS PLANS.

3. INSTALL PROPOSED STORM WATER DEVICES.

4. CONSTRUCT EARTHEN BERM.

5. THE SITE SUBCONTRACTOR SHALL MAINTAIN SEDIMENTATION AND EROSION CONTROL DEVICES THROUGHOUT THE PROJECT SITE FOR THE DURATION OF THE CONSTRUCTION.

6. ALL SLOPES STEEPER THAN 3:1 SHALL BE SEEDED AND MULCHED WITHIN 72 HOURS OF THEIR COMPLETION.

7. ALL SWALES AND DITCHES WITH SLOPES EXCEEDING 5% SHALL BE TREATED WITH JUTE MATTING.

8. INSPECT AND MAINTAIN ALL EROSION AND SEDIMENT CONTROL MEASURES DAILY.

9. COMPLETE PERMANENT SEEDING.

10. REMOVE TEMPORARY CONTROL MEASURES ONCE EXPOSED AREAS ARE STABILIZED AND PERMANENT EROSION AND SEDIMENT FACILITIES ARE INSTALLED AND ACCOMPLISH FINAL CLEAN UP.

AN AREA SHALL BE CONSIDERED STABLE IF ONE OF THE FOLLOWING HAS OCCURRED:
A. BASE COURSE GRAVELS ARE INSTALLED IN AREAS TO BE PAVED.
B. A MINIMUM OF 85% VEGETATED GROWTH HAS BEEN ESTABLISHED.
C. A MINIMUM OF 3" OF NON-EROSIVE MATERIAL SUCH AS STONE OR RIPRAP HAS BEEN ESTABLISHED.
D. EROSION CONTROL BLANKETS HAVE BEEN PROPERLY INSTALLED.

11. ALL DISTURBED AREAS SHALL BE STABILIZED WITH GRASS OR MULCH.

12. THE LENGTH OF TIME AN AREA CAN BE DISTURBED AND UNSTABILIZED IS 45 DAYS.

WINTER CONSTRUCTION NOTES:

1. ALL PROPOSED POST-DEVELOPMENT VEGETATED AREAS WHICH DO NOT EXHIBIT A MINIMUM OF 85% VEGETATIVE GROWTH BY NOVEMBER 15, OR WHICH ARE DISTURBED AFTER NOVEMBER 15, SHALL BE STABILIZED BY SEEDING AND INSTALLING EROSION CONTROL BLANKETS ON SLOPES GREATER THAN 4:1, AND SEEDING AND PLACING 3 TO 4 TONS OF MULCH PER ACRE, SECURED WITH ANCHORED NETTING, ELSEWHERE. THE PLACEMENT OF EROSION CONTROL BLANKETS OR MULCH AND NETTING SHALL NOT OCCUR OVER ACCUMULATED SNOW OR ON FROZEN GROUND AND SHALL BE COMPLETED IN ADVANCE OF THAW OR SPRING MELT EVENTS.

2. ALL DITCHES OR SWALES WHICH DO NOT EXHIBIT A MINIMUM OF 85% VEGETATIVE GROWTH BY NOVEMBER 15, OR WHICH ARE DISTURBED AFTER NOVEMBER 15, SHALL BE STABILIZED WITH STONE OR EROSION CONTROL BLANKETS APPROPRIATE FOR THE DESIGN FLOW CONDITIONS.

GENERAL SEEDING NOTES:

1. USE PERMANENT SEED MIXES AND RATES BETWEEN 5/15 AND 9/30
2. USE TEMPORARY SEED MIXES FOR PERIODS LESS THAN 12 MONTHS. IF USING TEMPORARY SEED MIXES AND RATES BETWEEN 10/01 AND 5/14, RE-SEED WITH PERMANENT SEED MIX AFTER 5/15.
3. SEED BED PREPARATION:
   - SURFACE AND SEEPAGE WATER SHOULD BE DRAINED OR DIVERTED FROM THE SITE TO PREVENT DROWNING OR WINTER KILLING OF THE PLANTS.
   - STONES LARGER THAN 4 INCHES AND TRASH SHOULD BE REMOVED.

PERMANENT SEED

TALL FESCUE	– 20 LBS/ACRE
CREEPING RED FESCUE	– 20 LBS/ACRE
BIRDSFOOT TREFOIL	– 8 LBS/ACRE
TOTAL	– 48 LBS/ACRE

TEMPORARY SEED

OATS	– 80 LBS/ACRE 4/01–5/14
ANNUAL RYE GRASS	– 40 LBS/ACRE
SUDANGRASS	– 40 LBS/ACRE 5/15–8/14
ANNUAL RYEGRASS	– 80 LBS/ACRE 5/15–9/14
WINTER RYE	– 112 LBS/ACRE 9/15–9/30
WINTER RYE	– 112 LBS/ACRE 10/01–3/31

(PROTECT W/MULCH COVER)

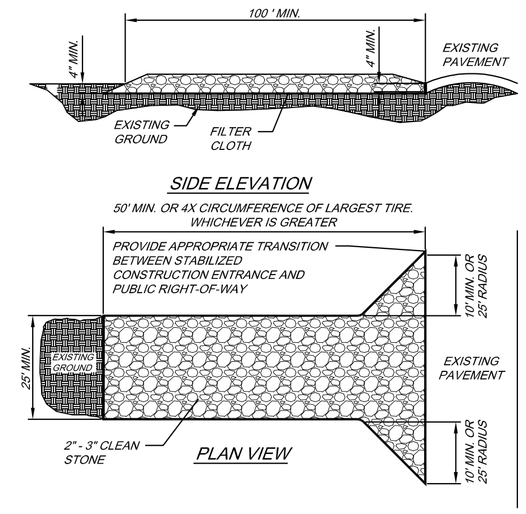

NOTES:

1. STONE – USE COARSE AGGREGATE (2 – 3 INCH STONE)
2. LENGTH – AS EFFECTIVE, BUT NOT LESS THAN 50 FEET.
3. THICKNESS – NOT LESS THAN EIGHT (8) INCHES.
4. WIDTH – NOT LESS THAN FULL WIDTH OF ALL POINTS OF INGRESS OR EGRESS.
5. WASHING – WHEN NECESSARY, WHEELS SHALL BE CLEANED TO REMOVE SEDIMENT PRIOR TO ENTRANCE ONTO PUBLIC RIGHT-OF-WAY. WHEN WASHING IS REQUIRED, IT SHALL BE DONE ON AN AREA STABILIZED WITH CRUSHED STONE WHICH DRAINS INTO AN APPROVED SEDIMENT TRAP OR SEDIMENT BASIN. ALL SEDIMENT SHALL BE PREVENTED FROM ENTERING ANY STORM DRAIN, DITCH, OR WATERCOURSE THROUGH USE OF SAND BAGS, GRAVEL, BOARDS OR OTHER APPROVED METHODS.
6. MAINTENANCE – THE ENTRANCE SHALL BE MAINTAINED IN A CONDITION WHICH WILL PREVENT TRACKING OR FLOWING OF SEDIMENT ONTO PUBLIC RIGHT-OF-WAY. THIS MAY REQUIRE PERIODIC TOP DRESSING WITH ADDITIONAL STONE AS CONDITIONS DEMAND AND REPAIR AND/OR CLEANOUT OF ANY MEASURES USED TO TRAP SEDIMENT. ALL SEDIMENT SPILLED, DROPPED, WASHED OR TRACKED ONTO PUBLIC RIGHTS-OF-WAY MUST BE REMOVED IMMEDIATELY.
7. 12' X 24' METAL GRATE MAY BE USED. GRATE SHALL BE 25' AWAY FROM PAVEMENT AND APPROPRIATE SEDIMENT CONTROL TRAPPING DEVICE SHALL BE USED AT GRATE OUTLET POINT.

STABILIZED CONSTRUCTION ENTRANCE

NOT TO SCALE

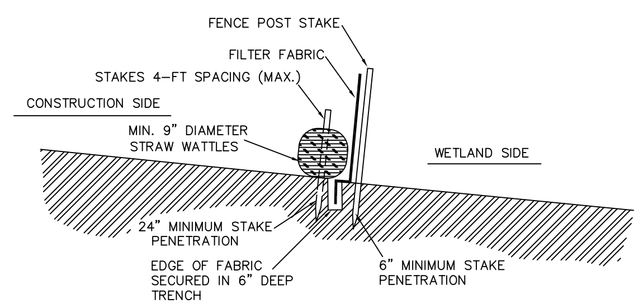

EROSION CONTROL BARRIER DETAIL

NOT TO SCALE

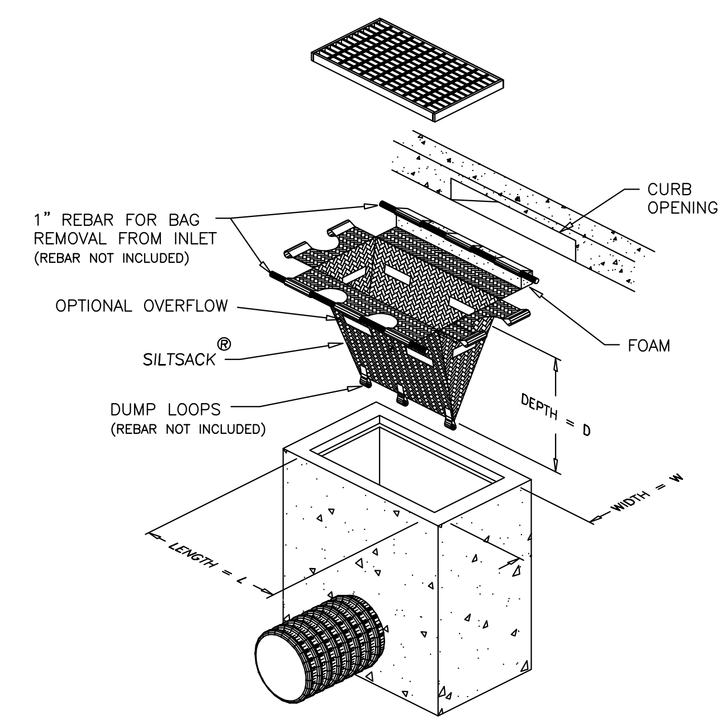

SILT SACK DETAIL

NOT TO SCALE

NOTE: ALL CATCH BASINS WITHIN PROJECT AREA ARE TO RECEIVE SILT SACK PROTECTION DURING CONSTRUCTION PHASE OF THE PROJECT

CHECKED BY:	SCALE:	JOB NUMBER:	PLAN NUMBER:	FIELD BOOK REF(S):
JER	AS SHOWN			

DRAWN BY:	DATE:	SHEET NUMBER:	COMPS:	PLAN REF(S):
BFM	FEBRUARY 15, 2016	5 OF 6	9839	NONE

REVISIONS

NO.	DESCRIPTION	DATE	BY

CONSTRUCTION DETAILS
FOR
EQUIPMENT CARE CENTER OF GRAFTON
IN
NORTH GRAFTON, MASSACHUSETTS

PREPARED FOR:
R.P. MASIELLO, INC.
38 MAIN STREET
BOYLSTON, MASSACHUSETTS 01505
(508) 869-6501

COMMONWEALTH OF MASSACHUSETTS
BRIAN F. MILISCI
CIVIL
#39102
Registered Professional Engineer

WHITMAN & BINGHAM ASSOCIATES
REGISTERED ENGINEERS & LAND SURVEYORS
510 MECHANIC STREET
LEOMINSTER, MASSACHUSETTS 01453
TEL: (978) 537-5266
FAX: (978) 537-1423

PIPE SIZE	LEBARON TRAP
12" PIPE	L219-12
15" PIPE	L215

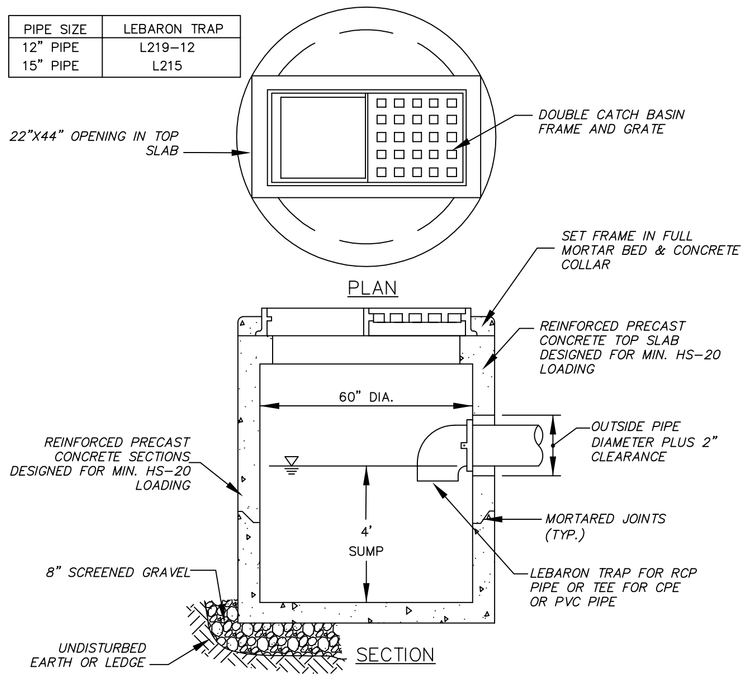

DOUBLE GRATE CATCH BASIN

WITH TRAP
NOT TO SCALE

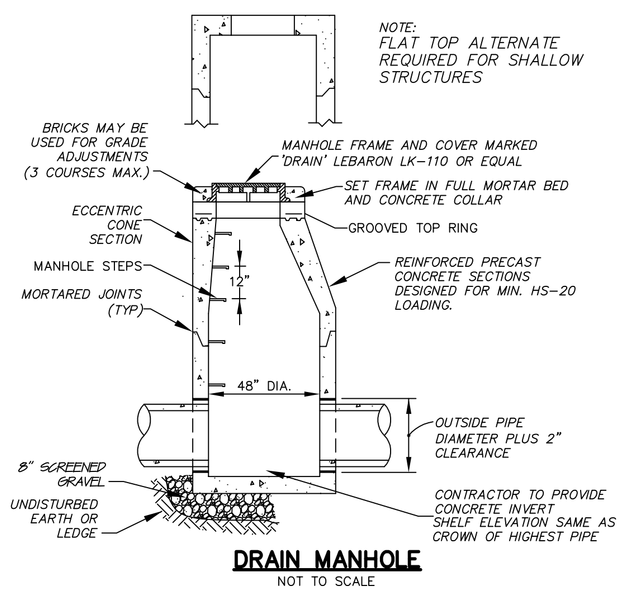

DRAIN MANHOLE

NOT TO SCALE

TRENCH WIDTH (W)		
D DIAMETER OF PIPE	W UNSHEETED	W SHEETED
TO 12"	3'	4'
14" TO 24"	4'	5'
30" TO 36"	5'	6'

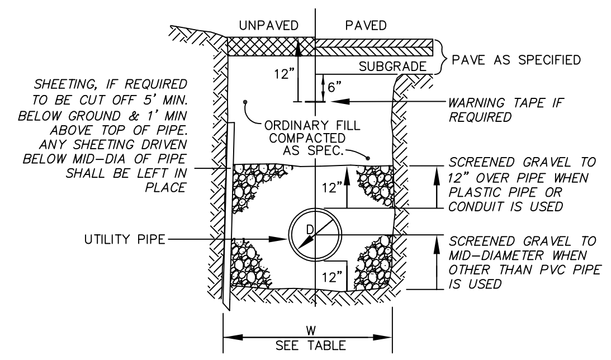

UTILITY TRENCH

NOT TO SCALE

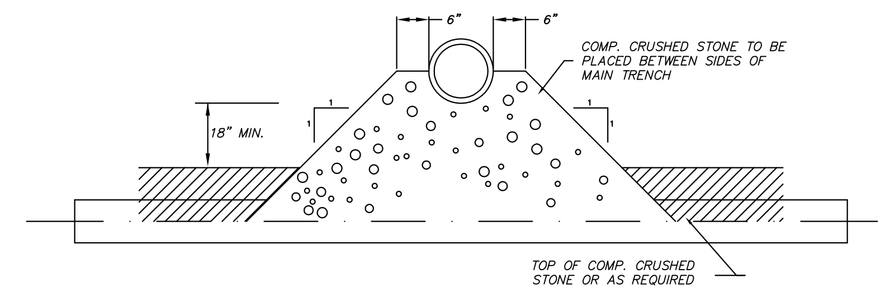

UTILITY CROSSING DETAIL

NOT TO SCALE

A MINIMUM 18-INCH VERTICAL SEPARATION SHOULD BE MAINTAINED BETWEEN THE WATER MAIN AND THE SANITARY SEWER MAIN

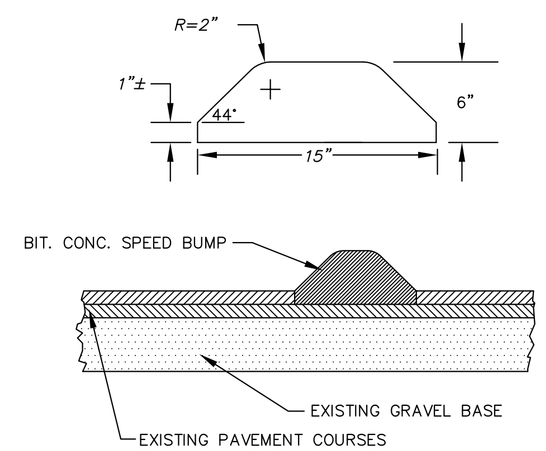

BITUMINOUS CONCRETE SPEED BUMP DETAIL

NOT TO SCALE

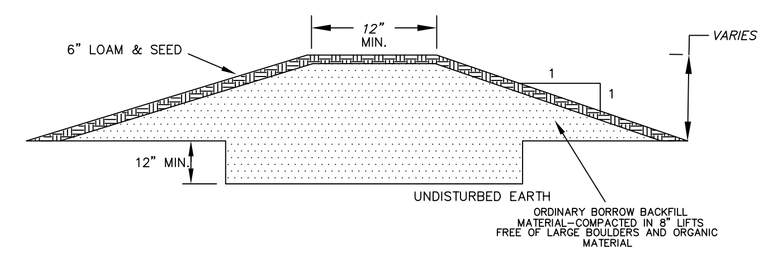

EARTHEN BERM DETAIL

NOT TO SCALE

NOTE: MATERIAL FOR EARTHEN BERM CONSTRUCTION SHALL BE CLEARED OF ALL TOP SOIL, ROCKS, DEBRIS, STUMPS, ETC.

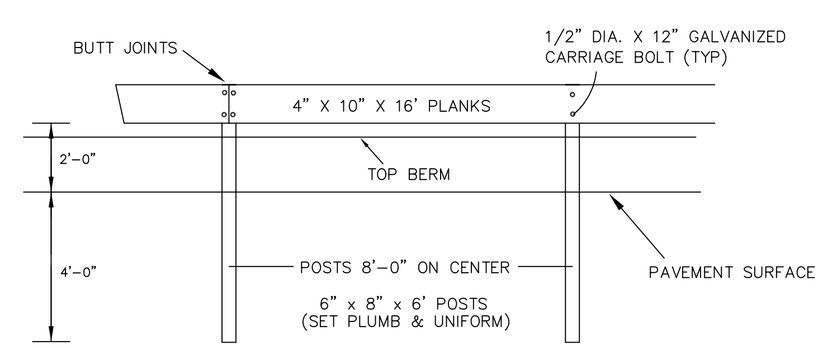

NOTE: ALL WOOD TO BE PRESSURE TREATED OR EQUAL.

WOOD GUARD RAIL DETAIL

NOT TO SCALE

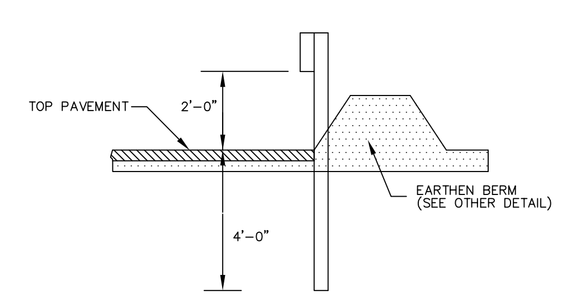

GUARD RAIL LOCATION DETAIL

NOT TO SCALE

NOTE: POSTS AND RAILS ARE TIMBER - SEE OTHER DETAIL

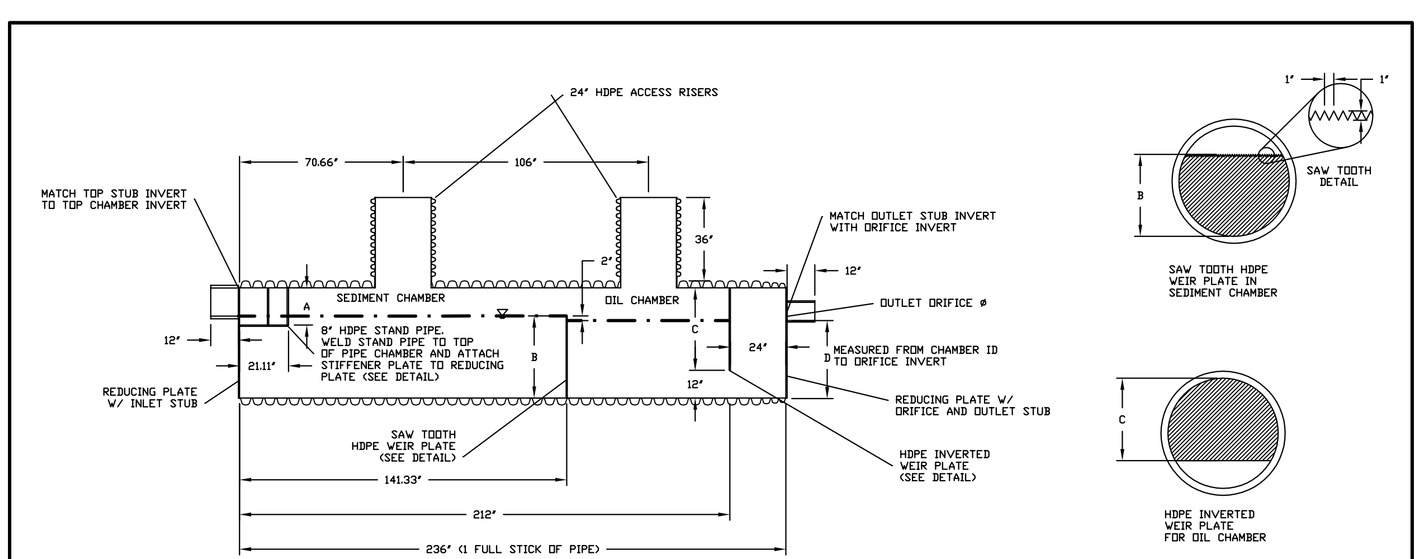

MODEL #	MAIN PIPE DIA.	TREAT. FLOW RATE	SIEVE SIZE	INLET STUB DIA.	OUTLET STUB DIA.	ORIFICE DIA.	A	B	C	D
3620WQAXX	36"	1.50 CFS	140	10"	10"	7.82"	13.9"	26"	24"	24"
3620WQBXX	36"	0.7 CFS	200	10"	10"	5.35"	13.9"	26"	24"	24"
4220WQAXX	42"	1.73 CFS	140	12"	12"	8.13"	16.1"	30"	30"	28"
4220WQBXX	42"	0.86 CFS	200	12"	12"	5.70"	16.1"	30"	30"	28"
4820WQAXX	48"	2.26 CFS	140	12"	12"	9.24"	16.1"	36"	36"	34"
4820WQBXX	48"	1.13 CFS	200	12"	12"	6.53"	16.1"	36"	36"	34"
6020WQAXX	60"	2.95 CFS	140	15"	15"	10.05"	18.9"	45"	48"	43"
6020WQBXX	60"	1.47 CFS	200	15"	15"	7.1"	18.9"	45"	48"	43"

XX DENOTES A BY-PASS SIZE OF 15", 18", 24", 30", 36", 42", 48", OR 60"
XX=00 DENOTES UNITS W/OUT A BY-PASS.

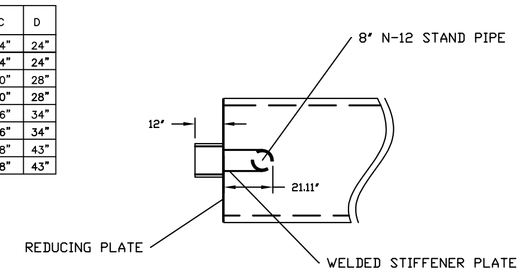

DISPERSION BAFFLE DETAIL
(TOP VIEW)

NOTES:

1. ALL DIMENSIONS ARE NOMINAL
2. ALL FITTING CONNECTIONS WILL BE MADE USING A STANDARD BELL/BELL OR SPLIT COUPLER

© 2007 ADS, INC.

REV.	DESCRIPTION	BY	MM/DD/YY	CHK'D
1	INCLUDE FLOW RATES & SIEVE SIZE	CKS	10/25/07	

ADVANCED DRAINAGE SYSTEMS, INC. ("ADS") HAS PREPARED THIS DETAIL BASED ON INFORMATION PROVIDED TO ADS. THIS DRAWING IS INTENDED TO DEPICT THE COMPONENTS AS REQUESTED. ADS HAS NOT PERFORMED ANY ENGINEERING OR DESIGN SERVICES FOR THIS PROJECT, NOR HAS ADS INDEPENDENTLY VERIFIED THE INFORMATION SUPPLIED. THE INSTALLATION DETAILS PROVIDED HEREIN ARE GENERAL RECOMMENDATIONS AND ARE NOT SPECIFIC FOR THIS PROJECT. THE DESIGN ENGINEER SHALL REVIEW THESE DETAILS PRIOR TO CONSTRUCTION. IT IS THE DESIGN ENGINEERS RESPONSIBILITY TO ENSURE THE DETAILS PROVIDED HEREIN MEETS OR EXCEEDS THE APPLICABLE NATIONAL, STATE, OR LOCAL REQUIREMENTS AND TO ENSURE THAT THE DETAILS PROVIDED HEREIN ARE ACCEPTABLE FOR THIS PROJECT.

STANDARD 20-FT STORM WATER QUALITY UNIT

DRAWING NUMBER STD-501

ADS
4640 TRUEMAN BLVD
HILLIARD, OHIO 43026
ADVANCED DRAINAGE SYSTEMS, INC.

DR. CKS
DATE 10/25/06
SCALE NTS
SHT OF

CHECKED BY: JER	SCALE: AS SHOWN	JOB NUMBER: 13619	PLAN NUMBER: 4-L-952	FIELD BOOK REF(S):
DRAWN BY: BFM	DATE: FEBRUARY 15, 2015	SHEET NUMBER: 6 OF 6	COMPS: 9839	PLAN REF(S): NONE

REVISIONS

NO.	DESCRIPTION	DATE	BY

CONSTRUCTION DETAILS
FOR
EQUIPMENT CARE CENTER OF GRAFTON
IN
NORTH GRAFTON, MASSACHUSETTS

PREPARED FOR:
R.P. MASIELLO, INC.
38 MAIN STREET
BOYLSTON, MASSACHUSETTS 01505
(508) 869-6501

COMMONWEALTH OF MASSACHUSETTS
BRIAN F. MILISCI
CIVIL
#38102
REGISTERED PROFESSIONAL ENGINEER

WHITMAN & BINGHAM ASSOCIATES
REGISTERED ENGINEERS & LAND SURVEYORS
510 MECHANIC STREET
LEOMINSTER, MASSACHUSETTS 01453
TEL: (978) 537-5506
FAX: (978) 537-1423