TATA & HOWARD

May 12, 2016

Mr. Joseph Laydon, Town Planner
Grafton Municipal Center
30 Providence Road
Grafton, MA 01519

Subject: Trinity Avenue Pump Station-25 R Trinity Avenue
Special Permit and Site Plan Review
Town of Grafton, Massachusetts

Dear Mr. Laydon:

On behalf of the Grafton Water District, Tata & Howard, Inc. has prepared responses to the questions raised at the Planning Board hearing on Monday, April 11, 2016 related to snow removal, generator sound emissions, and variance outcomes.

Abutters to 25R Trinity Avenue expressed concerns over snow storage in the cul-da-sac. Snow is presently stored in the vicinity of the proposed access road to the pump station site. The Town of Grafton will no longer be able to plow/store snow in the above listed area. The location of stored snow will ultimately be the Town of Grafton's decision once the access road to the pump station site is constructed. Should the amount and location of the snow storage become an issue, the Grafton Water District will move or remove the snow at the request of the abutters, where practical.

The proposed 150 kW propane generator will be located behind the proposed pump station building on a concrete pad within an enclosure supplied by the manufacturer. Specifications of one manufacturer's generator have been attached to this letter for reference. The weekly exercise mode will generate approximately 66 dB at 23-feet.

The Zoning Board of Appeals approved the following two variances listed in the Application for Special Permit and Site Plan Approval:

- 3.2.3.2 – Intensity of Use Schedule - Minimum frontage/lot width of 125 feet. The existing lot frontage is 10-feet.
- 3.3.3.4 - Not less than ten (10) feet from the property line around the perimeter of the property must be stabilized with vegetation, landscaping, or plant materials. Existing parcel geometry does not allow for the stabilized vegetation border to be constructed.

Tata & Howard
67 Forest Street | Marlborough, MA 01752
T: 508-303-9400 | F: 508-449-9400
www.tataandhoward.com

Other Offices
MA | NH | CT | ME | VT | AZ | TX

We will continue to work closely with the Town of Grafton on this important project. If any additional information or clarifications are required, please do not hesitate to contact our office to expedite the special permit and site plan review and approval.

Sincerely,
TATA & HOWARD, INC.

Karen Gracey

Karen L. Gracey, P.E.
Vice President

cc: Grafton Conservation Commission
Matthew Pearson, Grafton Water District
Jeffrey M. Walsh, P.E., Vice President Graves Engineering Inc.

Standby Generators

GENERAC®

Standby Generators
Liquid-Cooled Gaseous Engine

INCLUDES:

- Two Line LCD Tri-Lingual Digital Nexus™ Controller
- Isochronous Electronic Governor
- Sound Attenuated Enclosure
- Closed Coolant Recovery System
- Smart Battery Charger
- UV/Ozone Resistant Hoses
- ±1% Voltage Regulation
- Natural Gas or LP Operation
- 2 Year Limited Warranty
- UL 2200 Listed

Standby Power Rating

Model QT070 (Aluminum - Bisque) - 70 kW 60 Hz
Model QT080 (Aluminum - Bisque) - 80 kW 60 Hz
Model QT100 (Aluminum - Bisque) - 100 kW 60 Hz
Model QT130 (Aluminum - Bisque) - 130 kW 60 Hz
Model QT150 (Aluminum - Bisque) - 150 kW 60 Hz

c UL us LISTED

USA ENGINEERED & BUILT* *Built in the USA using domestic and foreign parts

QUIET TEST™

Meets EPA Emission Regulations
70, 100, 130 & 150 kW meet CA/MA emissions requirement with optional catalyst
80 kW not for sale in CA/MA

FEATURES

- **INNOVATIVE DESIGN & PROTOTYPE TESTING** are key components of GENERAC'S success in "IMPROVING POWER BY DESIGN." But it doesn't stop there. Total commitment to component testing, reliability testing, environmental testing, destruction and life testing, plus testing to applicable CSA, NEMA, EGSA, and other standards, allows you to choose GENERAC POWER SYSTEMS with the confidence that these systems will provide superior performance.

- **TEST CRITERIA:**
  - ✓ **PROTOTYPE TESTED**
  - ✓ **SYSTEM TORSIONAL TESTED**
  - ✓ **NEMA MG1-22 EVALUATION**
  - ✓ **MOTOR STARTING ABILITY**

- **SOLID-STATE, FREQUENCY COMPENSATED VOLTAGE REGULATION.** This state-of-the-art power maximizing regulation system is standard on all Generac models. It provides optimized FAST RESPONSE to changing load conditions and MAXIMUM MOTOR STARTING CAPABILITY by electronically torque-matching the surge loads to the engine. Digital voltage regulation at ±1%.

- **SINGLE SOURCE SERVICE RESPONSE** from Generac's extensive dealer network provides parts and service know-how for the entire unit, from the engine to the smallest electronic component.

- **GENERAC TRANSFER SWITCHES.** Long life and reliability are synonymous with GENERAC POWER SYSTEMS. One reason for this confidence is that the GENERAC product line includes its own transfer systems and controls for total system compatibility.

GENERAC® ISO 9001:2008

GENERAC®

70 • 80 • 100 • 130 • 150 kW

application & engineering data

GENERATOR SPECIFICATIONS

Type	Synchronous
Rotor Insulation Class	H
Stator Insulation Class	H
Telephone Interference Factor (TIF)	<50
Alternator Output Leads 1-Phase	4 wire
Alternator Output Leads 3-Phase	6 wire (70, 80 & 150 kW) or 12 wire (100 & 130 kW)
Bearings	Sealed Ball
Coupling	Flexible Disc (70, 80 & 150 kW) or Gear Drive (100 & 130 kW)
Excitation System	Brushless

VOLTAGE REGULATION

Type	Electronic
Sensing	Single Phase
Regulation	± 1%

GOVERNOR SPECIFICATIONS

Type	Electronic
Frequency Regulation	Isochronous
Steady State Regulation	± 0.25%

ELECTRICAL SYSTEM

Battery Charge Alternator	12 Volt 30 Amp
Static Battery Charger	2 Amp
Recommended Battery (battery not included)	Group 24F, 525 CCA (70, 80 & 150 kW) or Group 27F, 700 CCA (100 & 130 kW)
System Voltage	12 Volts

GENERATOR FEATURES

Revolving field heavy duty generator
Directly connected to the engine
Operating temperature rise 120 °C above a 40 °C ambient
Class H insulation is NEMA rated
All models fully prototyped tested

ENCLOSURE FEATURES

Aluminum weather protective enclosure	Ensures protection against mother nature. Electrostatically applied textured epoxy paint for added durability.
Enclosed critical grade muffler	Quiet, critical grade muffler is mounted inside the unit to prevent injuries.
Small, compact, attractive	Makes for an easy, eye appealing installation.
SAE	Sound attenuated enclosure ensures quiet operation.

ENGINE SPECIFICATIONS: 80 kW

Make	Generac
Model	V-Type
Cylinders	8
Displacement (Liters)	5.4
Bore (in/mm)	3.55/90.2
Stroke (in/mm)	4.17/105.9
Compression Ratio	9:1
Intake Air System	Naturally Aspirated
Lifter Type	Hydraulic

ENGINE SPECIFICATIONS: 70, 100, 130 & 150 kW

Make	Generac
Model	V-Type
Cylinders	10
Displacement (Liters)	6.8
Bore (in/mm)	3.55/90.2
Stroke (in/mm)	4.17/105.9
Compression Ratio	9:1
Intake Air System	Naturally Aspirated
Lifter Type	Hydraulic

ENGINE LUBRICATION SYSTEM

Oil Pump Type	Gear
Oil Filter Type	Full flow spin-on cartridge
Crankcase Capacity (qt/l)	5/4.7 (70, 100, 130 & 150 kW) or 6/5.7 (80 kW)

ENGINE COOLING SYSTEM

Type	Closed
Water Pump	Belt driven
Fan Speed (rpm)	2300 - 70 kW 2174 - 80 kW 1670 - 100 kW 1950 - 130 kW 2200 - 150 kW
Fan Diameter (in/mm)	22/558.8 (70 kW) or 26/660.4 (80, 100, 130 & 150 kW)
Fan Mode	Pusher (70 kW) or Puller (80, 100, 130 & 150 kW)

FUEL SYSTEM

Fuel Type	Natural gas, propane vapor
Carburetor	Down Draft
Secondary Fuel Regulator	Standard
Fuel Shut Off Solenoid	Standard
Operating Fuel Pressure	11-14" water column/21-26 mm HG

(All ratings in accordance with BS5514, ISO3046, ISO8528, SAE J1349 and DIN6271)

GENERAC®

70 • 80 • 100 • 130 • 150 kW

operating data

GENERATOR OUTPUT VOLTAGE/kW - 60 Hz

		kW LPG	Amp LPG	kW Nat. Gas	Amp Nat. Gas	CB Size (Both)
QT070	120/240 V, 1Ø, 1.0 pf	67	292	64	267	300
	120/208 V, 3Ø, 0.8 pf	70	243	67	232	300
	120/240 V, 3Ø, 0.8 pf	70	211	67	201	250
	277/480 V, 3Ø, 0.8 pf	70	105	67	101	125
QT080	120/240 V, 1Ø, 1.0 pf	77	333	77	333	400
	120/208 V, 3Ø, 0.8 pf	80	278	80	278	300
	120/240 V, 3Ø, 0.8 pf	80	241	80	240	300
	277/480 V, 3Ø, 0.8 pf	80	120	80	120	150
QT100	120/240 V, 1Ø, 1.0 pf	100	417	89	371	500
	120/208 V, 3Ø, 0.8 pf	100	347	94	326	400
	120/240 V, 3Ø, 0.8 pf	100	301	94	283	350
	277/480 V, 3Ø, 0.8 pf	100	150	94	141	175
QT130	120/240 V, 1Ø, 1.0 pf	130	542	117	488	600
	120/208 V, 3Ø, 0.8 pf	130	451	122	423	500
	120/240 V, 3Ø, 0.8 pf	130	391	122	367	450
	277/480 V, 3Ø, 0.8 pf	130	195	122	183	225
QT150	120/240 V, 1Ø, 1.0 pf	144	625	136	567	700
	120/208 V, 3Ø, 0.8 pf	150	520	142	493	600
	120/240 V, 3Ø, 0.8 pf	150	451	142	427	500
	277/480 V, 3Ø, 0.8 pf	150	225	142	214	250

SURGE CAPACITY IN AMPS

		Voltage Dip @ < .4 pf	
		15%	30%
QT070	120/240 V, 1Ø	129	356
	120/208 V, 3Ø	194	471
	120/240 V, 3Ø	168	408
	277/480 V, 3Ø	83	201
QT080	120/240 V, 1Ø	174	435
	120/208 V, 3Ø	186	466
	120/240 V, 3Ø	161	404
	277/480 V, 3Ø	70	175
QT100	120/240 V, 1Ø	150	413
	120/208 V, 3Ø	186	452
	120/240 V, 3Ø	161	392
	277/480 V, 3Ø	107	261
QT130	120/240 V, 1Ø	236	648
	120/208 V, 3Ø	364	885
	120/240 V, 3Ø	315	767
	277/480 V, 3Ø	161	390
QT150	120/240 V, 1Ø	486	1214
	120/208 V, 3Ø	534	1334
	120/240 V, 3Ø	463	1156
	277/480 V, 3Ø	250	624

ENGINE FUEL CONSUMPTION

		Natural Gas		Propane		
		(ft^3/hr)	(m^3/hr)	(gal/hr)	(l/hr)	(ft^3/hr)
QT070	Exercise cycle	110	3.1	1.2	4.6	44
	25% of rated load	260	7.4	2.85	10.8	104
	50% of rated load	500	14.2	5.46	20.8	200
	75% of rated load	696	19.8	7.62	29.1	280
	100% of rated load	1020	29	11.17	42.6	411
QT080	Exercise cycle	95	2.7	1	3.9	53
	25% of rated load	549.5	15.6	6.99	1.85	126
	50% of rated load	784.4	22.2	10.16	2.68	241
	75% of rated load	1024.8	29.0	13.11	3.46	336
	100% of rated load	1252.2	35.5	15.71	4.15	465
QT100	Exercise cycle	130	3.7	1.4	5.4	52
	25% of rated load	371	10.5	4.1	15.5	149
	50% of rated load	713	20.3	7.9	29.8	287
	75% of rated load	991	28.2	11	41.5	400
	100% of rated load	1260	35.8	13.9	52.6	507
QT130	Exercise cycle	135	3.8	1.4	5.7	55
	25% of rated load	482	13.7	5.3	20	193
	50% of rated load	927	26.3	10.3	38.7	373
	75% of rated load	1292	36.7	14.3	54	520
	100% of rated load	1786	50.8	19.8	74.6	719
QT150	Exercise cycle	155	4.4	1.7	6.5	63
	25% of rated load	556	15.8	6.09	23.2	224
	50% of rated load	1070	30.4	11.72	44.7	431
	75% of rated load	1491	42.4	16.33	62.3	600
	100% of rated load	2061	58.6	22.57	86.1	830

Note: **Fuel pipe must be sized for full load.**

For Btu content, multiply gal/hr x 90950 (LP) or ft^3/hr x 1000 (NG).

For megajoule content, multiply l/hr x 25.35 (LP) or m^3/hr x 37.26 (NG).

Refer to "Emissions Data Sheets" for maximum fuel flow for EPA and SCAQMD permitting purposes.

STANDBY RATING: Standby ratings apply to installations served by a reliable utility source. The standby rating is applicable to varying loads for the duration of a power outage. There is no overload capability for this rating. Ratings are in accordance with ISO-3046-1. Design and specifications are subject to change without notice.

GENERAC®

70 • 80 • 100 • 130 • 150 kW

operating data

ENGINE COOLING

	70 kW	80 kW	100 kW	130 kW	150 kW
Air flow (inlet air including alternator and combustion air in ft³/min)	5200/147.2	5300/150.1	5500/155.7	6450/182.6	7800/220.9
System coolant capacity (gal/liters)	4.5/17	4/15.1	4.5/17	4.5/17	4.5/17
Heat rejection to coolant (BTU/hr)	287,000/302.8	316,000/333.4	342,000/360.8	496,000/523.3	568,000/599.3
Maximum operation air temperature on radiator (°C/°F)	60/150				
Maximum ambient temperature (°C/°F)	50/140				

COMBUSTION REQUIREMENTS

Flow at rated power (cfm/cmm)	205/5.8	143/4	262/7.4	336/9.5	410/11.6

SOUND EMISSIONS

Sound output in dB(A) at 23 ft (7 m) with generator in exercise mode*	64	65	68	69	66
Sound output in dB(A) at 23 ft (7 m) with generator operating at normal load*	72	74	72	75	79

*Sound levels are taken from the front of the generator. Sound levels taken from other sides of the generator may be higher depending on installation parameters.

EXHAUST

Exhaust flow at rated output (cfm/cmm)	557/15.8	720/20.4	888/25.1	1119/31.7	1535/43.5
Exhaust temperature at muffler outlet (°C/°F)	477/890	796/1465	516/960	521/970	593/1100

ENGINE PARAMETERS

Rated Synchronous rpm	1800	3600	2300	2970	3600

POWER ADJUSTMENT FOR AMBIENT CONDITIONS

Temperature Deration ..... 3% for every 10 °C above 25 °C or 1.65% for every 10 °F above 77 °F
Altitude Deration (70,100,130 & 150) ..... 1% for every 100 m above 183 m or 3% for every 1000 ft above 600 ft
Altitude Deration (80 kW) ..... 1% for every 100 m above 915 m or 3% for every 1000 ft above 3000 ft

CONTROLLER FEATURES

2-Line Plain Text LCD Display ..... Simple user interface for ease of operation.
Mode Switch: Auto ..... Automatic Start on Utility failure. 7 day exerciser
Off ..... Stops unit. Power is removed. Control and charger still operate.
Manual ..... Start with starter control, unit stays on. If utility fails, transfer to load takes place.
Programmable start delay between 10-30 seconds ..... Standard
Engine Start Sequence ..... Cyclic cranking: 16 sec on, 7 rest (90 sec maximum duration)
Engine Warm-up ..... 5 sec
Engine Cool-Down ..... 1 min
Starter Lock-out ..... Starter cannot re-engage until 5 sec after engine has stopped.
Smart Battery Charger ..... Standard
Automatic Voltage Regulation with Over and Under Voltage Protection ..... Standard
Automatic Low Oil Pressure Shutdown ..... Standard
Overspeed Shutdown ..... Standard, 72 Hz
High Temperature Shutdown ..... Standard
Overcrank Protection ..... Standard
Safety Fused ..... Standard
Failure to Transfer Protection ..... Standard
Low Battery Protection ..... Standard
50 Event Run Log ..... Standard
Future Set Capable Exerciser ..... Standard
Incorrect Wiring Protection ..... Standard
Internal Fault Protection ..... Standard
Common External Fault Capability ..... Standard
Governor Failure Protection ..... Standard

70 • 80 • 100 • 130 • 150 kW

available accessories

Model #	Product	Description
006463-3	Mobile Link™	Generac's Mobile Link allows you to check the status of your generator from anywhere that you have access to an Internet connection from a PC or with any smart device. You will even be notified when a change in the generator's status occurs via e-mail or text message. Note: Harness Adapter Kit required. Available in the U.S. only.
006478-0	Harness Adapter Kit	The Harness Adapter Kit is required to make liquid-cooled units compatible with Mobile Link™.
005632-1 - 70, 80 & 150 kW 005633-0 - 100 & 130 kW	Cold Weather Kit	If the temperature regularly falls below 32 °F (0 °C), install a cold weather kit to maintain optimal battery temperature. Kit consists of battery warmer with thermostat built into the wrap.
005620-0 - 70, 100 & 130 kW 006204-0 - 80 kW 005667-0 - 150 kW	Extreme Cold Weather Kit	Recommended where the temperature regularly falls below 32 °F (0 °C) for extended periods of time. For liquid cooled units only.
005651-0	Base Plug Kit	Add base plugs to the base of the generator to keep out debris.
005703-0	Paint Kit	If the generator enclosure is scratched or damaged, it is important to touch-up the paint to protect from future corrosion. The paint kit includes the necessary paint to properly maintain or touch-up a generator enclosure.
005660-0 - 70, 100, 130 & 150 kW 006915-0 - 80 kW	Scheduled Maintenance Kit	The Liquid-Cooled Scheduled Maintenance Kits offer all the hardware necessary to perform complete maintenance on Generac liquid-cooled generators.
006664-0	Local Wireless Monitor	Completely wireless and battery powered, Generac's wireless remote monitor provides you with instant status information without ever leaving the house.
006665-0	Wireless Remote Extension Harness	Recommended for use with the Wireless Remote on units up to 60 kW, required for use on units 70 kW or greater.
006873-0	Smart Management Module (50 Amps)	Smart Management Modules are used in conjunction with the Automatic Transfer Switch to increase its power management capabilities. It provides additional power management flexibility not found in any other power management system.

GENERAC®

70 • 80 • 100 • 130 • 150 kW

interconnections

Drawing #0H7452-D

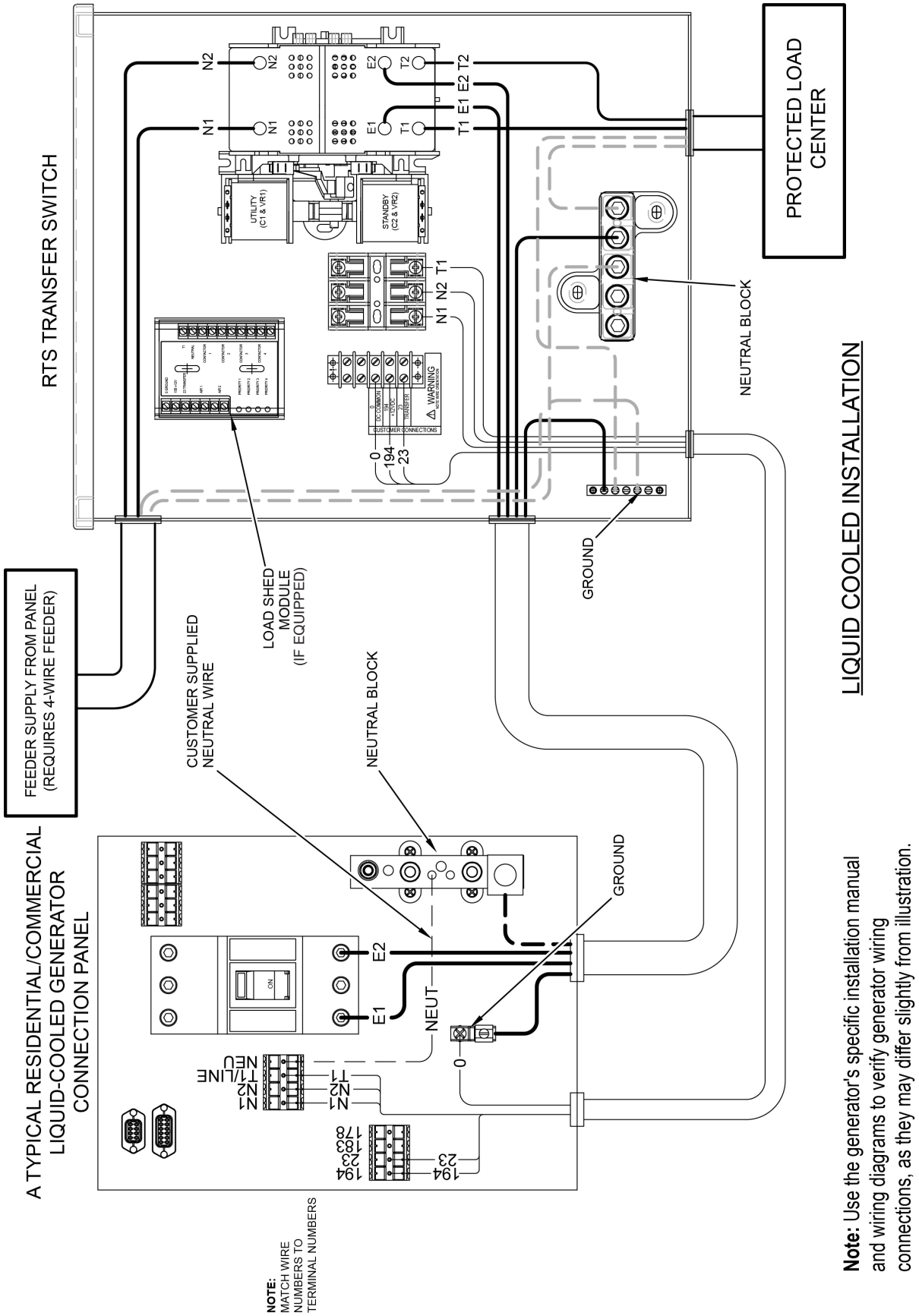

Note: Use the generator's specific installation manual and wiring diagrams to verify generator wiring connections, as they may differ slightly from illustration.

70 kW

WEIGHT DATA				
ENGINE/KW	ENCLOSURE MATERIAL	WEIGHT (GENSET ONLY) KG [LBS]	WEIGHT (WOODEN SHIPPING CRATE/SKID) KG [LBS]	SHIPPING WEIGHT (SKID AND GENSET) KG [LBS]
5.4L/55KW				
	ALUMINUM	829 [1828]	79 [175]	909 [2003]
6.8L/70KW				
	ALUMINUM	925 [2040]	79 [175]	1005 [2215]

NOTES:

1) MINIMUM RECOMMENDED CONCRETE PAD SIZE:1240 (48.8") WIDE X 2756 (108.5") LONG. REFERENCE INSTALLATION GUIDE SUPPLIED WITH UNIT FOR CONCRETE PAD GUIDELINES.
2) ALLOW SUFFICIENT ROOM ON ALL SIDES OF THE GENERATOR FOR MAINTENANCE AND SERVICING. THIS UNIT MUST BE INSTALLED IN ACCORDANCE WITH CURRENT APPLICABLE NFPA 37 AND NFPA 70 STANDARDS AS WELL AS ANY OTHER FEDERAL, STATE AND LOCAL CODES FOR MINIMUM DISTANCES FROM OTHER STRUCTURES.
3) CIRCUIT BREAKER INFORMATION: SEE SPECIFICATION SHEET WITHIN OWNERS MANUAL.
4) INSIDE STUB-UP AREA FOR AC LOAD LEAD CONDUIT CONNECTION, NEUTRAL CONNECTION, BATTERY CHARGER 120 VOLT AC (.5 AMP MAX.) CONNECTION, AND ACCESS TO TRANSFER SWITCH CONTROL WIRES. REMOVE FRONT COVER FOR ACCESS.

4A) FIELD CUT HOLE IS ONLY REQUIRED FOR MOUNTING OF GENERATOR ON AN EXISTING PAD.

5) REFERENCE OWNERS MANUAL FOR LIFTING WARNINGS.
6) REMOVE EITHER LEFT OR RIGHT HAND SIDE PANEL TO ACCESS EXHAUST MUFFLERS.

SERVICE ITEM ACCESSIBILITY CHART

SERVICE ITEM	5.4L 55KW	6.8L 70KW
OIL FILL CAP	THRU RIGHT FRONT DOOR	
OIL DIP STICK	THRU LEFT FRONT DOOR	
OIL FILTER	THRU LEFT FRONT DOOR	
OIL DRAIN HOSE	THRU RIGHT FRONT DOOR	
RADIATOR DRAIN HOSE	THRU LEFT FRONT DOOR	
AIR CLEANER ELEMENT	EITHER FRONT DOOR	
SPARK PLUGS	BOTH FRONT DOORS	
MUFFLERS	SEE NOTE 6	
FAN BELT	EITHER FRONT DOOR	
BATTERY	THRU RIGHT REAR DOOR	

REFERENCE OWNERS MANUAL FOR PERIODIC REPLACEMENT PART LISTINGS

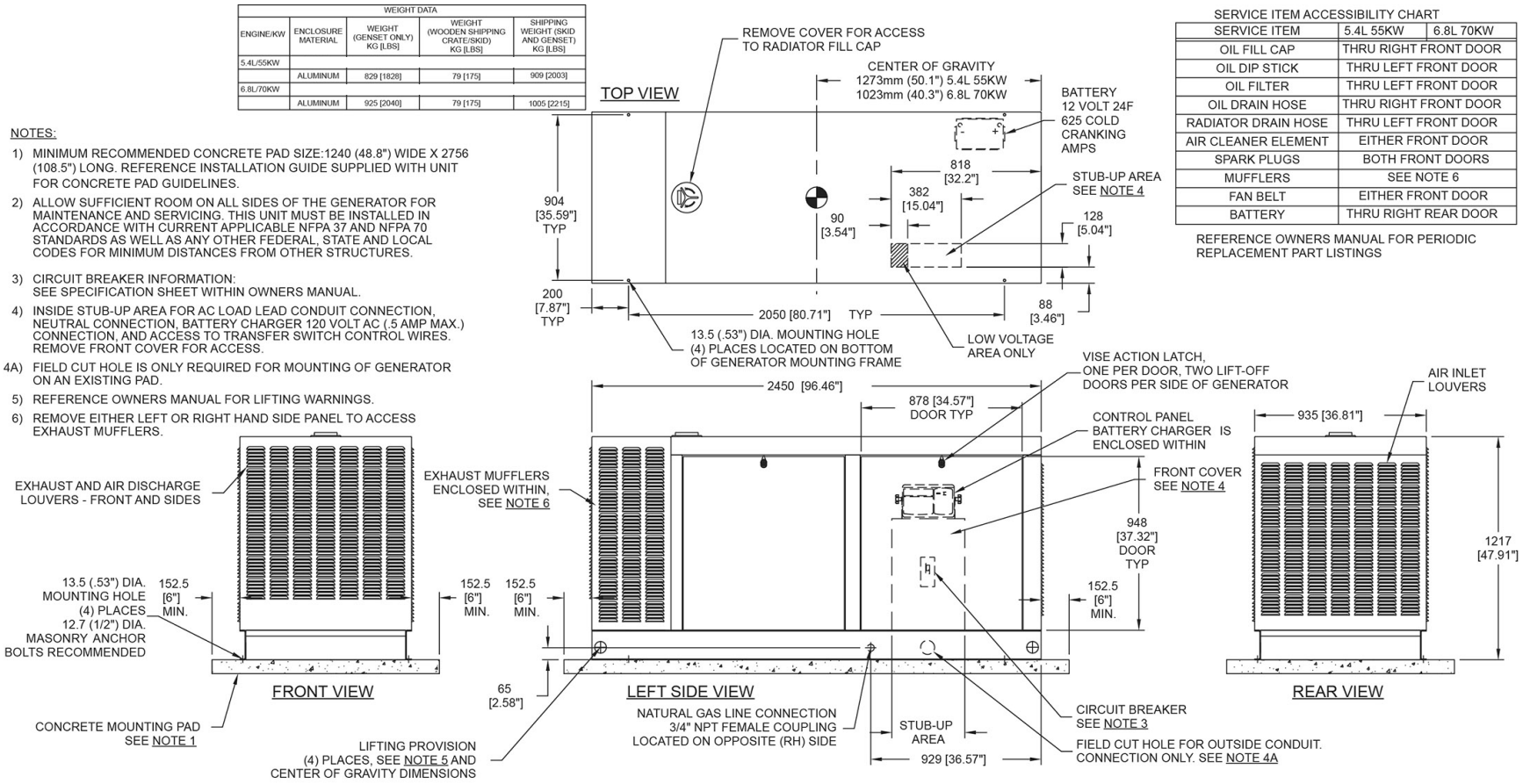

DIMENSIONS: MM [INCH]

GENERAC®

installation layout

Drawing #0F6287-E

Standby Generators

80 kW

Drawing #0L3178-B

installation layout

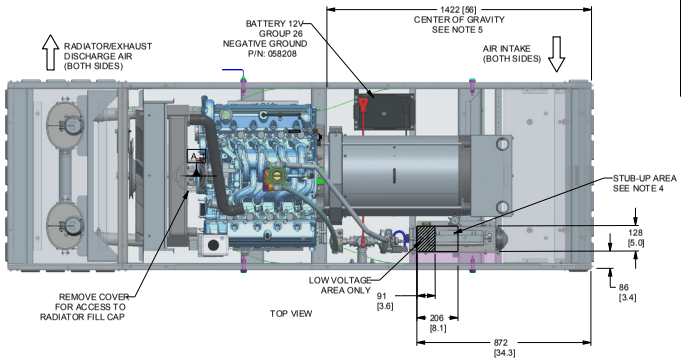

SERVICE ITEM	5.4L
OIL FILL CAP	LEFT DOOR
OIL DIP STICK	LEFT DOOR
OIL FILTER	LEFT DOOR
OIL DRAIN HOSE	RIGHT DOOR
RADIATOR DRAIN HOSE	LEFT DOOR
AIR CLEANER ELEMENT	EITHER DOOR
SPARK PLUGS	EITHER DOOR
MUFFLER	SEE NOTE 12
FAN BELT	EITHER DOOR
BATTERY	RIGHT DOOR

REFERENCE OWNERS MANUAL FOR PERIODIC REPLACEMENT PART LISTINGS.

NOTES:

1. MINIMUM RECOMMENDED CONCRETE PAD SIZE: 1241 (49") WIDE 3228 (127") LONG. REFERENCE INSTALLATION GUIDE SUPPLIED WITH UNIT FOR CONCRETE PAD GUIDELINES.
2. ALLOW SUFFICIENT ROOM ON ALL SIDES OF THE GENERATOR FOR MAINTENANCE AND SERVICING. THIS UNIT MUST BE INSTALLED IN ACCORDANCE WITH CURRENT APPLICABLE NFPA 37 AND NFPA 70 STANDARDS AS WELL AS ANY OTHER FEDERAL, STATE, AND LOCAL CODES.
3. CONTROL PANEL / CIRCUIT BREAKER INFORMATION:
   - SEE SPECIFICATION SHEET OR OWNERS MANUAL
   - ACCESSIBLE THROUGH CUSTOMER ACCESS ASSEMBLY DOOR ON REAR OF GENERATOR.
4. INSIDE STUB-UP AREA FOR AC LOAD LEAD CONDUIT CONNECTION, NEUTRAL CONNECTION, BATTERY CHARGER 120 VOLT AC (.5 AMP MAX) CONNECTION AND ACCESS TO TRANSFER SWITCH CONTROL WIRES. REMOVE FRONT COVER FOR ACCESS.
5. CENTER OF GRAVITY AND WEIGHT MAY CHANGE DUE TO UNIT OPTIONS.
6. BOTTOM OF GENERATOR SET MUST BE ENCLOSED TO PREVENT PEST INTRUSION AND RECIRCULATION OF DISCHARGE AIR AND/OR IMPROPER COOLING AIR FLOW.
7. EXHAUST SYSTEM MAXIMUM BACK PRESSURE: 24 INCHES H2O.
8. REFERENCE OWNERS MANUAL FOR LIFTING WARNINGS.
9. MOUNTING BOLTS OR STUDS TO MOUNTING SURFACE SHALL BE 5/8-11 GRADE 5 (USE STANDARD SAE TORQUE SPECS)
10. MUST ALLOW FREE FLOW OF INTAKE AIR, DISCHARGE AIR AND EXHAUST. SEE SPEC SHEET FOR MINIMUM AIR FLOW AND MAXIMUM RESTRICTION REQUIREMENTS.
11. GENERATOR MUST BE INSTALLED SUCH THAT FRESH COOLING AIR IS AVAILABLE AND THAT DISCHARGE AIR FROM RADIATOR IS NOT RECIRCULATED.
12. REMOVE EITHER LEFT OR RIGHT HAND SIDE PANEL TO ACCESS EXHAUST MUFFLERS AND FAN BELT.
13. FIELD CUT HOLE IS ONLY REQUIRED FOR MOUNTING OF GENERATOR ON AN EXISTING PAD.

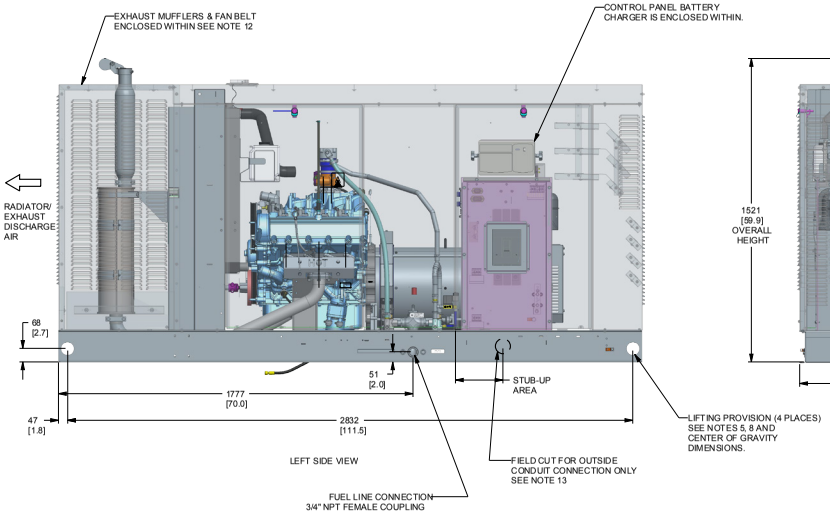

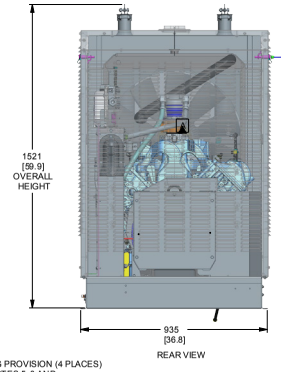

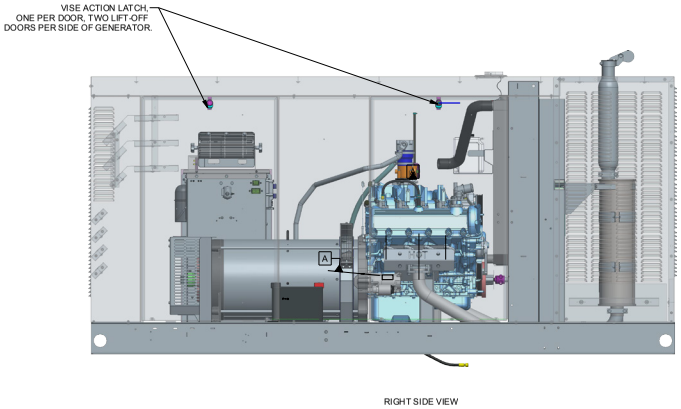

WEIGHT DATA				
ENGINE/KW	ENCLOSURE MATERIAL	WEIGHT GENSET ONLY KG [LBS]	WEIGHT SHIPPING SKID KG [LBS]	SHIPPING WEIGHT KG [LBS]
5.4L/80KW	AL	925 [2035]	79 [175]	1004 [2210]

DIMENSIONS: MM [INCH]

100 • 130 • 150 kW

installation layout

Drawing #0H4105-B

WEIGHT DATA				
ENGINE/KW	ENCLOSURE MATERIAL	WEIGHT (GENSET ONLY) KG [LBS]	WEIGHT (WOODEN SHIPPING CRATE/SKID) KG [LBS]	SHIPPING WEIGHT (SKID AND GENSET) KG [LBS]
6.8L 100KW				
	ALUMINUM	1148 [2531]	79 [175]	1227 [2706]
6.8L 130KW				
	ALUMINUM	1224 [2699]	79 [175]	1304 [2874]
6.8L 150KW				
	ALUMINUM	1130 [2492]	79 [175]	1210 [2667]

NOTES:

1) MINIMUM RECOMENDED CONCRETE PAD SIZE: 1240(48.8") WIDE X 3230 (127.2") LONG. REFERENCE INSTALLATION GUIDE SUPPLIED WITH UNIT FOR CONCRETE PAD GUIDELINES.
2) ALLOW SUFFICIENT ROOM ON ALL SIDES OF THE GENERATOR FOR MAINTENANCE AND SERVICING. THIS UNIT MUST BE INSTALLED IN ACORDANCE WITH CURRENT APPLICABLE NFPA 37 AND NFPA 70 STANDARDS AS WELL AS ANY OTHER FEDERAL, STATE AND LOCAL CODES FOR MINIMUM DISTANCES FROM OTHER STRUCTURES.
3) CIRCUIT BREAKER INFORMATION: SEE SPECIFICATION SHEET WITHIN OWNERS MANUAL.
4) INSIDE STUB-UP AREA FOR AC LOAD LEAD CONDUIT CONNECTION, NEUTRAL CONNECTION, BATTERY CHARGER 120 VOLT AC (.5 AMP MAX.) CONNECTION, AND ACCESS TO TRANSFER SWITCH CONTROL WIRES. REMOVE FRONT COVER FOR ACCESS.

4A) FIELD CUT HOLE IS ONLY REQUIRED FOR MOUNTING OF GENERATOR ON AN EXISTING PAD.

5) REFERENCE OWNERS MANUAL FOR LIFTING WARNINGS.
6) REMOVE EITHER LEFT OR RIGHT HAND SIDE PANEL TO ACCESS EXHAUST MUFFLERS AND FAN BELT.

SERVICE ITEM ACCESSIBILITY CHART

SERVICE ITEM	ACCESS 100KW 6.8L	130KW 6.8L	150KW 6.8L
OIL FILL CAP	THRU RIGHT FRONT DOOR		
OIL DIP STICK	THRU LEFT FRONT DOOR		
OIL FILTER	THRU LEFT FRONT DOOR		
OIL DRAIN HOSE	THRU RIGHT FRONT DOOR		
RADIATOR DRAIN HOSE	THRU LEFT FRONT DOOR		
AIR CLEANER ELEMENT	EITHER FRONT DOORS		
SPARK PLUGS	BOTH FRONT DOORS		
MUFFLERS	SEE NOTE 6		
FAN BELT	SEE NOTE 6		
BATTERY	THRU RIGHT REAR DOOR		
*GEARBOX FILL & DRAIN	THRU RIGHT REAR DOOR		

*NOTE: EXCLUDING 6.8L 150KW UNITS
REFERENCE OWNERS MANUAL FOR PERIODIC REPLACEMENT PART LISTINGS

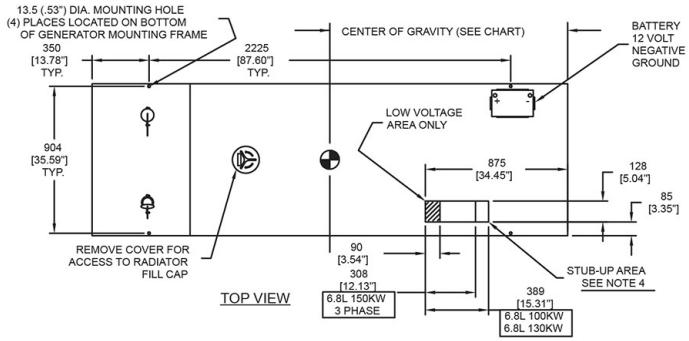

TOP VIEW

CENTER OF GRAVITY
1275 (50.2") - 100KW 6.8L
1230 (48.4") - 130KW 6.8L
1315 (51.8") - 150KW 6.8L

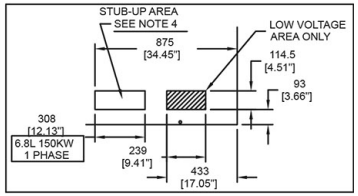

150KW SINGLE PHASE STUB-UP AREA

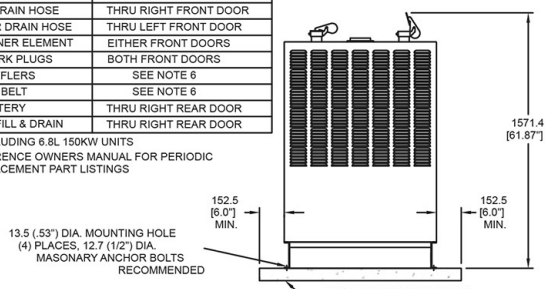

FRONT VIEW

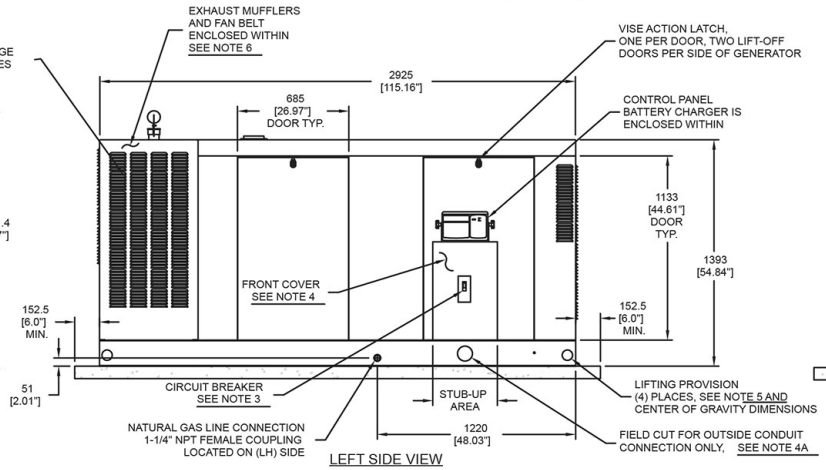

LEFT SIDE VIEW

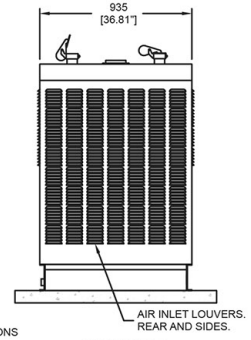

REAR VIEW

DIMENSIONS: MM [INCH]

Standby Generators

Generac Power Systems, Inc. • S45 W29290 HWY. 59, Waukesha, WI 53189 • generac.com

©2016 Generac Power Systems, Inc. All rights reserved. All specifications are subject to change without notice. Bulletin 0199370SBY-J Printed in U.S.A. 01/11/16