PROPOSED SITE DEVELOPMENT
CEC SOLAR #1056 LLC

SITE DRAWINGS

ISSUED FOR: PERMITTING
DATE ISSUED: AUGUST 12, 2015
LATEST ISSUE:

207 PROVIDENCE ROAD
GRAFTON, MASSACHUSETTS

SCALE: 1"=600'

INDEX TO DRAWINGS

SHEET NO.	DRAWING TITLE
	TITLE SHEET
N-1	NOTES & LEGEND
EC-1	EXISTING CONDITIONS
SL-1	SITE LAYOUT
SGD-1	SOLAR ARRAY GRADING & DRAINAGE
PP-1 & PP-2	ACCESS ROAD PLAN & PROFILES
EROS-1	EROSION CONTROL
LAND-1	LANDSCAPE PLAN
VS-1 & VS-2	VIEW STUDIES
DET-1	SITE DETAILS

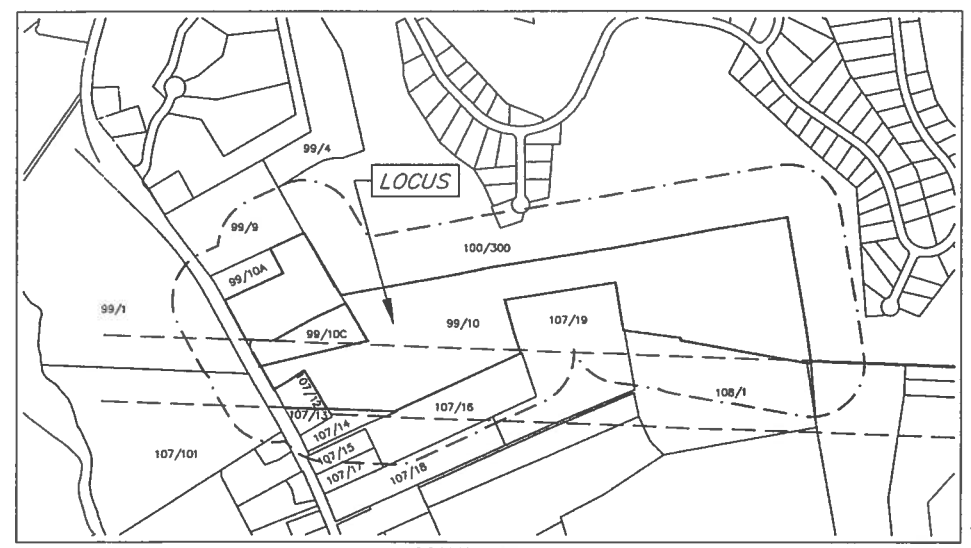

SCALE: 1"=500'

300' NOTIFICATION LINE
PROJECT SITE

LOT NO.	OWNER OF RECORD
99/1	JOHN H. MAGILL
99/4	HILLVIEW ESTATE INC. TRUSTEE
99/9	HILLVIEW ESTATES INC. TRUSTEE
99/10A	JOHN D. KIMBERLY KELL
99/10C	SANDRA JEAN SHIELDS
100/300	MAGILL ASSOCIATES
107/12	NEW ENGLAND POWER COMPANY
107/13	NEW ENGLAND POWER COMPANY
107/14	LAURA A. & PRIMO BORELLI III
107/15	WALTER LUSSIER
107/16	ROBERT HUHOWSKI & STEPHEN A. HUCHOWSKI
107/17	ROBERT HUHOWSKI & STEPHEN A. HUCHOWSKI
107/18	JOHN A. GENDRON & JOYCE A. GIBREE
107/19	MARTIN D. SZERLAG JR. & FRANK J. SZERLAG
107/101	BROADMEADOW REALTY LLC
108/1	SUSAN TOMKIEWICZ ET ALS TRUSTEES

PROPOSED
SITE
DEVELOPMENT

MAP 99, LOT 10

207 PROVIDENCE ROAD
GRAFTON, MA

RECEIVED

AUG 14 2015

PLANNING BOARD
GRAFTON, MA

ENGINEER:

FIELD ENGINEERING CO., INC.
11D INDUSTRIAL DRIVE
P.O. BOX 1178
MATTAPOISETT, MASSACHUSETTS 02739

APPLICANT:

CEC SOLAR #1056 LLC
146 W. BOYLSTON DRIVE
WORCESTER, MASSACHUSETTS 01606

PROPERTY OWNERS:

ROBERT & KAREN KELL
207 PROVIDENCE ROAD
GRAFTON, MA 01519-1506

PROJECT LOCATION:

207 PROVIDENCE ROAD
ASSESSORS MAP 99, LOT 10
GRAFTON, MASSACHUSETTS

FIELD ENGINEERING CO., INC.
CONSULTING ENGINEERS

11D INDUSTRIAL DRIVE
P.O. BOX 1178
MATTAPOISETT, MA 02739
TEL: (508) 758-2749
FAX: (508) 758-2849

THE CROCKER BUILDING
4 COURT STREET SUITE 104
TAUNTON, MA 02780
TEL: (508) 824-9279
FAX: (508) 824-9276

Project No.	Sheet
2035	1 OF 12

GENERAL CONSTRUCTION NOTES

1. THE MATERIALS AND CONSTRUCTION OF ALL THE PROPOSED STORM DRAINAGE UTILITIES SHALL CONFORM TO THE LOCAL D.P.W. STANDARDS AND SPECIFICATIONS AS WELL AS ALL APPLICABLE MASSDOT STANDARDS AND SPECIFICATIONS, LATEST EDITION. THE MATERIALS AND CONSTRUCTION OF ALL ELECTRIC, TELEPHONE & CATV UTILITIES SHALL CONFORM TO THE SPECIFICATIONS OF EACH RESPECTIVE PUBLIC UTILITY PROVIDER.

2. ALL CONSTRUCTION MATERIALS, AS WELL AS ALL MATERIAL SHOP DRAWINGS AND MANUFACTURERS DATA SHALL RECEIVE THE WRITTEN APPROVAL OF THE LOCAL D.P.W., AND THE PROJECT ENGINEER PRIOR TO FABRICATION AND INSTALLATION.

3. THE LOCATION AND ELEVATION OF ALL EXISTING UTILITIES SHALL BE CONSIDERED APPROXIMATE AND MUST BE VERIFIED BY THE CONTRACTOR PRIOR TO ANY CONSTRUCTION. UNDERGROUND UTILITIES SHOWN ARE FROM FIELD OBSERVATION AND THE BEST AVAILABLE RECORD INFORMATION AND ARE NOT WARRANTED TO BE EXACT, NOR IS IT WARRANTED THAT ALL UNDERGROUND PIPES OR STRUCTURES ARE SHOWN. THE CONTRACTOR SHALL CONTACT THE RESPECTIVE UTILITY COMPANIES RELATIVE TO THE LOCATION AND ELEVATION OF ALL EXISTING LINES.

4. THE CONTRACTOR SHALL CONTACT "DIG SAFE" AT 1-800-322-4844, 72 HOURS PRIOR TO ANY EXCAVATION AND/OR SUBSURFACE TESTING TO INFORM THE UTILITY COMPANIES OF ANY EXCAVATION.

5. WHENEVER EXISTING STRUCTURES ARE ENCOUNTERED, THE CONTRACTOR SHALL REPAIR ANY DAMAGED STRUCTURES OR REPLACE ANY REMOVED STRUCTURES, AND MAKE ANY IMPROVEMENTS ABOVE OR BELOW GRADE TO A CONDITION BETTER THAN OR EQUAL TO PRE-EXISTING CONDITIONS.

6. ALL EXCAVATED MATERIAL DESIGNATED FOR REUSE SHALL BE STOCKPILED ON SITE NO HIGHER THAN 8 FEET AND SHALL BE ENCLOSED BY TEMPORARY SILT FENCES TO PREVENT TRAVEL OF SEDIMENT TO ADJACENT PROPERTIES OR DRAINAGE WAYS.

7. THE CONTRACTOR SHALL BE RESPONSIBLE FOR THE DISPOSAL OF ALL WASTE MATERIAL AT AN APPROVED LOCATION. BURIAL OF WASTE MATERIAL ON SITE WILL NOT PERMITTED.

8. EROSION CONTROL MEASURES SHALL REMAIN IN PLACE AND MAINTAINED IN GOOD CONDITION UNTIL SURFACE RESTORATION IS COMPLETE AND ALL AREAS DISTURBED BY THE CONTRACTORS OPERATIONS ARE STABILIZED.

9. THE CONTRACTOR SHALL PROTECT ADJACENT PROPERTIES FROM ON SITE CONSTRUCTION ACTIVITIES AND REMOVE ANY SEDIMENT OR DEBRIS DEPOSITED THEREON IMMEDIATELY.

10. DRAINAGE GENERATED AS A RESULT OF TRENCH DEWATERING SHALL BE DISCHARGED TO EXISTING DRAINAGE COURSES WITH PROPER EROSION CONTROL AND DEWATERING MEASURES SUBJECT TO APPROVAL BY THE PROJECT ENGINEER. DIRECT DISCHARGE ONTO PAVEMENT, WETLANDS OR PRIVATE PROPERTY SHALL NOT BE ALLOWED WITHOUT CONSENT OF THE PROJECT ENGINEER AND THE OWNER.

11. THE OWNER AND THE PROJECT ENGINEER SHALL APPROVE ALL FIELD CHANGES IN THE WORK PRIOR TO IMPLEMENTATION. NO FIELD CHANGES SHALL BE MADE IN ANY SPECIFIED SITE WORK OR ANY MATERIALS FOR WHICH SHOP DRAWINGS HAVE BEEN SUBMITTED AND APPROVED WITHOUT PRIOR CONSULTATION OF THE OWNER AND THE PROJECT ENGINEER. ANY CHANGES SO MADE WITHOUT THE CONSENT OF THE OWNER AND THE PROJECT ENGINEER SHALL, IF DEEMED UNACCEPTABLE BY EITHER PARTY, BE PROMPTLY REMOVED FROM THE WORK AT NO EXPENSE TO THE OWNER OF THE PROJECT.

12. ANY WORK OR MATERIALS NOT MEETING THE APPROVED STANDARDS AND SPECIFICATIONS OF THE LOCAL DEPT. OF PUBLIC WORKS SHALL BE IMMEDIATELY REMOVED AND REPLACED AT THE FULL RESPONSIBILITY AND COST/EXPENSE TO THE CONTRACTOR.

13. THE CONTRACTOR SHALL BE RESPONSIBLE FOR ALL SITE PREPARATION, THE COORDINATION AND INSTALLATION OF ALL UTILITY CONNECTIONS, AND RELATED WORK INCLUDING BUT NOT LIMITED TO ALL NECESSARY SHORING, BRACING AND TRENCH DEWATERING FOR THE COMPLETE INSTALLATION OF THE PROJECT FACILITIES DURING CONSTRUCTION.

14. ALL OPEN EXCAVATIONS SHALL BE ADEQUATELY SAFEGUARDED IN STRICT ACCORDANCE WITH OSHA GUIDELINES AND TO THE SATISFACTION OF THE LOCAL POLICE DEPARTMENT. PROVISIONS FOR TEMPORARY BARRICADES, CAUTION SIGNS, LIGHTS AND OTHER MEANS TO PREVENT ACCIDENTS AND DAMAGE TO PROPERTY ARE THE RESPONSIBILITY OF THE CONTRACTOR. THE CONTRACTOR SHALL PROVIDE SUITABLE AND SAFE BRIDGES AND OTHER CROSSINGS FOR ACCOMMODATING TRAVEL BY PEDESTRIANS AND WORKMEN. NO EXCAVATIONS SHALL REMAIN OPEN OVERNIGHT.

15. REFER TO CONSTRUCTION DETAILS ON THIS SHEET FOR ADDITIONAL UTILITY REQUIREMENTS AND SPECIFICATIONS.

16. THESE PLANS HAVE BEEN PREPARED SPECIFICALLY AS SUPPLEMENTAL INFORMATION TO ACCOMPANY APPLICABLE PERMIT APPLICATIONS AND ARE NOT INTENDED FOR ACTUAL CONSTRUCTION WITHOUT THE EXPRESSED WRITTEN APPROVAL OF FIELD ENGINEERING CO., INC.

17. ALL SLOPES SHALL BE GRADED AT NO LESS THAN 3:1 UNLESS OTHERWISE SHOWN ON THE PLANS. LAND DISTURBING ACTIVITIES WITHIN ANY LANDSCAPE BUFFER LINES SHALL BE KEPT TO A MINIMUM. NO STOCKPILING OF RESIDUALS WILL BE ALLOWED WITHIN ANY LANDSCAPE BUFFER ZONE AREAS OR DESIGNATED NO DISTURBANCE AREAS.

18. IN THE EVENT OF AN INCONSISTENCY BETWEEN THESE SPECIFICATIONS AND THE LOCAL D.P.W., THE LOCAL D.P.W. SPECIFICATIONS SHALL GOVERN. THE CONTRACTOR SHALL OBTAIN ALL APPLICABLE SPECIFICATIONS FROM THE LOCAL DEPARTMENT OF PUBLIC WORKS.

EROSION & SEDIMENTATION CONTROL PROGRAM

1. ALL SEDIMENT AND EROSION CONTROL MEASURES SHALL BE EXECUTED IN ACCORDANCE WITH THE FOLLOWING REQUIREMENTS AND THE NPDES STORMWATER POLLUTION PREVENTION PLAN (SWPPP).

2. THOSE AREAS UNDERGOING ACTUAL CONSTRUCTION WILL BE LEFT IN AN UNTREATED OR UNVEGETATED CONDITION FOR A MINIMUM TIME. AREAS SHALL BE PERMANENTLY STABILIZED WITHIN 15 DAYS OF FINAL GRADING AND TEMPORARILY STABILIZED WITHIN 30 DAYS OF INITIAL DISTURBANCE OF THE SOIL IF THE DISTURBANCE IS WITHIN 100 FEET OF A WETLAND RESOURCE AREA. THE DISTURBED AREAS SHALL BE STABILIZED WITHIN 7 DAYS OR PRIOR TO ANY FORECASTED STORM EVENT.

3. SEDIMENT BARRIERS (SILT FENCE, HAY BARRIERS, ETC.) SHOULD BE INSTALLED PRIOR TO ANY SOIL DISTURBANCE OF THE UPGRADIENT CONTRIBUTING DRAINAGE AREA. MULCH NETTING SHALL BE USED TO ANCHOR MULCH IN ALL AREAS WITH SLOPES GREATER THAN 8.0% AFTER OCTOBER 1ST.

4. INSTALL SILT FENCE AT TOE OF SLOPE TO FILTER SILT FROM RUNOFF. SEE SILT FENCE DETAIL FOR PROPER INSTALLATION. SILT FENCE WILL REMAIN IN PLACE PER NOTE #5.

5. ALL EROSION CONTROL STRUCTURES WILL BE INSPECTED, REPLACED AND/OR REPAIRED EVERY 7 DAYS AND IMMEDIATELY FOLLOWING ANY SIGNIFICANT RAINFALL, SNOW MELT OR WHEN NO LONGER SERVICEABLE DUE TO SEDIMENT ACCUMULATION OR DECOMPOSURE. SEDIMENT DEPOSITS SHOULD BE REMOVED AFTER EACH STORM EVENT AND WHEN THE DEPOSITS REACH APPROXIMATELY ONE HALF THE HEIGHT OF THE BARRIER. SEDIMENT CONTROL DEVICES SHALL REMAIN IN PLACE AND BE MAINTAINED BY THE CONTRACTOR UNTIL AREAS UPSLOPE ARE STABILIZED BY TURF.

6. NO SLOPES, EITHER PERMANENT OR TEMPORARY, SHALL BE STEEPER THAN TWO TO ONE (2 TO 1) UNLESS NOTED OTHERWISE.

7. IF FINAL SEEDING OF THE DISTURBED AREAS IS NOT COMPLETED 45 DAYS PRIOR TO THE FIRST KILLING FROST, USE TEMPORARY MULCH OR DORMANT SEEDING TO PROTECT THE SITE AND DELAY SEEDING UNTIL THE NEXT RECOMMENDED SEEDING PERIOD.

8. TEMPORARY SEEDING OF DISTURBED AREAS THAT HAVE NOT BEEN FINAL GRADED SHALL BE COMPLETED 45 DAYS PRIOR TO THE FIRST KILLING FROST TO PROTECT FROM SPRING RUNOFF PROBLEMS.

9. REVEGETATION MEASURES WILL COMMENCE UPON COMPLETION OF CONSTRUCTION EXCEPT AS NOTED ABOVE. ALL DISTURBED AREAS NOT OTHERWISE STABILIZED WILL BE GRADED, SMOOTHED, AND PREPARED FOR FINAL SEEDING AS FOLLOWS:

   A) THE TOPSOIL SHALL HAVE A SANDY LOAM TEXTURE RELATIVELY FREE OF SUBSOIL MATERIAL, STONES, ROOTS, LUMPS OF SOIL, TREE LIMBS, TRASH OR CONSTRUCTION DEBRIS, AND SHALL BE PLACED TO A DEPTH OF FOUR (4) INCHES ON ALL LOAM AND SEED AREAS OR AS SPECIFIED ON THE DRAWINGS.

   B) APPLY FERTILIZER AT A RATE OF 650 LB PER ACRE OR 14.9 LB PER 1,000 SF. APPLY GROUND LIMESTONE (EQUIVALENT TO 50% CALCIUM PLUS MAGNESIUM OXIDE) AT MANUFACTURER'S RECOMMENDED RATE.

   C) THE DESIGN MIX FOR SEEDING SHALL BE IN ACCORDANCE WITH THE FOLLOWING TABLE. THE SEED MIX SHALL BE INOCULATED WITHIN TWENTY-FOUR (24) HOURS, BEFORE MIXING AND PLANTING, WITH APPROPRIATE INOCULUM FOR EACH VARIETY. (ALTERNATIVE SEED MIXES SHALL BE APPROVED BY THE ENGINEER AND CONSERVATION COMMISSION PRIOR TO CONSTRUCTION)

   LOAM AND SEED AREAS – ECO-LAWN MIX

TYPE	% BY WEIGHT
"CINDY LOU" CREEPING RED FESCUE	20
"FENWAY" CREEPING RED FESCUE	15
"JAMESTOWN IV" CHEWINGS FESCUE	15
"BORNITO" HARD FESCUE	15
"CHARIOT" HARD FESCUE	15
"AZURE" SHEEPS FESCUE	10
"BOREAL" CREEPING RED FESCUE	10
APPLICATION RATE	300 LBS./1 ACRE

10. HAY OR STRAW MULCH SHALL BE LOOSELY SPREAD TO A UNIFORM DEPTH AT THE RATE OF 4.5 TONS PER ACRE EXCEPT OVER CERTAIN SELECTED SEEDED AREAS WHERE 2 TONS PER ACRE SHALL BE USED AS DIRECTED BY THE ENGINEER AND/OR THE PLANNING BOARD. A HYDRO-APPLICATION OF WOOD OR PAPER FIBER SHALL BE APPLIED FOLLOWING SEEDING. A SUITABLE BINDER SUCH AS CURASOL OR RMB PLUS WILL BE USED ON HAY MULCH FOR WIND CONTROL.

11. ALL TEMPORARY EROSION CONTROL MEASURES SHALL BE REMOVED ONCE THE SITE IS STABILIZED TO THE SATISFACTION OF THE PROJECT ENGINEER AND/OR THE CONSERVATION COMMISSION.

12. ADJACENT PROPERTIES WILL BE PROTECTED WITH HAY BALES AND/OR SILT FENCING INSTALLED AS SHOWN ON THE DRAWINGS. ADDITIONAL HAY BALES OR SAND BAGS SHALL BE LOCATED AS CONDITIONS WARRANT OR AS DIRECTED BY THE PROJECT ENGINEER AND/OR THE CONSERVATION COMMISSION.

13. TEMPORARY HAY BALE EROSION CHECKS OR FILTER FABRIC GRATE INSERTS SHALL BE PROVIDED AT ALL DRAINAGE STRUCTURE INLETS DURING CONSTRUCTION. UPON COMPLETION OF CONSTRUCTION AND SATISFACTORY STABILIZATION OF DISTURBED AREAS, THE CONTRACTOR SHALL CLEAN ALL CATCH BASIN SUMPS AND DRAIN INVERTS.

14. THE CONTRACTOR MUST REPAIR OR RESEED ANY AREAS THAT DO NOT DEVELOP WITHIN THE PERIOD OF ONE YEAR AND SHALL DO SO AT NO ADDITIONAL EXPENSE TO THE OWNER.

15. THE NORMAL ACCEPTABLE SEASONAL SEEDING DATES ARE APRIL 1ST THROUGH JUNE 15TH AND AUGUST 15TH THROUGH SEPTEMBER 30TH.

16. STOCKPILES OF TOP SOIL SHALL NOT BE LOCATED NEAR WATERWAYS. THEY SHALL HAVE SIDE SLOPES NO GREATER THAN 1:1.

   MULCH AND MULCH ANCHORING

MULCH LOCATION	MULCH	RATE (1,000 S.F.)
MILD SLOPES LESS THAN 3:1	STRAW OR HAY	200 POUNDS
HIGH WIND VELOCITY AREAS	SHREDDED OR CHOPPED CORNSTALKS	200-275 POUNDS
	ANCHORED STRAW OR HAY (1)	200 POUNDS
MODERATE TO HIGH VELOCITY AREAS	JUTE MESH OR EXCELSIOR MAT	AS REQUIRED
STEEP SLOPES GREATER THAN 3:1	JUTE MESH OR EXCELSIOR MAT	AS REQUIRED

   (1) A HYDRO-APPLICATION OF WOOD OR PAPER FIBER MAY BE APPLIED FOLLOWING SEEDING. A SUITABLE BINDER SUCH AS CURASOL OR RMB PLUS SHALL BE USED ON HAY MULCH FOR WIND CONTROL.

   MULCH ANCHORING

   MULCH ANCHORING MAY BE ACCOMPLISHED WITH PEG AND TWINE (1 SQ. YD/BLOCK); MULCH NETTING (PER MANUFACTURERS SPECIFICATIONS); WOOD CELLULOSE FIBER (750 LBS/ACRE); OR CHEMICAL TACK (PER MANUFACTURERS SPECIFICATIONS).

EROSION CONTROL NOTES DURING CONSTRUCTION

1. CONSTRUCTION ACTIVITY EXECUTED DURING THE WINTER CONSTRUCTION PERIOD BETWEEN NOVEMBER 1 THROUGH APRIL 15 SHALL BE SUBJECT TO THE FOLLOWING ADDITIONAL REQUIREMENTS.

2. WINTER EXCAVATION AND EARTHWORK SHALL BE DONE SUCH THAT NO MORE THAN 1 ACRE OF THE SITE IS WITHOUT STABILIZATION AT ANY ONE TIME.

3. EXPOSED AREA SHOULD BE LIMITED TO THAT WHICH CAN BE MULCHED IN ONE DAY PRIOR TO ANY SNOW EVENT.

4. CONTINUATION OF EARTHWORK OPERATIONS ON ADDITIONAL AREAS SHALL NOT BEGIN UNTIL THE EXPOSED SOIL SURFACE ON THE AREA BEING WORKED HAS BEEN STABILIZED SUCH THAT NO AREA IN EXCESS OF ONE ACRE IS WITHOUT EROSION CONTROL PROTECTION.

5. AN AREA SHALL BE CONSIDERED TO HAVE BEEN STABILIZED WHEN EXPOSED SURFACES HAVE BEEN EITHER MULCHED WITH STRAW OR HAY AND ADEQUATELY ANCHORED BY AN APPROVED ANCHORING TECHNIQUE.

6. BETWEEN THE DATES OF OCTOBER 15 AND APRIL 1ST, LOAM OR SEED WILL NOT BE PERMITTED. DURING PERIODS OF ABOVE FREEZING TEMPERATURES, THE SLOPES SHALL BE FINE GRADED AND EITHER PROTECTED WITH MULCH OR TEMPORARILY SEEDED AND MULCHED UNTIL SUCH TIME AS THE FINAL TREATMENT CAN BE APPLIED.

   IF THE DATE IS AFTER NOVEMBER 1ST AND IF THE EXPOSED AREA HAS BEEN LOAMED, FINAL GRADED AND IS SMOOTH, THEN THE AREA MAY BE DORMANT SEEDED AT A RATE OF 200 TO 300% HIGHER THAN SPECIFIED FOR PERMANENT SEED AND THEN MULCHED. IF CONSTRUCTION CONTINUES DURING FREEZING WEATHER, ALL EXPOSED AREAS SHALL BE CONTINUOUSLY GRADED BEFORE FREEZING AND THE SURFACE TEMPORARILY PROTECTED FROM EROSION BY THE APPLICATION OF MULCH. SLOPES SHALL NOT BE LEFT UNEXPOSED OVER THE WINTER OR ANY OTHER EXTENDED TIME OF WORK SUSPENSION UNLESS TREATED IN THE ABOVE MANNER.

   UNTIL SUCH TIME AS WEATHER CONDITIONS ALLOW DITCHES TO BE FINISHED WITH THE PERMANENT SURFACE TREATMENT, EROSION SHALL BE CONTROLLED BY THE INSTALLATION OF HAY BALE/SAND BAG CHECK DAMS.

7. BETWEEN THE DATES OF NOVEMBER 1ST AND APRIL 15TH ALL MULCH SHALL BE ANCHORED BY EITHER PEG LINE, MULCH NETTING, ASPHALT EMULSION CHEMICAL, TRACK OR WOOD CELLULOSE FIBER.

   MULCH NETTING SHALL BE USED TO ANCHOR MULCH IN ALL DRAINAGE WAYS WITH A SLOPE GREATER THAN 3% , FOR SLOPES EXPOSED TO DIRECT WINDS, AND FOR ALL OTHER SLOPES GREATER THAN 8%.

   MULCH NETTING SHALL BE USED TO ANCHOR MULCH IN ALL AREAS WITH SLOPES GREATER THAN 15% AFTER OCTOBER 1ST THE SAME APPLIES FOR ALL SLOPES GREATER THAN 8%.

8. ALL EROSION MITIGATION SHALL BE IN PLACE PRIOR TO ANY SOIL DISTURBANCE ACTIVITIES ON THE SITE.

STORMWATER FACILITY OPERATION/MAINTENANCE PLAN

PROPERTY OWNER:

ROBERT & KAREN KELL
207 PROVIDENCE ROAD
GRAFTON, MASSACHUSETTS 01519-1506

APPLICANT/PROPONENT:

CEC SOLAR #1056 LLC
146 W. BOYLSTON DRIVE
WORCESTER, MASSACHUSETTS 01606

1. THE CONTRACTOR SHALL BE RESPONSIBLE FOR THE PROPER INSPECTION AND MAINTENANCE OF ALL STORMWATER MANAGEMENT FACILITIES INCLUDING THE CONTINUED STABILIZATION OF THE SITE UNTIL SUCH TIME AS THE PROJECT IS ACCEPTED BY THE OWNER. THEREAFTER, THE OWNER SHALL BE RESPONSIBLE FOR THE PROPER INSPECTION AND MAINTENANCE OF ANY STORMWATER FACILITIES IN ACCORDANCE WITH THIS OPERATION AND MAINTENANCE PLAN.

2. ALL STRUCTURAL BEST MANAGEMENT PRACTICES (BMP'S), INCLUDING THE SILTATION CONTROL, SHOULD BE INSPECTED AFTER EVERY MAJOR RAINFALL EVENT EXCEEDING 1.0-INCH UNTIL THE SITE IS FULLY STABILIZED TO ENSURE NO SEDIMENTATION INTO THE WETLANDS HAS OCCURRED.

3. THEREAFTER REGULAR BMP INSPECTIONS SHOULD BE CONDUCTED ACCORDING TO THE FOLLOWING SCHEDULE:

BMP STRUCTURE	INSPECTIONS PER YEAR
CRUSHED STONE EDGE DRAIN TRENCHES	2
DETENTION BASINS	2

4. ACCUMULATED SILT AND SEDIMENT AHEAD OF THE SILTATION CONTROLS SHOULD BE REMOVED IF THE ACCUMULATED DEPTH OF SEDIMENT EXCEEDS ONE HALF OF THE HEIGHT OF THE STRUCTURE. ANY ACCUMULATED SILT WITHIN THE DETENTION BASINS SHOULD BE REMOVED ONCE THE ACCUMULATED DEPTH OF SILT EXCEEDS THREE INCHES.

5. ALL REMOVED SEDIMENTS ARE TO BE PROPERLY DISPOSED OF AT A LOCATION TO BE APPROVED BY THE BOARD OF HEALTH, TRANSPORTATION AND DISPOSAL OF SEDIMENTS SHALL COMPLY WITH ALL APPLICABLE LOCAL, STATE, AND FEDERAL REGULATIONS.

6. THE ACCESS DRIVEWAY INTO THE FACILITY SHALL BE PLOWED AFTER ALL SNOW EVENTS TO MAINTAIN EMERGENCY ACCESS TO THE FACILITY. SNOW SHALL BE STOCKPILED WITHIN THE FENCED AREA AND ALLOW TO MELT ON-SITE AND FLOW OVERLAND FOLLOWING NATURAL DRAINAGE PATTERNS.

7. THE ACCESS DRIVEWAY SHALL BE MONITORED ON A REGULAR BASIS TO INSURE ITS SUITABILITY FOR ACCESS. GRAVEL ALONG THE ACCESS DRIVEWAY SHALL BE REPLACED AS NECESSARY TO MAINTAIN SUITABLE ACCESS TO THE ARRAY. IN ADDITION THE ENTIRE FACILITY SHALL BE MONITORED ON A REGULAR BASIS FOR ANY SIGNS OF EROSION DUE TO STORMWATER RUNOFF. ERODED AREAS SHALL BE STABILIZED AS SOON AS POSSIBLE.

8. THE SITE SHALL BE MONITORED TO INSURE PROPOSED DRAINAGE PATTERNS ARE MAINTAINED FOLLOWING CONSTRUCTION. SHOULD CHANNEL FLOW FROM RUNOFF DEVELOP WITHIN THE SITE THAT REQUIRES CORRECTIVE MEASURES, THESE MEASURES SHALL BE REVIEWED WITH THE PLANNING BOARD PRIOR TO THEIR IMPLEMENTATION.

9. SIDE SLOPES AND BOTTOM AREAS OF ANY GRASSED SWALES AND DETENTION BASINS SHOULD BE MOWED TO A MINIMUM HEIGHT OF FOUR INCHES AT LEAST ONCE A YEAR. REMOVE ALL GRASS CLIPPINGS AND ORGANIC MATTER FROM ALL DRAINAGE WAYS AS NECESSARY.

10. THE DETENTION BASINS SHOULD BE INSPECTED FOR TRASH ON A REGULAR BASIS. ANY ACCUMULATED TRASH, LITTER, AND DISCARDED MATERIALS SHOULD BE REMOVED.

11. THE CONTRACTOR AND THE OWNER SHALL MAINTAIN A BMP INSPECTION REPORT FOLLOWING EACH SITE INSPECTION AS RECOMMENDED ABOVE. THE BMP INSPECTION REPORT SHALL IDENTIFY THE DATE OF INSPECTION, THE NAME AND CONTACT NUMBER OF THE RESPONSIBLE PARTY, SPECIFIC STRUCTURES INSPECTED, SPECIFIC MAINTENANCE REQUIRED AND OBSERVATIONS AT A MINIMUM, INSPECTION REPORTS SHOULD ADDRESS THE FOLLOWING CONDITIONS WHERE APPLICABLE:

   1. EMBANKMENT SUBSIDENCE
   2. EROSION
   3. CRACKING OF CONTAINMENT BERM
   4. INLET/OUTLET CONDITIONS
   5. SEDIMENT ACCUMULATIONS
   6. SLOPE STABILITY

LEGEND

EXISTING		PROPOSED	
100	EXISTING INDEX CONTOUR	100	PROPOSED INDEX CONTOUR
98	EXISTING INTERMEDIATE CONTOUR	98	PROPOSED INTERMEDIATE CONTOUR
× 98.5	EXISTING SPOT GRADE	98.8	PROPOSED SPOT GRADE
	EXISTING PROPERTY LINE		PROPOSED PROPERTY LINE
	EXISTING ABUTTER PROPERTY LINE		
	EXISTING MONUMENT		PROPOSED MONUMENT
	EXISTING BUILDING		PROPOSED BUILDING
	EXISTING EDGE OF PAVEMENT		PROPOSED EDGE OF PAVEMENT
CURB TYPE	EXISTING CURB	CURB TYPE	PROPOSED CURB
SIDEWALK TYPE	EXISTING SIDEWALK	SIDEWALK TYPE	PROPOSED SIDEWALK
	EXISTING EDGE OF DRIVES		PROPOSED EDGE GRAVEL DRIVES
	EXISTING WOOD ROAD		
	EXISTING TREELINE		PROPOSED LIMIT OF CLEARING
×	EXISTING FENCE LINE	×	PROPOSED FENCE LINE
	EXISTING GUARDRAIL		PROPOSED GUARDRAIL
	EXISTING STONEWALL	WALL TYPE	PROPOSED WALL
	EXISTING RETAINING WALL		PROPOSED RETAINING WALL
	EXISTING RAILROAD		PROPOSED RAILROAD
	EXISTING SETBACK LINE		PROPOSED SETBACK LINE
	EXISTING EASEMENT LINE		PROPOSED EASEMENT LINE
	EXISTING ZONING BOUNDARY		PROPOSED ZONING BOUNDARY
	EXISTING RIP RAP		PROPOSED RIP RAP
	EXISTING SOIL BORING LOCATION		
TP	EXISTING TEST PIT LOCATION	TP	PROPOSED TEST PIT LOCATION
	EXISTING SIGN POST		PROPOSED SIGN POST
	EXISTING LIGHT POLE		PROPOSED LIGHT POLE
	EXISTING UTILITY POLE		PROPOSED UTILITY POLE
	EXISTING GUY POLE		PROPOSED GUY POLE
CB	EXISTING CATCH BASIN	CB	PROPOSED CATCH BASIN
DMH	EXISTING DRAIN MANHOLE	DMH	PROPOSED DRAIN MANHOLE
	EXISTING FLARED END		PROPOSED FLARED END
SMH	EXISTING SEWER MANHOLE	SMH	PROPOSED SEWER MANHOLE
WMH	EXISTING WATER MANHOLE	WMH	PROPOSED WATER MANHOLE
	EXISTING HYDRANT		PROPOSED HYDRANT
WV	EXISTING WATER GATE VALVE		PROPOSED WATER GATE VALVE
CS	EXISTING CURB STOP	CS	PROPOSED CURB STOP
	EXISTING WELL LOCATION		PROPOSED WELL LOCATION
EMH	EXISTING ELECTRIC MANHOLE	EMH	PROPOSED ELECTRIC MANHOLE
HH	EXISTING HAND HOLE	HH	PROPOSED HAND HOLE
T	EXISTING TRANSFORMER PAD	T	PROPOSED TRANSFORMER PAD
	EXISTING TELEPHONE MANHOLE		PROPOSED TELEPHONE MANHOLE
	EXISTING CONTROLLER CABINET		PROPOSED CONTROLLER CABINET
GG	EXISTING GAS GATE	GG	PROPOSED GAS GATE
SIZE & TYPE	EXISTING DRAIN LINE	SIZE & TYPE	PROPOSED DRAIN LINE
SIZE & TYPE	EXISTING SEWER LINE	SIZE & TYPE	PROPOSED SEWER LINE
SIZE & TYPE	EXISTING WATER LINE	SIZE & TYPE	PROPOSED WATER LINE
SIZE & TYPE	EXISTING GAS LINE	SIZE & TYPE	PROPOSED GAS LINE
CONDUIT SIZE	EXISTING ELECTRIC LINE	CONDUIT SIZE	PROPOSED ELECTRIC LINE
TYPE	EXISTING CABLE T.V. & TELEPHONE	TYPE	PROPOSED CABLE T.V. & TELEPHONE
	EXISTING SEPTIC SYSTEM LOCATION		PROPOSED SEPTIC SYSTEM LOCATION
	EXISTING WETLAND LINE		PROPOSED WETLAND REPLICATION AREA
F1	EXISTING WETLAND FLAG LOCATION		PROPOSED SILTATION CONTROL
	EXISTING BUFFER LINE	LOC	PROPOSED LIMIT OF CLEARING
	EXISTING RIVERFRONT LINE	(DEM)	EXISTING STRUCTURE TO BE DEMOLISHED
	EXISTING FLOOD ZONE LINE	(R&D)	REMOVE & DISPOSE
	EXISTING WATER BODY	(R&R)	REMOVE & RESET
	EXISTING EDGE OF LEDGE	(AG)	ADJUST TO GRADE
		(AB)	ABANDON
		(AIP)	ABANDON IN PLACE

FIELD ENGINEERING CO., INC.
CONSULTING ENGINEERS

11D INDUSTRIAL DRIVE
P.O. BOX 1178
MATTAPOISETT, MA 02739
TEL: (508) 758-2749
FAX: (508) 758-2849

THE CROCKER BUILDING
4 COURT STREET SUITE 104
TAUNTON, MA 02780
TEL: (508) 824-9279
FAX: (508) 824-9276

Revisions			
No.	Description	Date	Appvd.

Date 8/12/15

Scale NO SCALE

Drawn By	Designed By	Checked By
RMS	RRR	RRR

Issued For PERMITTING

COMMONWEALTH OF MASSACHUSETTS
RICHARD R. RICCIO III
CIVIL
No. 45898
PROFESSIONAL ENGINEER
8/12/15

PROPOSED SITE DEVELOPMENT
CEC SOLAR #1056 LLC

207 PROVIDENCE ROAD
GRAFTON, MASSACHUSETTS

Drawing Title
NOTES & LEGEND

Project No.	Sheet
2035	2 of 12

N-1

2035_Notes-Details

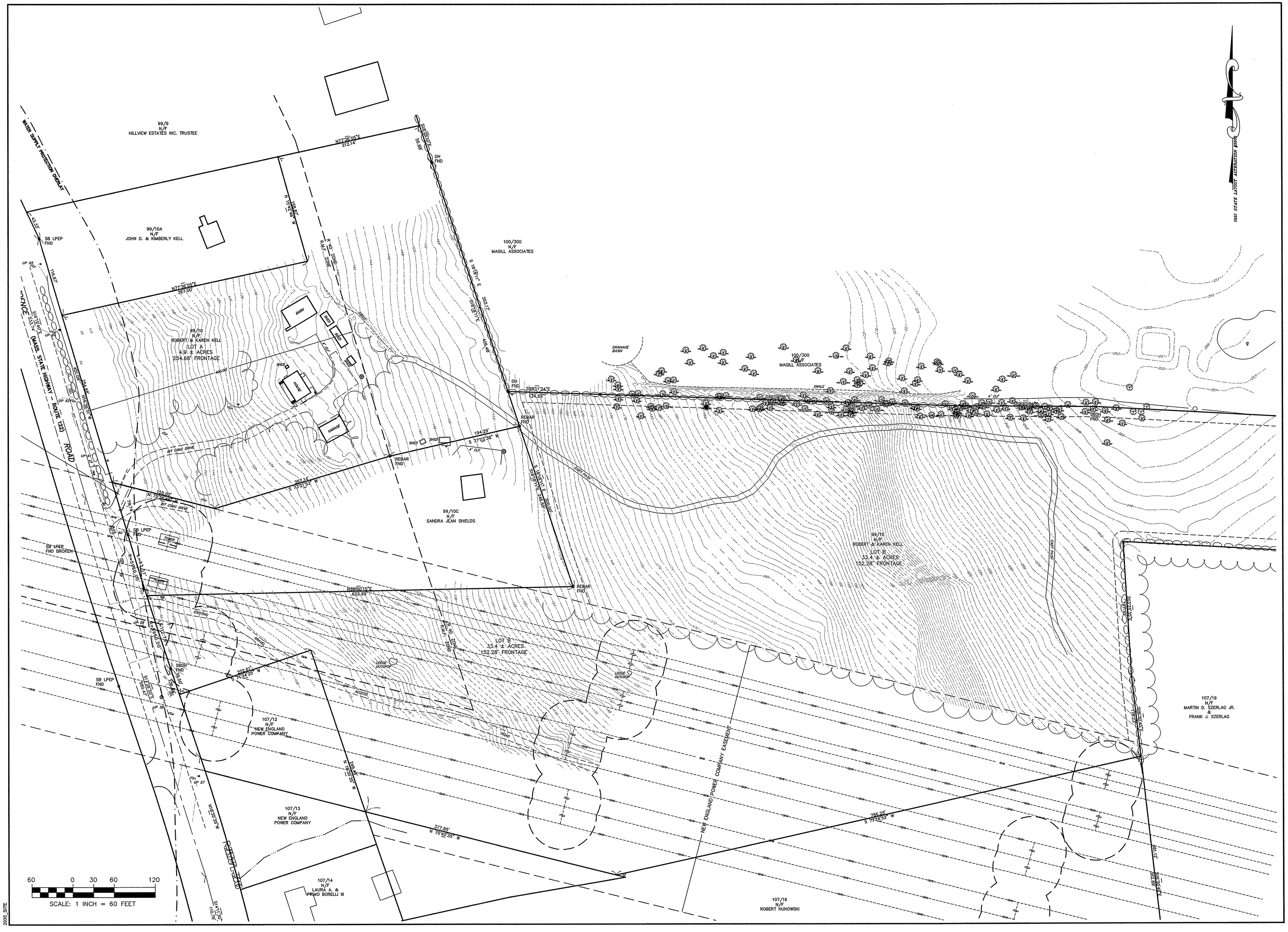

FIELD ENGINEERING CO., INC.
CONSULTING ENGINEERS

11D INDUSTRIAL DRIVE
P.O. BOX 1178
MATTAPOISETT, MA 02739
TEL: (508) 758-2749
FAX: (508) 758-2849

THE CROCKER BUILDING
4 COURT STREET SUITE 104
TAUNTON, MA 02780
TEL: (508) 824-9278
FAX: (508) 824-9276

Revisions

No.	Description	Date	Appvd.

Date: 8/12/15

Scale: 1"=60'

Drawn By	Designed By	Checked By
RMS	RRR	RRR

Issued For: PERMITTING

COMMONWEALTH OF MASSACHUSETTS
RICHARD R. RICCIO III
CIVIL
No. 45988
PROFESSIONAL ENGINEER
8/12/15

PROPOSED SITE DEVELOPMENT
CEC SOLAR #1056 LLC

207 PROVIDENCE ROAD
GRAFTON, MASSACHUSETTS

Drawing Title: EXISTING CONDITIONS

Project No.	Sheet
2035	3 OF 12

EC-1

2035_SITE

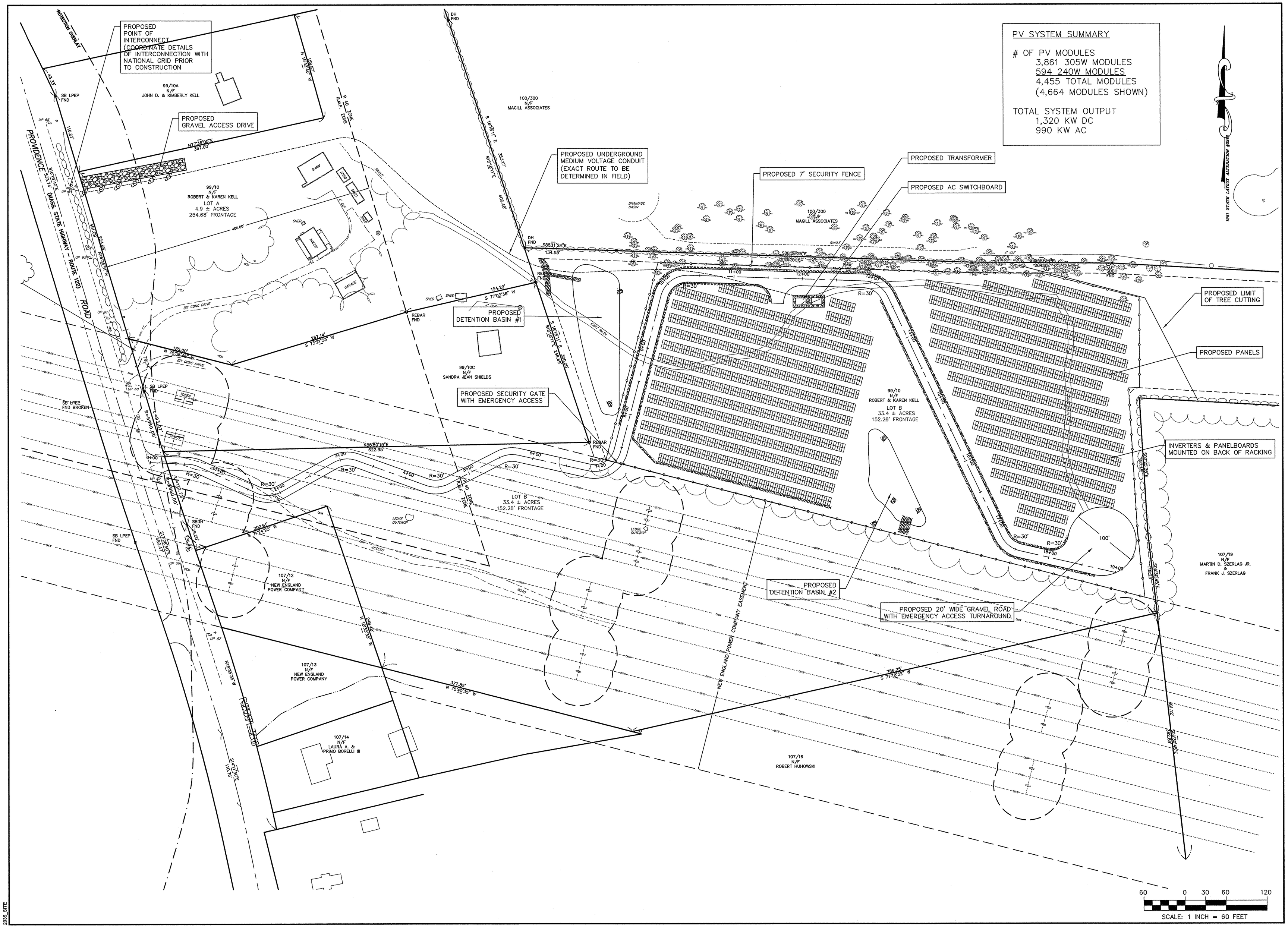

PV SYSTEM SUMMARY

OF PV MODULES
3,861 305W MODULES
594 240W MODULES
4,455 TOTAL MODULES
(4,664 MODULES SHOWN)

TOTAL SYSTEM OUTPUT
1,320 KW DC
990 KW AC

FIELD ENGINEERING CO., INC.
CONSULTING ENGINEERS

11D INDUSTRIAL DRIVE
P.O. BOX 1178
MATTAPOISETT, MA 02739
TEL: (508) 758-2749
FAX: (508) 758-2849

THE CROCKER BUILDING
4 COURT STREET SUITE 104
TAUNTON, MA 02780
TEL: (508) 824-9279
FAX: (508) 824-9276

Revisions

No.	Description	Date	Appvd.

Date: 8/12/15

Scale: 1"=60'

Drawn By	Designed By	Checked By
RMS	RRR	RRR

Issued For: PERMITTING

COMMONWEALTH OF MASSACHUSETTS
RICHARD R. RICCIO III
CIVIL
No. 45898
REGISTERED PROFESSIONAL ENGINEER
8/12/15

PROPOSED SITE DEVELOPMENT
CEC SOLAR #1056 LLC
207 PROVIDENCE ROAD
GRAFTON, MASSACHUSETTS

Drawing Title: SITE LAYOUT

Project No.	Sheet
2035	4 OF 12

SL-1

2035_SITE

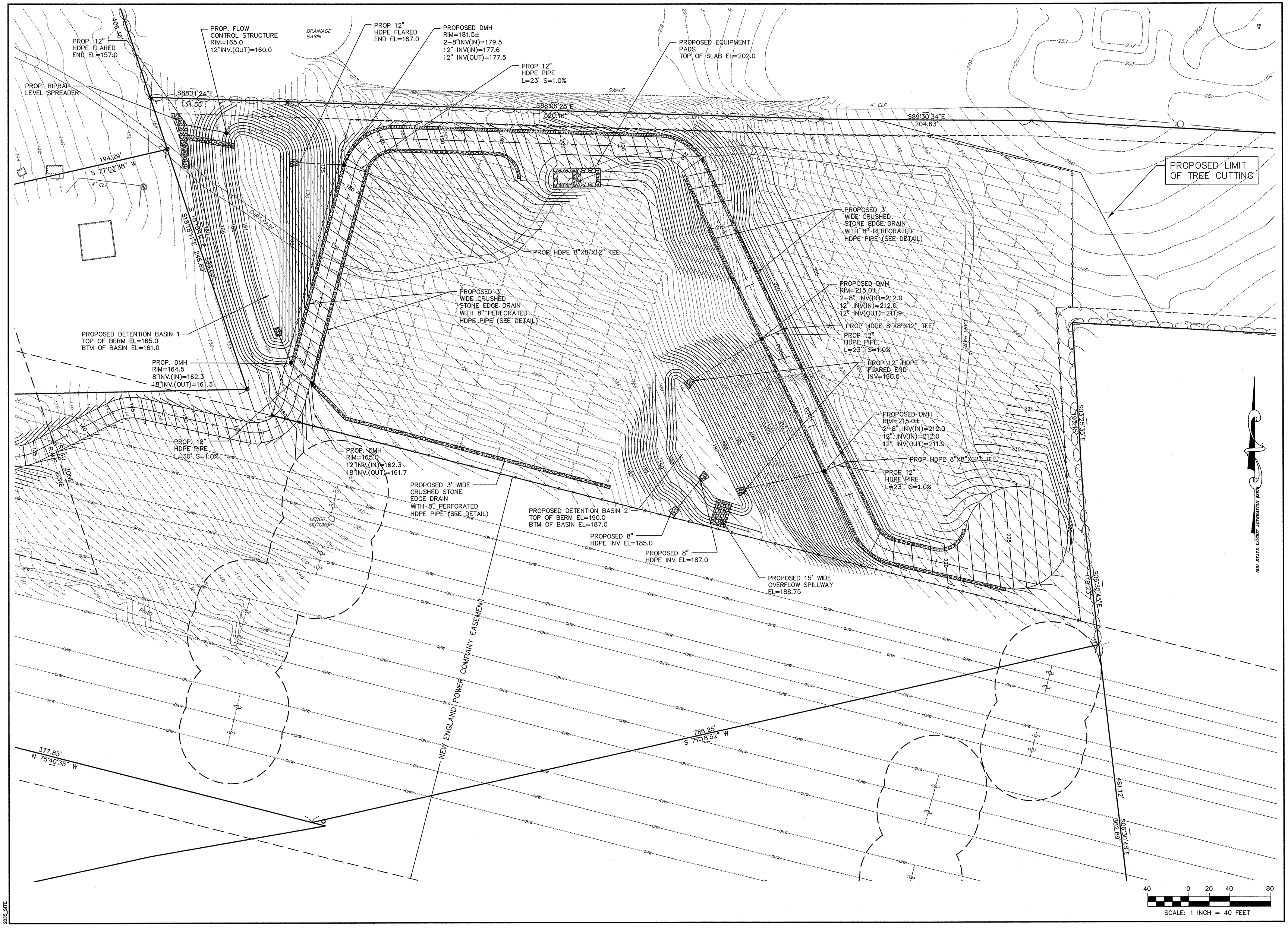

FIELD ENGINEERING CO., INC.
CONSULTING ENGINEERS

11D INDUSTRIAL DRIVE
P.O. BOX 1178
MATTAPOISETT, MA 02739
TEL: (508) 758-2749
FAX: (508) 758-2849

THE CROCKER BUILDING
4 COURT STREET SUITE 104
TAUNTON, MA 02780
TEL: (508) 824-9279
FAX: (508) 824-9276

Revisions

No.	Description	Date	Appvd.

Date: 8/12/15

Scale: 1"=40'

Drawn By	Designed By	Checked By
RMS	RRR	RRR

Issued For: PERMITTING

COMMONWEALTH OF MASSACHUSETTS
RICHARD R. RICCIO III
CIVIL
No. 45898
REGISTERED PROFESSIONAL ENGINEER
8/12/15

PROPOSED SITE DEVELOPMENT
CEC SOLAR #1056 LLC

207 PROVIDENCE ROAD
GRAFTON, MASSACHUSETTS

Drawing Title: SOLAR ARRAY GRADING & DRAINAGE

Project No.	Sheet
2035	5 OF 12

SGD-1

2035_SITE

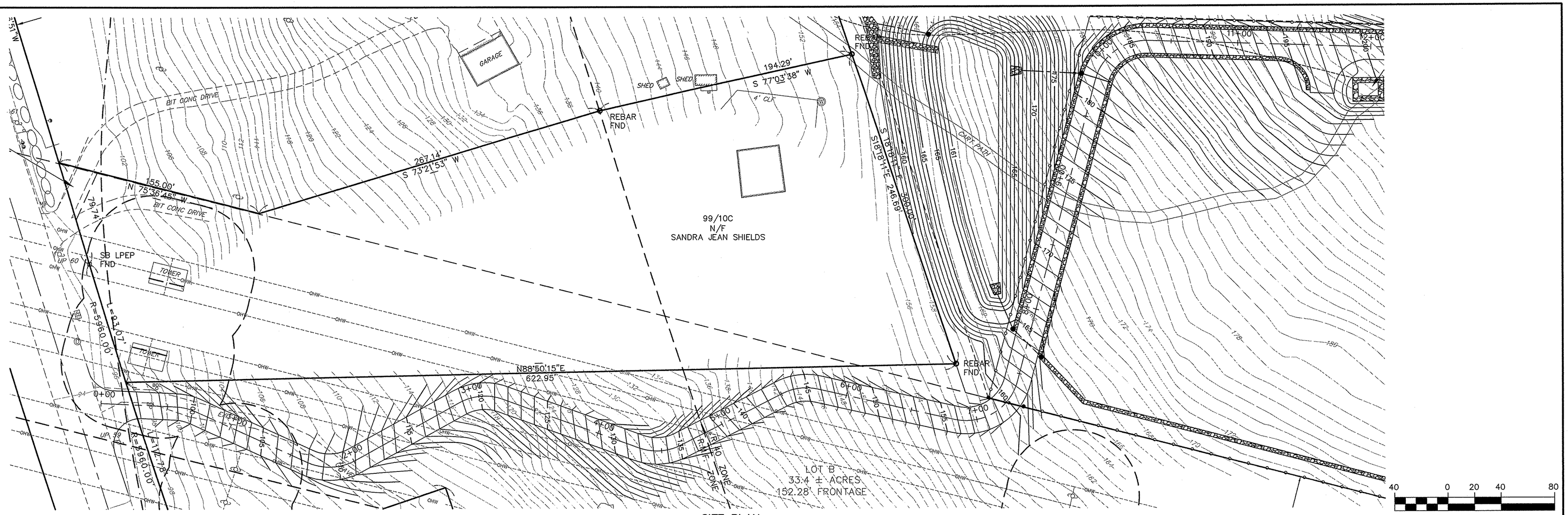

SITE PLAN

SCALE: 1"=40'

40 0 20 40 80

SCALE: 1 INCH = 40 FEET

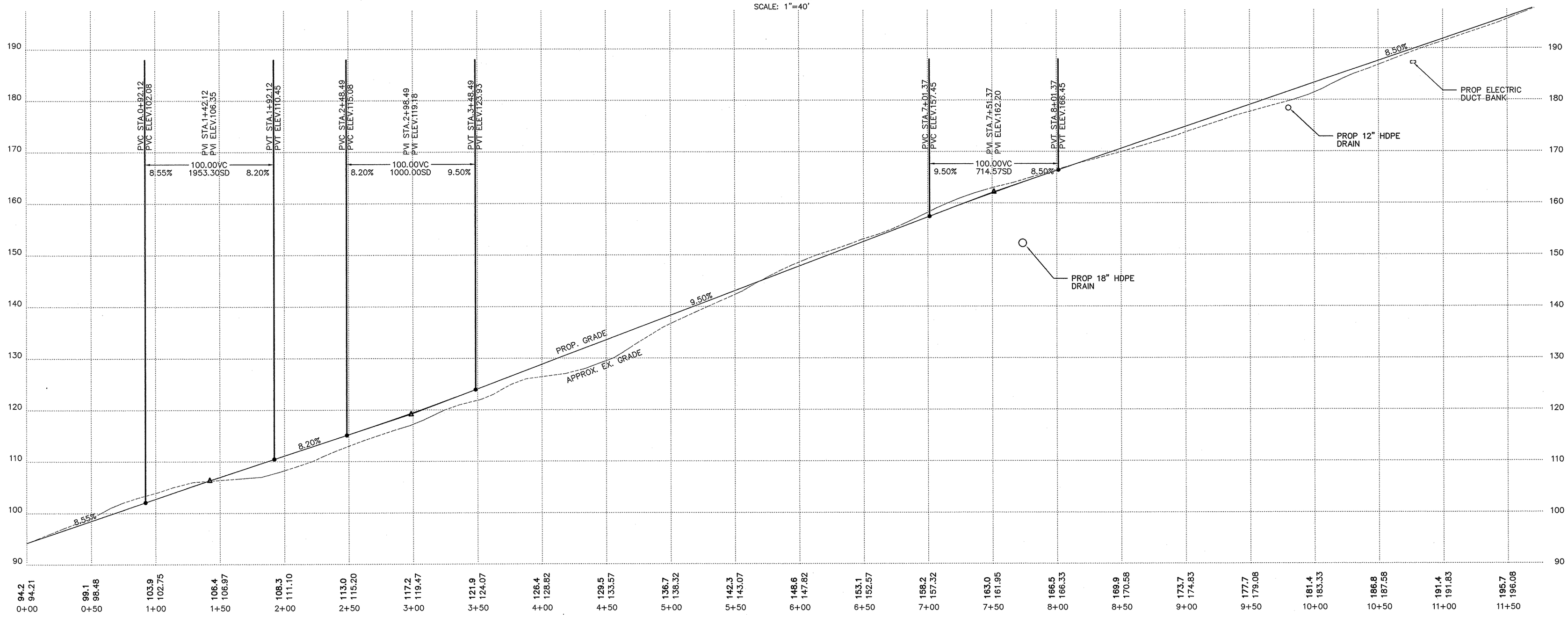

ACCESS ROAD PROFILE

SCALE: 1"=40' HORIZ.
1"=10' VERT.

FIELD ENGINEERING CO., INC.
CONSULTING ENGINEERS

11D INDUSTRIAL DRIVE
P.O. BOX 1176
MATTAPOISETT, MA 02739
TEL: (508) 758-2749
FAX: (508) 758-2849

THE CROCKER BUILDING
4 COURT STREET SUITE 104
TAUNTON, MA 02780
TEL: (508) 824-9279
FAX: (508) 824-9276

Revisions

No.	Description	Date	Apprvd.

Date 8/12/15

Scale 1"=40'

Drawn By	Designed By	Checked By
RMS	RRR	RRR

Issued For

PERMITTING

COMMONWEALTH OF MASSACHUSETTS
RICHARD R. RICCIO III
CIVIL
No. 45898
REGISTERED PROFESSIONAL ENGINEER
8/12/15

PROPOSED SITE DEVELOPMENT
CEC SOLAR #1056 LLC

207 PROVIDENCE ROAD
GRAFTON, MASSACHUSETTS

Drawing Title

ACCESS ROAD PLAN & PROFILE

Project No.	Sheet
2035	6 OF 12

PP-1

2035_SITE

SITE PLAN
SCALE: 1"=40'

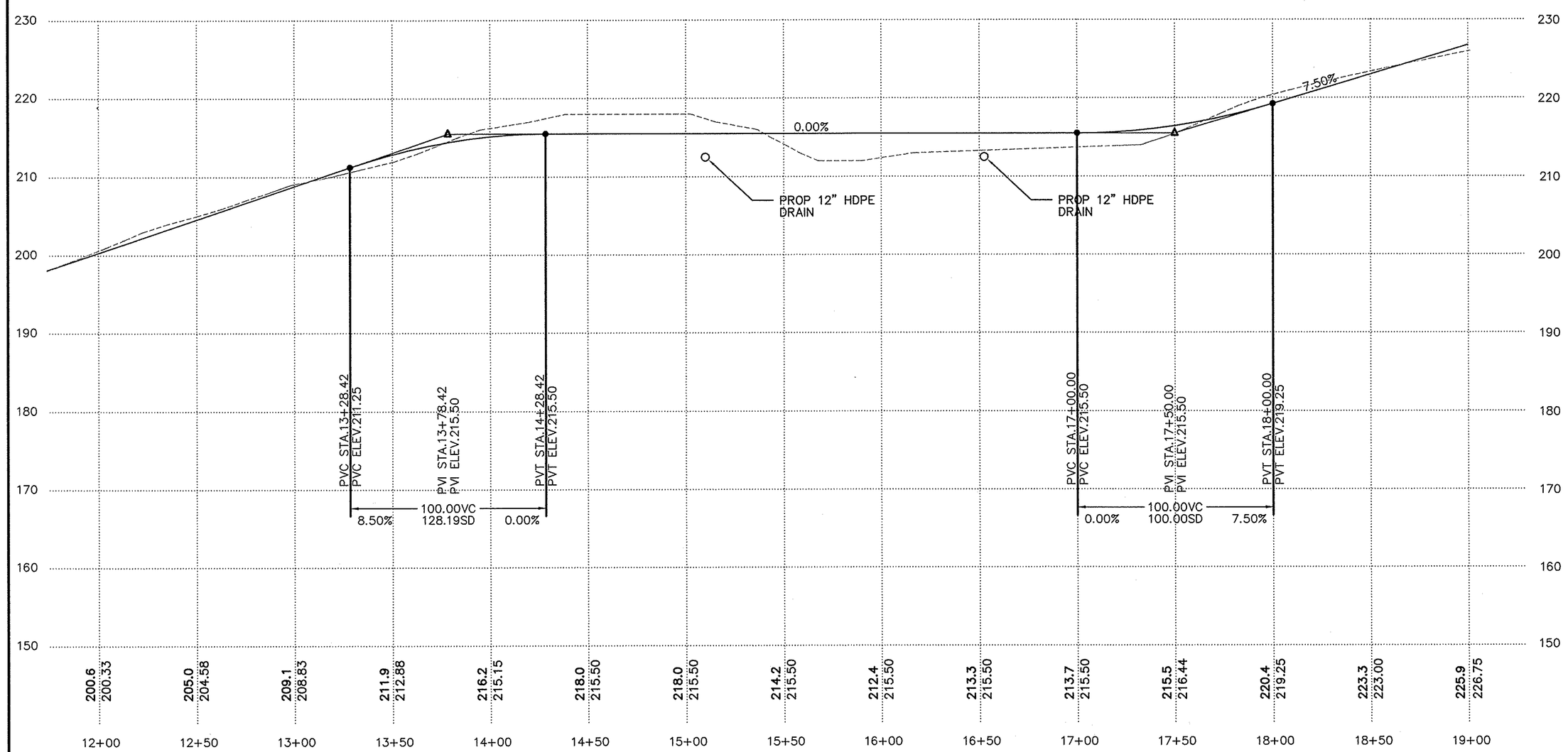

ACCESS ROAD PROFILE
SCALE: 1"=40' HORIZ.
1"=10' VERT.

40 0 20 40 80
SCALE: 1 INCH = 40 FEET

FIELD ENGINEERING CO., INC.
CONSULTING ENGINEERS

11D INDUSTRIAL DRIVE
P.O. BOX 1178
MATTAPOISETT, MA 02739
TEL: (508) 758-2749
FAX: (508) 758-2849

THE CROCKER BUILDING
4 COURT STREET SUITE 104
TAUNTON, MA 02780
TEL: (508) 824-9279
FAX: (508) 824-9276

Revisions

No.	Description	Date	Appvd.

Date 8/12/15

Scale 1"=40'

Drawn By	Designed By	Checked By
RMS	RRR	RRR

Issued For
PERMITTING

COMMONWEALTH OF MASSACHUSETTS
RICHARD R. RICCIO III
CIVIL
No. 45398
Registered Professional Engineer
8/12/15

PROPOSED SITE DEVELOPMENT
CEC SOLAR #1056 LLC

207 PROVIDENCE ROAD
GRAFTON, MASSACHUSETTS

Drawing Title
ACCESS ROAD PLAN & PROFILE

Project No.	Sheet
2035	7 OF 12

PP-2

2035_SITE

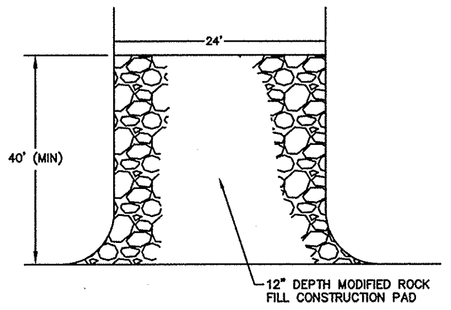

TEMPORARY CONSTRUCTION PAD
NOT TO SCALE

NOTE: TEMPORARY CONSTRUCTION PADS TO BE PLACED AT ALL CONSTRUCTION ENTRANCES TO MINIMIZE TRACKING ONTO THE ROADWAY SURFACE.

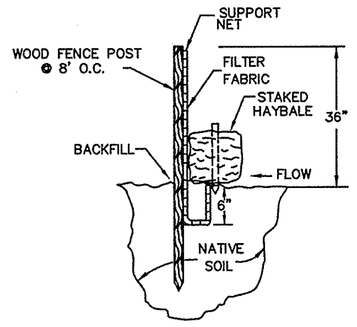

TYPICAL HAY BALE/ SILT FENCE DETAIL
NOT TO SCALE

DEWATERING SPECIFICATIONS

1. DEWATERING BASINS SHALL BE CONSTRUCTED BEFORE ANY DEWATERING OPERATION COMMENCE. DISCHARGE FROM THE DEWATERING BASINS SHALL BE DIRECTED TO THE NEAREST WETLAND DISCHARGE AREA.

2. HAY BALES/SILT DEWATERING BASINS SHALL BE CONSTRUCTED BEFORE DEWATERING BEGINS.

3. ALL SEDIMENT SHALL BE REMOVED AND FINISHED GRADES RESTORED UPON COMPLETION OF DEWATERING OPERATIONS.

4. THE LOCATION OF ANY DEWATERING BASIN SHALL BE REVIEWED WITH THE PROJECT ENGINEER AND CONSERVATION COMMISSION AGENT PRIOR TO THEIR IMPLEMENTATION.

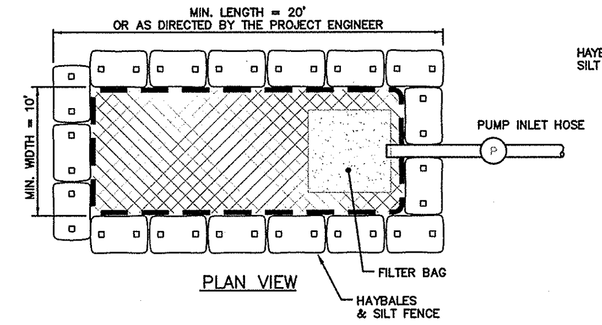

PLAN VIEW

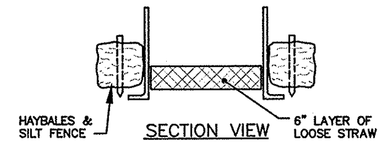

SECTION VIEW

DEWATERING BASIN
NOT TO SCALE

PHASING NOTES

1. INSTALL PROPOSED SILTATION CONTROL MEASURES AS SHOWN ON THESE PLANS. (REFER TO EROSION AND SEDIMENTATION CONTROL PROGRAM ON SHEET N-1 FOR ADDITIONAL INFORMATION ON SILTATION CONTROL PRACTICES TO BE USED THROUGHOUT THE SITE)

2. NOTIFY CONSERVATION COMMISSION AGENT FOLLOWING INSTALLATION OF SILTATION CONTROL, PRIOR TO ANY MAJOR EXCAVATION TAKING PLACE.

3. CONSTRUCT TEMPORARY DIVERSION SWALES WITH HAY BALE CHECK DAMS AS NECESSARY, PROPOSED DETENTION AREAS TO BE USED AS SEDIMENT BASINS DURING CONSTRUCTION.

4. CONSTRUCT CRUSHED STONE TRACKING PADS.

5. CLEAR AND GRUB SITE.

6. PERFORM NECESSARY SITE GRADING, CONSTRUCT GRAVEL ACCESS ROADS. LOAM, COMPACT AND ROLL SITE FOR TEMPORARY STABILIZATION.

7. INSTALL SOLAR ARRAY FOUNDATIONS, CONCRETE PADS, AND SOLAR PANELS.

8. FINE GRADE, LOAM DISTURBED AREAS AS NECESSARY AND SEED SITE FOLLOWING INSTALLATION OF PANELS.

9. CONNECT DESIGNED DRAINAGE STRUCTURES AND FILL TEMPORARY SWALES AND SEDIMENT BASINS WHERE APPLICABLE.

10. REMOVE ANY SEDIMENT FROM DETENTION AREAS USED AS TEMPORARY SEDIMENT BASINS PRIOR TO FINAL LOAMING AND SEEDING OF THESE AREAS.

11. REMOVE SILTATION CONTROLS UPON FULL STABILIZATION OF FINISHED SURFACES.

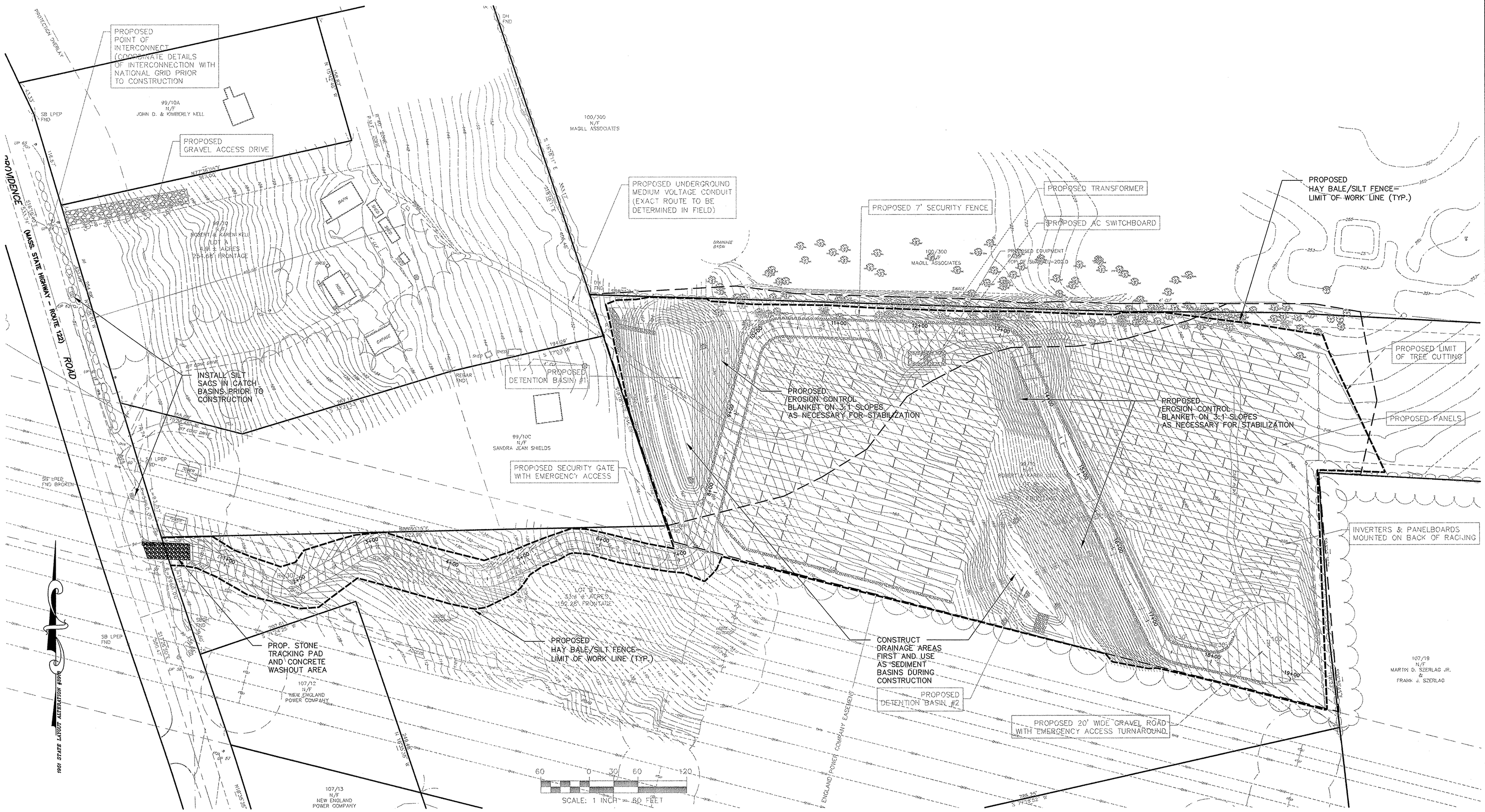

FIELD ENGINEERING CO., INC.
CONSULTING ENGINEERS

11D INDUSTRIAL DRIVE
P.O. BOX 1178
MATTAPOISETT, MA 02739
TEL: (508) 758-2749
FAX: (508) 758-2849

THE CROCKER BUILDING
4 COURT STREET SUITE 104
TAUNTON, MA 02780
TEL: (508) 824-9279
FAX: (508) 824-9276

Revisions

No.	Description	Date	Appvd.

Date 8/12/15

Scale 1"=60'

Drawn By	Designed By	Checked By
RMS	RRR	RRR

Issued For

PERMITTING

PROPOSED SITE DEVELOPMENT
CEC SOLAR #1056 LLC

207 PROVIDENCE ROAD
GRAFTON, MASSACHUSETTS

Drawing Title

EROSION CONTROL

Project No.	Sheet
2035	8 OF 12

EROS-1

2035_SITE

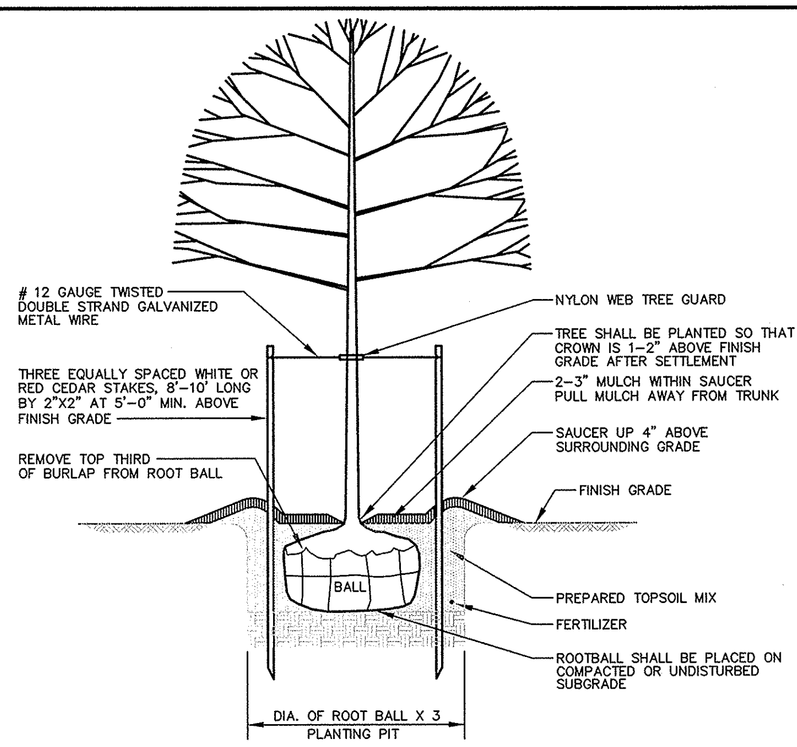

1.) PREPARED TOPSOIL MIX SHALL CONSIST OF HIGH ORGANIC SOIL WITH NO LESS THAN 10% ORGANIC MATTER.

2.) ALL PLANTS SHALL BE FLODDED WITH WATER TWICE WITHIN THE FIRST TWENTY-FOUR HOUR PERIOD AFTER PLANTING.

TREE PLANTING DETAIL

NOT TO SCALE

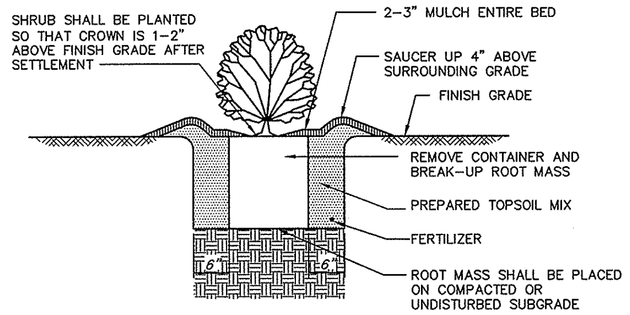

1.) PREPARED TOPSOIL MIX SHALL CONSIST OF HIGH ORGANIC SOIL WITH NO LESS THAN 10% ORGANIC MATTER.

2.) ALL PLANTS SHALL BE FLODDED WITH WATER TWICE WITHIN THE FIRST TWENTY-FOUR HOUR PERIOD AFTER PLANTING.

SHRUB PLANTING DETAIL

NOT TO SCALE

PLANTING NOTES

1. PLANT MATERIAL SHALL BE FURNISHED AND INSTALLED AS INDICATED; INCLUDING ALL LABOR, MATERIALS, PLANTS, EQUIPMENT, INCIDENTALS, AND CLEAN-UP.
2. PLANTS SHALL BE TYPICAL OF THEIR SPECIES AND VARIETY; HAVE NORMAL GROWTH HABITS; WELL DEVELOPED BRANCHES, DENSELY FOLIATED, VIGOROUS ROOT SYSTEMS AND BE FREE FROM DEFECTS AND INJURIES.
3. ALL PLANT MATERIAL SHALL BE GUARANTEED BY THE CONTRACTOR TO BE IN VIGOROUS GROWING CONDITION. PROVISIONS SHALL BE MADE FOR A GROWTH GUARANTEE OF AT LEAST ONE YEAR FROM THE DATE OF ACCEPTANCE FOR TREES AND SHRUBS. REPLACEMENTS SHALL BE MADE AT THE BEGINNING OF THE FIRST SUCCEEDING PLANTING SEASON. ALL REPLACEMENTS SHALL HAVE A GUARANTEE EQUAL TO THAT STATED ABOVE.
4. INSOFAR AS IT IS PRACTICABLE, PLANT MATERIAL SHALL BE PLANTED ON THE DAY OF DELIVERY. IN THE EVENT THIS IS NOT POSSIBLE, THE CONTRACTOR SHALL PROTECT STOCK NOT PLANTED. PLANTS SHALL NOT REMAIN UNPLANTED FOR LONGER THAN A THREE DAY PERIOD AFTER DELIVERY. ANY PLANTS NOT INSTALLED DURING THIS PERIOD WILL BE REJECTED.
5. QUALITY AND SIZE OF PLANTS, SPREAD OF ROOTS, AND SIZE OF BALLS SHALL BE IN ACCORDANCE WITH ANSI 260 (REV. 1980) "AMERICAN STANDARD FOR NURSERY STOCK" AS PUBLISHED BY THE AMERICAN ASSOCIATION OF NURSERYMEN, INC.
6. ALL PLANTS SHALL BE PLANTED IN TRANSPORTED TOP SOIL THAT IS THOROUGHLY WATERED AND TAMPED AS BACK FILLING PROGRESSES. PLANTING MIX TO BE AS SHOWN ON PLANTING DETAILS. RAISE AND REPLANT ANY PLANT WHICH SETTLES MORE THAN 2" AFTER PLANTING AND WATERING.
7. FERTILIZER FOR WOODY PLANTS SHALL BE SLOW RELEASE, PELLITIZED AND SUITABLE FOR RELEASE UNDER SATURATED SOIL CONDITIONS. FERTILIZER SHALL BE OSMOCOTE 18-5-11, 12-14 MONTH RELEASE OR EQUAL.
8. PLANTS SHALL NOT BE BOUND WITH WIRE OR ROPE AT ANY TIME SO AS TO DAMAGE THE BARK OR BREAK BRANCHES. PLANTS SHALL BE HANDLED FROM THE BOTTOM OF THE BALL ONLY.
9. PLANTING OPERATIONS SHALL BE PERFORMED DURING PERIODS WITHIN THE PLANTING SEASON WHEN WEATHER AND SOIL CONDITIONS ARE SUITABLE AND IN ACCORDANCE WITH ACCEPTED PRACTICE. PLANTS SHALL NOT BE INSTALLED IN TOPSOIL THAT IS IN A MUDDY OR FROZEN CONDITION. ALL PLANT MATERIAL SHALL BE SPRAYED WITH "WILT-PRUF" OR EQUAL AS PER MANUFACTURER'S INSTRUCTIONS.
10. NO PLANT, EXCEPT GROUND COVERS, SHALL BE PLANTED LESS THAN TWO FEET FROM EXISTING STRUCTURES AND SIDEWALKS.
11. SET ALL PLANTS PLUMB AND STRAIGHT. LOCATE PLANT IN THE CENTER OF THE PIT.
12. ALL DEADWOOD, SUCKERS, AND BROKEN OR BADLY BRUISED BRANCHES SHALL BE REMOVED. CONTAINER GROWN PLANTS SHALL NOT BE THINNED.
13. TREES SHALL BE SUPPORTED IMMEDIATELY AFTER PLANTING. TREES SHALL BE STAKED AS SHOWN ON THE DETAIL. THE LANDSCAPE CONTRACTOR SHALL REMOVE STAKING AND GUYING AT THE END OF THE ONE YEAR MAINTENANCE AND GUARANTEE PERIOD.
14. NEW PLANTING AREAS SHALL BE ADEQUATELY IRRIGATED OR WATERED TO ESTABLISH THE PROPOSED PLANTS AND SEED AREAS.
15. PRIOR TO THE ACCEPTANCE BY THE OWNER, THE PROPOSED LANDSCAPE AS SHOWN ON THE APPROVED LANDSCAPE PLAN MUST BE INSTALLED, INSPECTED AND APPROVED BY THE OWNERS REPRESENTATIVE. ANY PLANTING INSTALLED IN CONFLICT WITH THESE REQUIREMENTS MUST RECEIVE THE WRITTEN APPROVAL OF THE PRIOR TO PLANTING. FAILURE TO COMPLY WITH THESE REQUIREMENTS WILL REQUIRE THE REMOVAL OF THE PLANTING IN QUESTION. THIS REQUIREMENT DOES NOT APPLY TO SEEDING OR SODDING OR PLANTINGS SPECIFICALLY FOR SOIL STABILIZATION.
16. THE CONTRACTOR SHALL SUBMIT A MATERIALS LIST INCLUDING THE SPECIES, SIZE, AND NUMBER OF PLANTS TO THE OWNER FOR APPROVAL PRIOR TO ORDERING OF MATERIALS. EXACT LOCATIONS OF ALL PLANTINGS SHALL BE COORDINATED WITH THE OWNER PRIOR TO INSTALLATION.

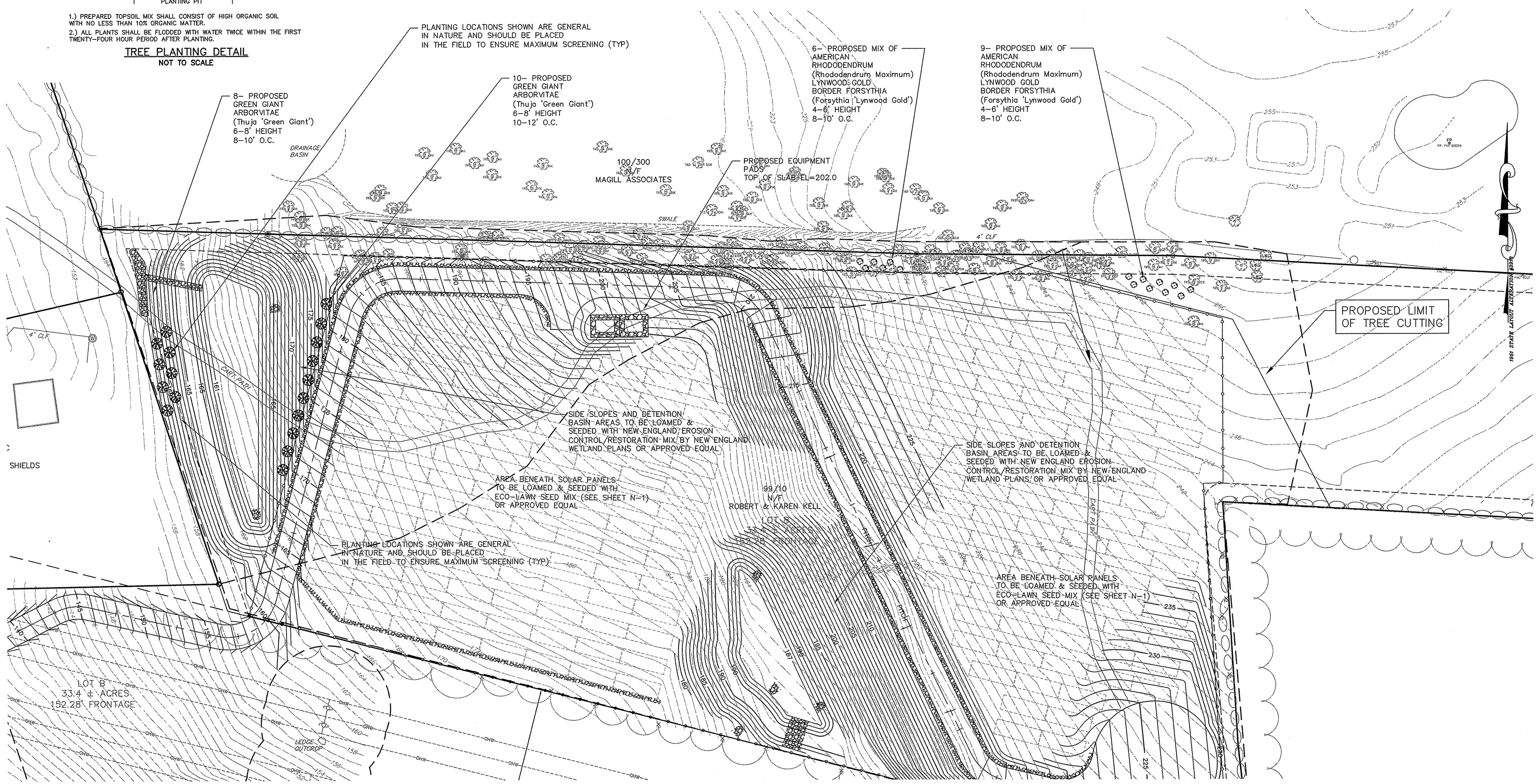

2005_SITE

FIELD ENGINEERING CO., INC.
CONSULTING ENGINEERS

11D INDUSTRIAL DRIVE
P.O. BOX 1178
MATTAPOISETT, MA 02739
TEL: (508) 758-2749
FAX: (508) 758-2849

THE CROCKER BUILDING
4 COURT STREET SUITE 104
TAUNTON, MA 02780
TEL: (508) 824-9279
FAX: (508) 824-9276

Revisions

No.	Description	Date	Appvd.

Date 8/12/15		
Scale 1"=40'		
Drawn By RMS	Designed By RRR	Checked By RRR
Issued For PERMITTING		

COMMONWEALTH OF MASSACHUSETTS
RICHARD R. RICCIO III
CIVIL
No. 45898
REGISTERED PROFESSIONAL ENGINEER
8/12/15

PROPOSED SITE DEVELOPMENT
CEC SOLAR #1056 LLC

207 PROVIDENCE ROAD
GRAFTON, MASSACHUSETTS

Drawing Title
LANDSCAPE PLAN

Project No.	Sheet
2035	9 OF 12

LAND-1

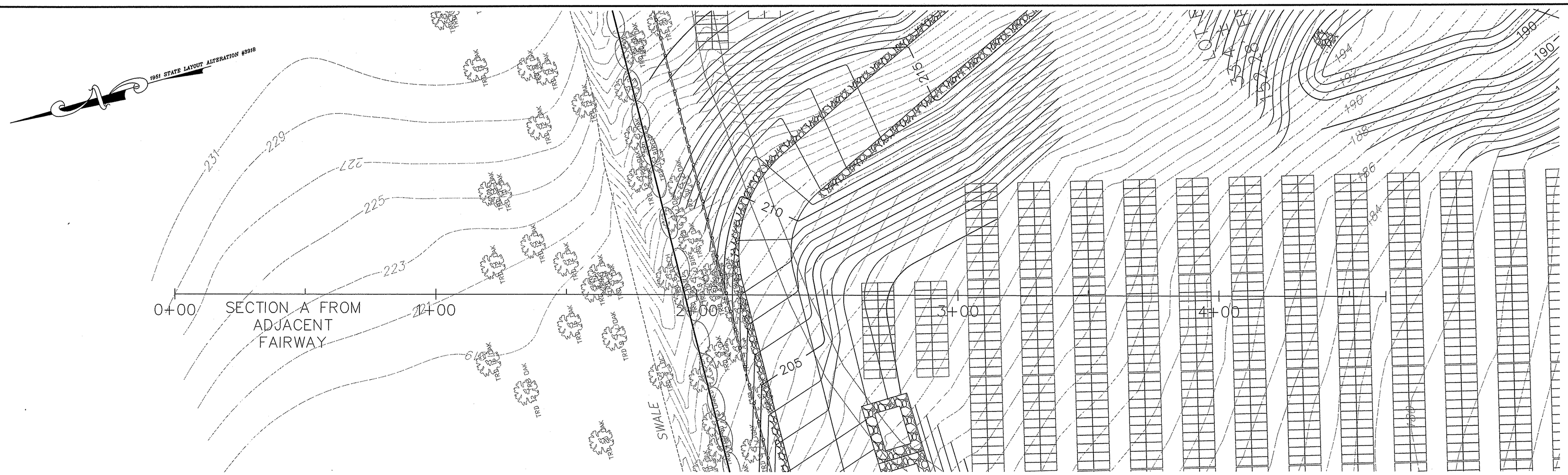

SITE PLAN
SCALE: 1"=20'

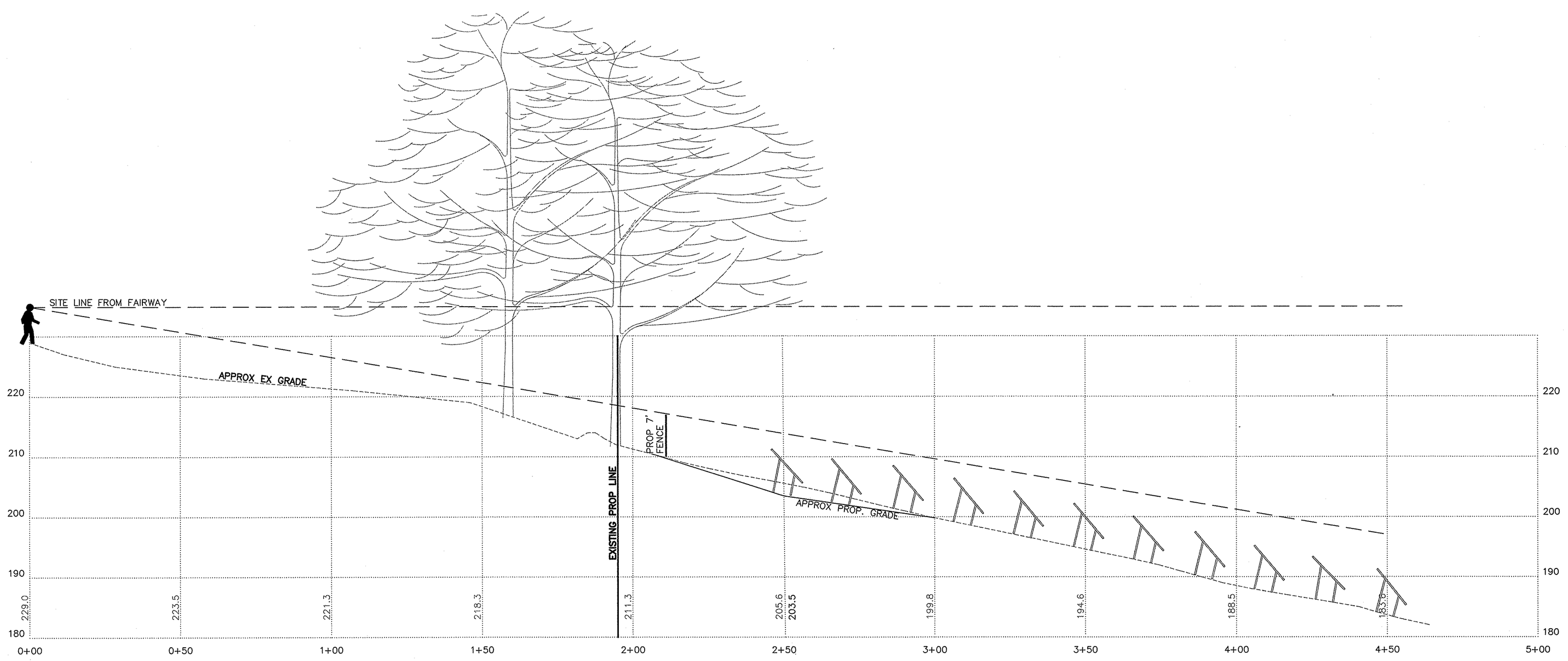

PROFILE A
SCALE: 1"=20' HORIZ.
1"=10' VERT.

FIELD ENGINEERING CO., INC.
CONSULTING ENGINEERS

11D INDUSTRIAL DRIVE
P.O. BOX 1178
MATTAPOISETT, MA 02739
TEL: (508) 758-2749
FAX: (508) 758-2849

THE CROCKER BUILDING
4 COURT STREET SUITE 104
TAUNTON, MA 02780
TEL: (508) 824-9279
FAX: (508) 824-9276

Revisions

No.	Description	Date	Appvd.

Date: 8/12/15

Scale: AS NOTED

Drawn By	Designed By	Checked By
RMS	RRR	RRR

Issued For: PERMITTING

COMMONWEALTH OF MASSACHUSETTS
RICHARD R. PRICCIO III
CIVIL
No. 45888
REGISTERED PROFESSIONAL ENGINEER
8/12/15

PROPOSED SITE DEVELOPMENT
CEC SOLAR #1056 LLC

207 PROVIDENCE ROAD
GRAFTON, MASSACHUSETTS

Drawing Title: VIEW STUDY FROM ADJACENT FAIRWAY

Project No.	Sheet
2035	10 OF 12

VS-1

2035_SITE

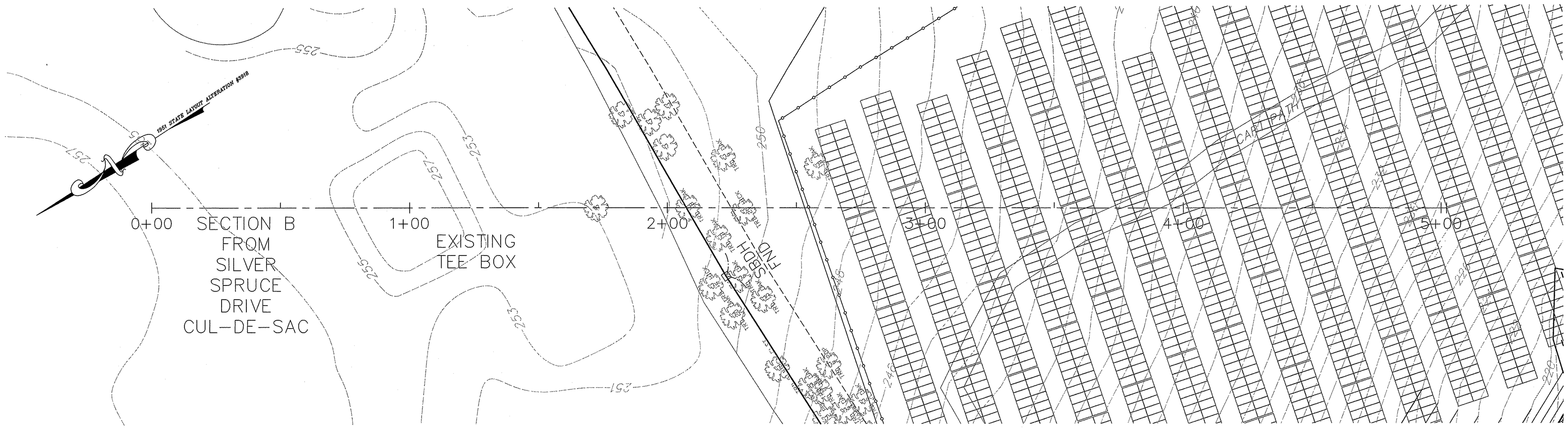

SITE PLAN
SCALE: 1"=20'

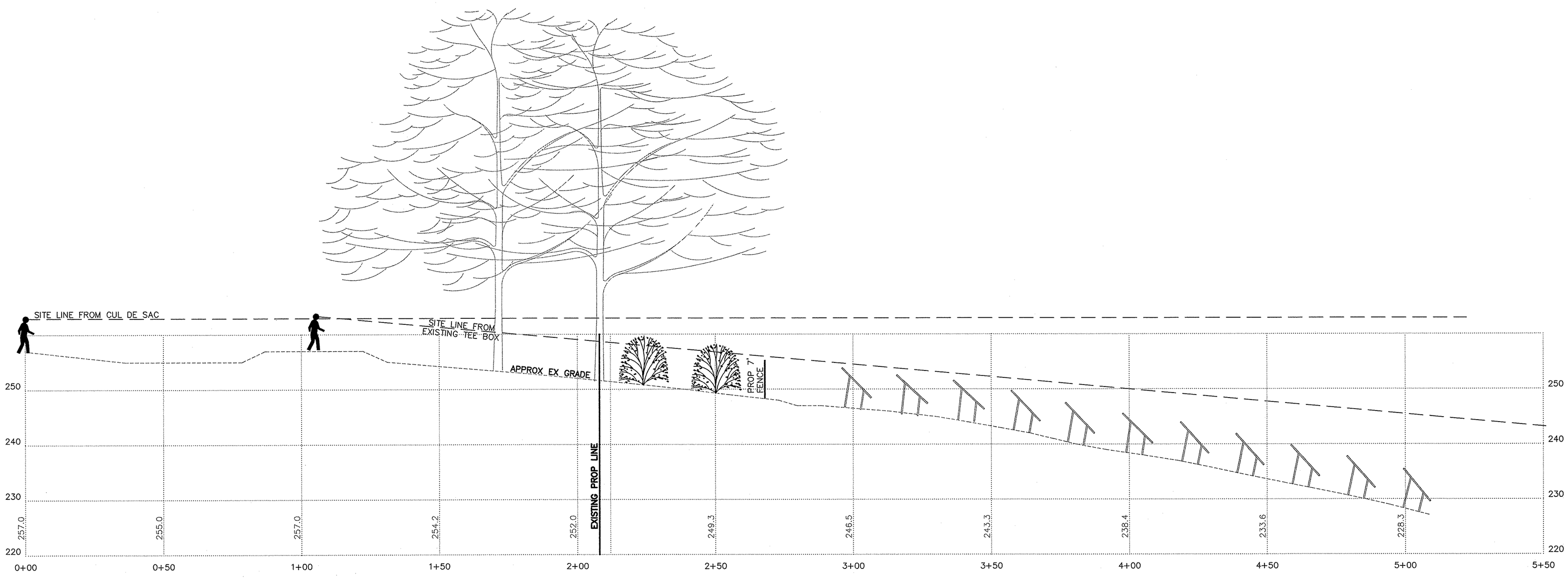

PROFILE B
SCALE: 1"=20' HORIZ.
1"=10' VERT.

FIELD ENGINEERING CO., INC.
CONSULTING ENGINEERS

11D INDUSTRIAL DRIVE
P.O. BOX 1178
MATTAPOISETT, MA 02739
TEL: (508) 758-2749
FAX: (508) 758-2849

THE CROCKER BUILDING
4 COURT STREET SUITE 104
TAUNTON, MA 02780
TEL: (508) 824-9279
FAX: (508) 824-9276

Revisions

No.	Description	Date	Apprvd.

Date 8/12/15

Scale AS NOTED

Drawn By	Designed By	Checked By
RMS	RRR	RRR

Issued For
PERMITTING

COMMONWEALTH OF MASSACHUSETTS
RICHARD R. RICCIO III
CIVIL
No. 45888
REGISTERED PROFESSIONAL ENGINEER
8/12/15

PROPOSED SITE DEVELOPMENT
CEC SOLAR #1056 LLC

207 PROVIDENCE ROAD
GRAFTON, MASSACHUSETTS

Drawing Title
VIEW STUDY FROM SILVER SPRUCE DR

Project No.	Sheet
2035	11 OF 12

VS-2

2035_SITE

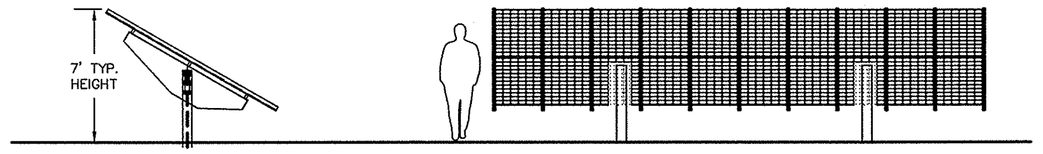

REPRESENTATIVE VIEWS
SOLAR PANEL INSTALLATION
NOT TO SCALE

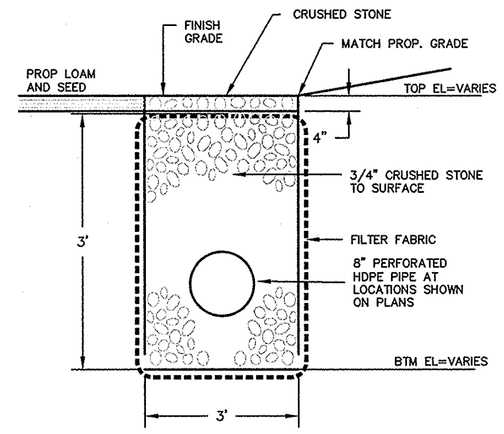

CRUSHED STONE TRENCH
NOT TO SCALE

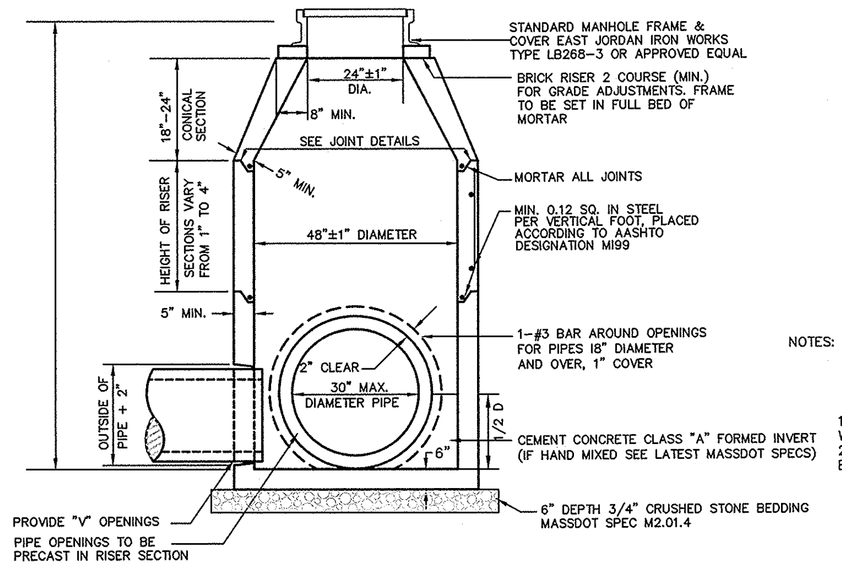

TYPICAL DRAIN MANHOLE
NOT TO SCALE

NOTES:
1. MANHOLE DESIGN TO CONFORM TO ASTM C478 LATEST REVISION.
2. CONCRETE SHALL BE WET CAST 4000 P.S.I. @ 28 DAYS.
3. USE FLAT TOP SLAB WHERE FINISHED GRADE ELEVATIONS PROHIBIT THE USE OF A CONE SECTION.
4. FILL OUTSIDE FACE OF ALL MANHOLE JOINTS WITH NON-SHRINK MORTAR.
5. WHERE DRAIN MANHOLES OF GREATER DIAMETER ARE SPECIFIED ON THE PLANS, THEIR CONSTRUCTION SHALL MEET THE TYPICAL DRAIN MANHOLE SPECIFICATIONS.

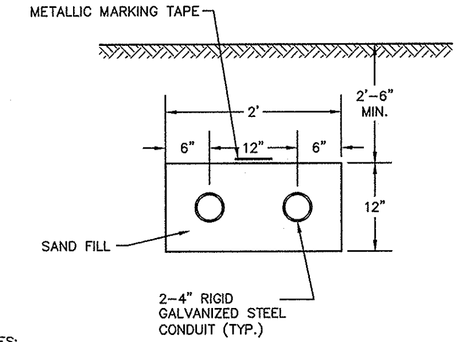

2 CONDUIT UTILITY DUCT BANK
NOT TO SCALE

NOTES:
1. COORDINATE EXACT DIMENSIONS AND LOCATIONS WITH SOLAR PANEL VENDOR PRIOR TO CONSTRUCTION
2. REVIEW AND COORDINATE MATERIALS AND SPECIFICATIONS ON ELECTRICAL CONDUIT WITH NATIONAL GRID PRIOR TO CONSTRUCTION.

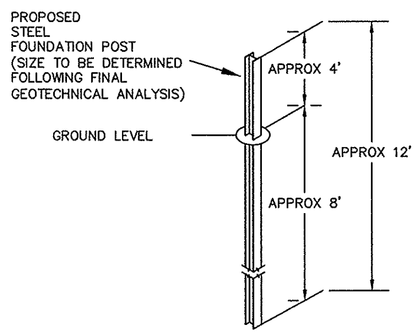

TYPICAL FOUNDATION DETAIL
NOT TO SCALE

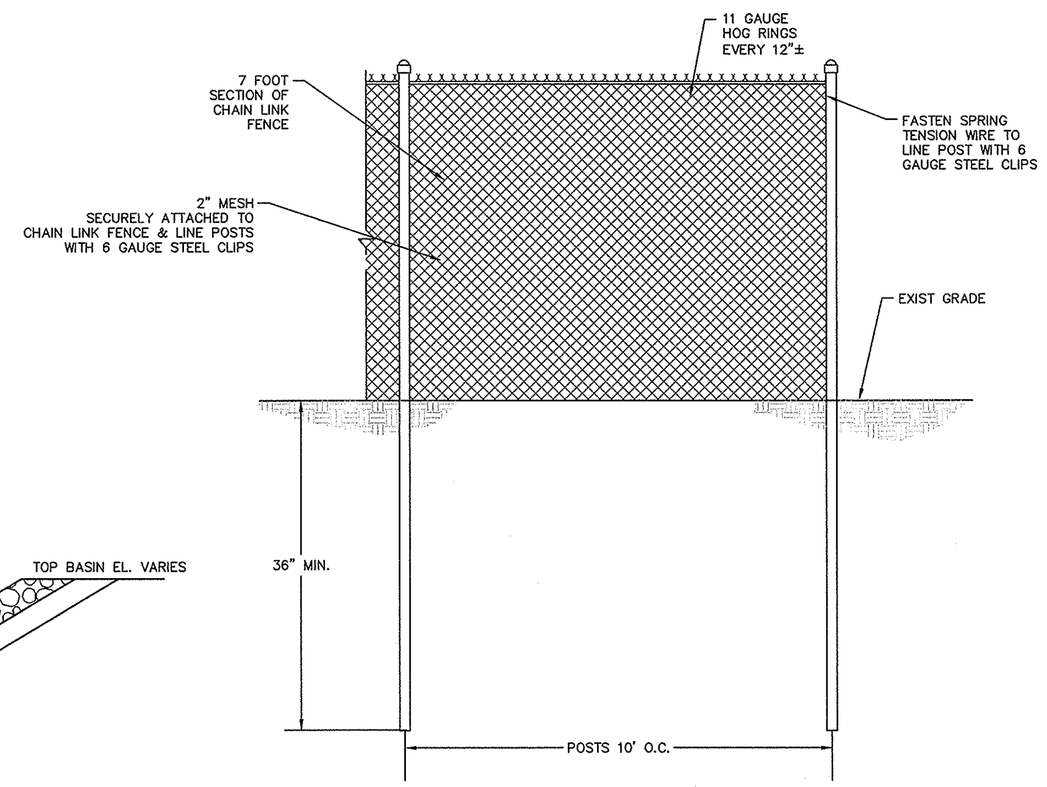

SECURITY FENCE DETAIL
NOT TO SCALE

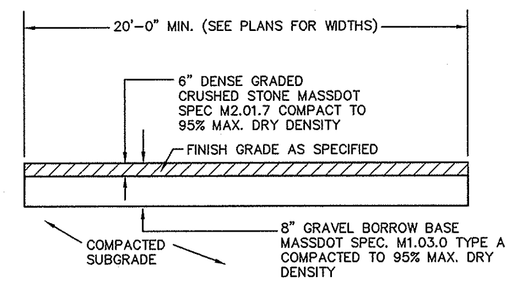

GRAVEL ACCESS ROAD AND PARKING AREA SECTION
NOT TO SCALE

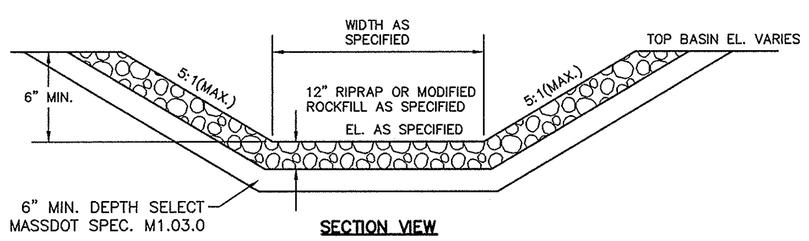

EMERGENCY OVERFLOW SPILLWAY
NOT TO SCALE

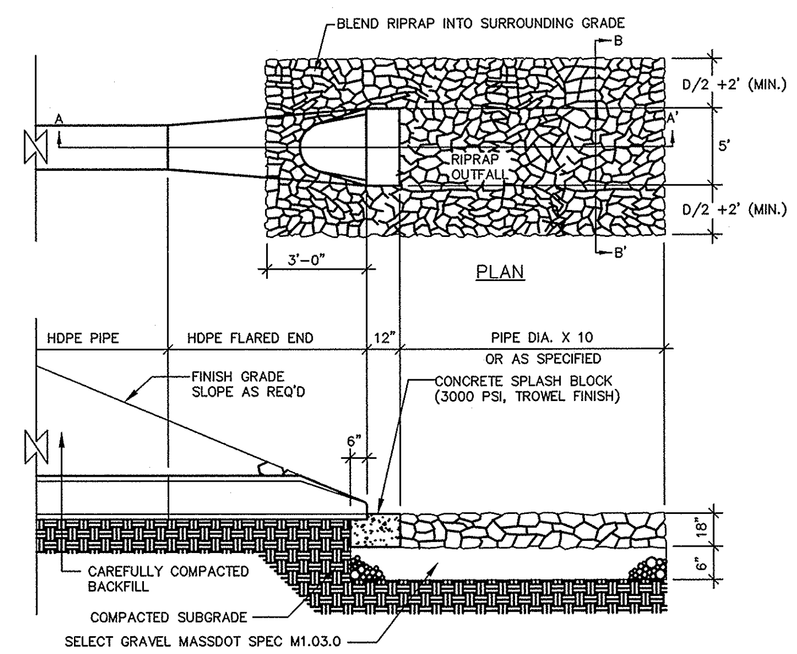

FLARED END AND RIPRAP AT ALL PIPE ENDS
NOT TO SCALE
1.) RIP RAP SHALL CONFORM TO MASSDOT SPECIFICATIONS M2.02.3

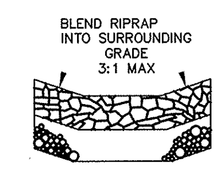

SECTION B-B'

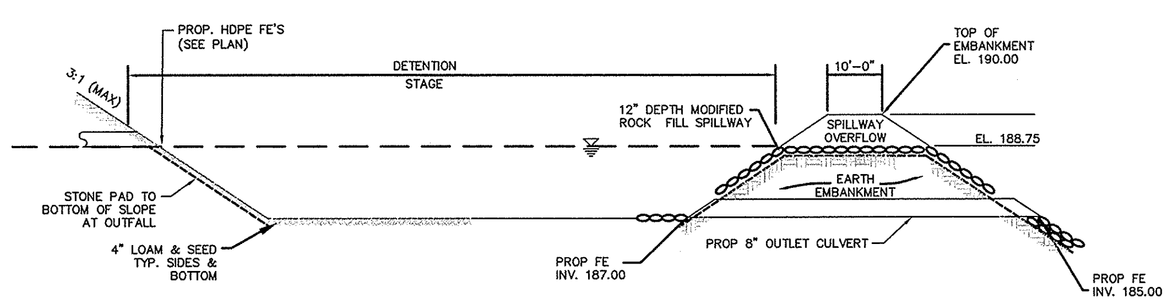

DETENTION BASIN #2 SECTION
NOT TO SCALE

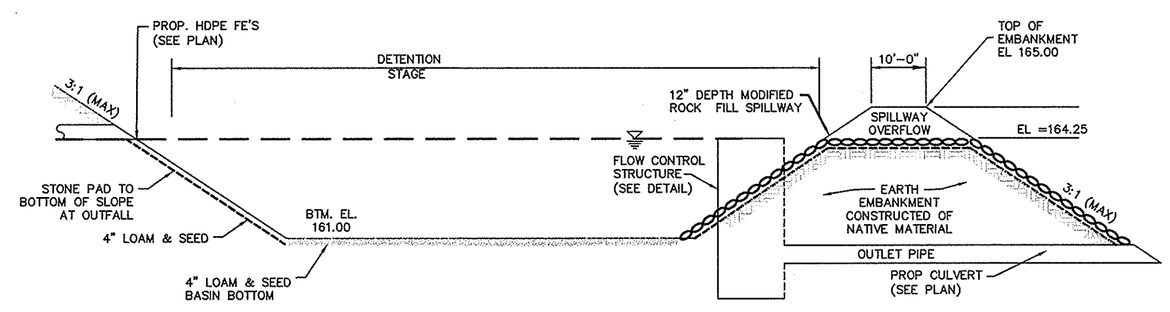

DETENTION BASIN #1 SECTION

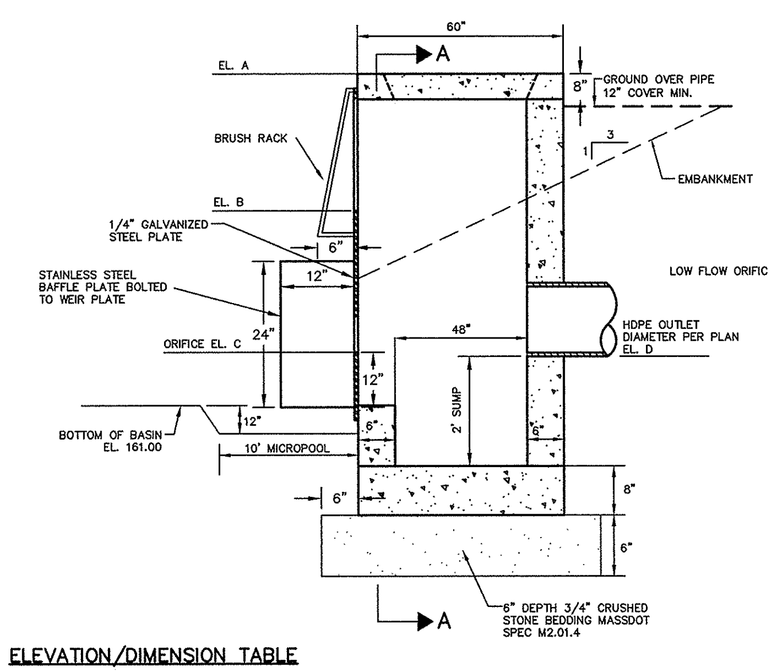

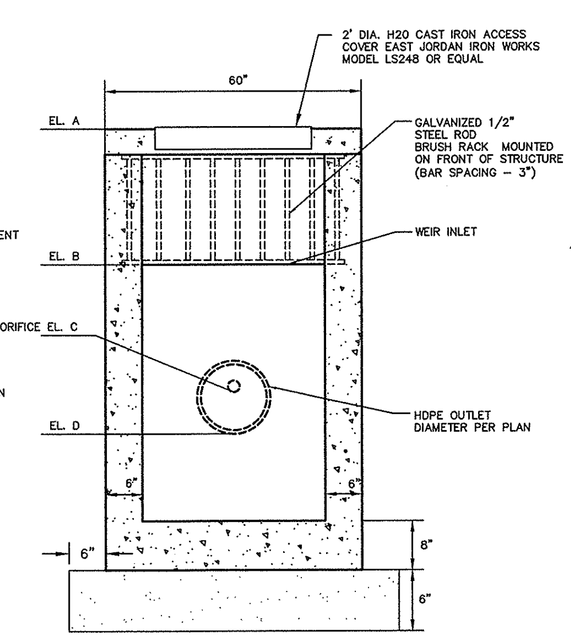

SECTION A-A
NOT TO SCALE

FLOW CONTROL STRUCTURE
NOT TO SCALE

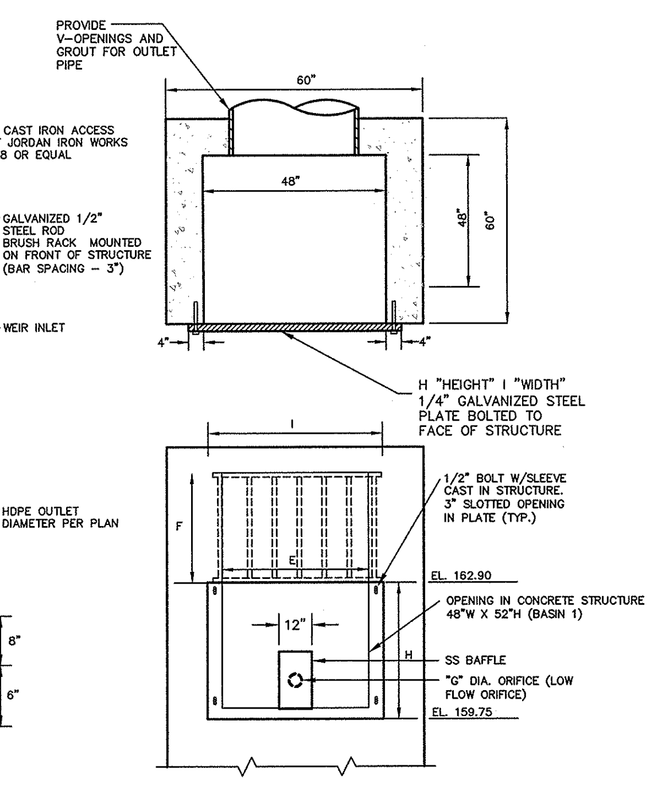

OUTLET PLATE
NOT TO SCALE

ELEVATION/DIMENSION TABLE

STRUCTURE:	A	B	C	D	E	F	G	H	I
DETENTION BASIN #1	165.00	162.90	161.00	160.00	48"	17"	8"	38"	52"

FIELD ENGINEERING CO., INC.
CONSULTING ENGINEERS

11D INDUSTRIAL DRIVE
P.O. BOX 1178
MATTAPOISETT, MA 02739
TEL: (508) 758-2749
FAX: (508) 758-2849

THE CROCKER BUILDING
4 COURT STREET SUITE 104
TAUNTON, MA 02780
TEL: (508) 824-9279
FAX: (508) 824-9276

Revisions

No.	Description	Date	Appvd.

Date 8/12/15

Scale NO SCALE

Drawn By	Designed By	Checked By
RMS	RRR	RRR

Issued For
PERMITTING

COMMONWEALTH OF MASSACHUSETTS
RICHARD R. RICCIO III
CIVIL
No. 45898
REGISTERED PROFESSIONAL ENGINEER
8/12/15

PROPOSED SITE DEVELOPMENT
CEC SOLAR #1056 LLC
207 PROVIDENCE ROAD
GRAFTON, MASSACHUSETTS

Drawing Title
SITE DETAILS

Project No.	Sheet
2035	12 OF 12

DET-1

2035_Notes-Details