WORCESTER DISTRICT REGISTRY
OF DEEDS-WORCESTER, MA
PLAN BOOK 764 PLAN 15
Received 12/16/16
12 h 09 m
Sheet 1 of 11
With Doc. #
in BOOK PAGE
Fee $ 825.
ATTEST:
Register

I HEREBY CERTIFY THAT THIS PLAN WAS PREPARED IN CONFORMANCE WITH THE RULES AND REGULATIONS OF THE REGISTERS OF DEEDS.
10/26/16
VAROUJAN H. HAGOPIAN, P.L.S. 49665

COMMONWEALTH OF MASSACHUSETTS
VAROUJAN H HAGOPIAN
No. 49665
PROFESSIONAL LAND SURVEYOR

GENERAL NOTES:

1. EXISTING TOPOGRAPHY IS BASED UPON AERIAL PHOTOGRAMMETRY OBTAINED FROM COL-EAST, INC. ELEVATIONS ARE BASED UPON NORTH AMERICAN VERTICAL DATUM (NAVD) OF 1988.
2. PROPERTY LINES ARE BASED UPON ON-GROUND SURVEY BY CONNORSTONE ENGINEERING, INC. AS SHOWN ON MODIFIED DEFINITIVE PLANS FOR GRAFTON HILL IN GRAFTON, MA DATED SEPTEMBER 30, 2015.
3. ALL SOILS ARE IN HYDROLOGIC GROUP "C", WHICH INCLUDE PAXTON AND WOODBRIDGE. BASED ON THE LATEST SOIL REPORTS FROM THE UNITED STATES DEPARTMENT OF AGRICULTURE, NATURAL RESOURCE CONSERVATION SERVICE.
4. THE RAILROAD DEMARKS THE CHANGE IN ZONING ON THE SITE. THE LAND TO THE EAST OF THE R.R. TRACKS LIES IN THE R/40 ZONE, LAND TO THE WEST LIES WITHIN THE R/20 ZONE.
5. WETLAND DELINEATION ON LOCUS WAS PERFORMED BY GODDARD CONSULTING, AND FIELD LOCATED BY CONNORSTONE ENGINEERING, INC. BETWEEN DECEMBER 2011 AND AUGUST 2012.
6. THE SITE IS NOT LOCATED WITHIN THE 100 YEAR FEDERAL FLOOD HAZARD AREA AS SHOWN ON THE FLOOD INSURANCE RATE MAPS FOR WORCESTER COUNTY, MAP No. 25027C0829E AND 25027C0833E, DATED JULY 4, 2010.
7. EXISTING UTILITY LINES SHOWN ON THIS DRAWING ARE FROM AVAILABLE INFORMATION AND ARE APPROXIMATE LOCATIONS. THE ENGINEER DOES NOT GUARANTEE THEIR ACCURACY OR THAT ALL UTILITIES AND SUBSURFACE STRUCTURES ARE SHOWN. THE CONTRACTOR SHALL VERIFY SIZE, LOCATION AND INVERT ELEVATIONS OF THE UTILITIES AND STRUCTURES, AS REQUIRED PRIOR TO THE START OF CONSTRUCTION. ANY DISCREPANCIES WITH RECORD DATA SHALL BE REPORTED TO THE ENGINEER IMMEDIATELY. THE CONTRACTOR SHALL CONTACT DIG SAFE: 1-800-344-7233 (72 HOURS BEFORE DIGGING), AND TOWN DPW FOR UTILITY LOCATIONS PRIOR TO EXCAVATION. TEST PITS SHALL BE UTILIZED FOR UTILITY CONNECTIONS.

CONSTRUCTION NOTES:

1. ALL MATERIALS AND CONSTRUCTION PRACTICES SHALL BE IN CONFORMANCE WITH THE STANDARDS AND SPECIFICATIONS GRAFTON DEPARTMENT OF PUBLIC WORKS, OR THE LATEST EDITION OF THE MASSACHUSETTS HIGHWAY DEPARTMENT (MHD) CONSTRUCTION STANDARDS AND THE MHD 'STANDARD SPECIFICATIONS FOR HIGHWAYS AND BRIDGES', WHICHEVER IS MORE STRINGENT.
4. SEWER AND WATER CONNECTIONS SHALL BE INSTALLED IN COMPLIANCE WITH THE STANDARDS AND SPECIFICATIONS OF THE GRAFTON DEPARTMENT OF PUBLIC WORKS. CONNECTIONS SHALL BE MADE IN ACCORDANCE WITH APPLICABLE PERMITS (TO BE OBTAINED BY THE CONTRACTOR).
5. THE CONTRACTOR SHALL KEEP ACCURATE RECORDS OF ALL CONCEALED AND UNDERGROUND WORK. AS BUILT PLANS WILL BE FURNISHED TO THE DEPARTMENT OF PUBLIC WORKS IN DUPLICATE, BY THE CONTRACTOR, OR OWNER, AT THE COMPLETION OF THE PROJECT. THE PLANS IN PARTICULAR WILL DEPICT EXACT DISTANCES BETWEEN GATE VALVES, AND TIES TO GATE VALVES BOTH IN THE MAIN AND ON HYDRANT BRANCHES. CURB BOX LOCATIONS SHALL BE REFERENCED TO THE HOUSE OR BUILDING THAT IT SERVES BY AT LEAST TWO TIES FROM PERMANENT POINTS.
6. THE LAYOUT AND INSTALLATION OF ELECTRIC, GAS, TELEPHONE AND CATV UTILITY CONNECTIONS AND SERVICES SHALL IN ACCORDANCE WITH THE REQUIREMENTS OF THE RESPECTIVE UTILITY.
7. IT SHALL BE THE RESPONSIBILITY OF THE CONTRACTOR TO COORDINATE HIS WORK WITH THE APPROPRIATE HIGHWAY & UTILITY DEPARTMENTS. CONTRACTOR SHALL MAINTAIN ALL EXISTING AND NEWLY INSTALLED UTILITIES IN GOOD WORKING ORDER AND SHALL PROTECT THEM FROM DAMAGE AT ALL TIMES UNTIL THE WORK IS COMPLETED AND ACCEPTED.
8. WORK WITHIN THE HIGHWAY LAYOUT, IF APPLICABLE, SHALL CONFORM TO THE CONDITIONS OF THE PERMIT ISSUED BY THE MASSACHUSETTS HIGHWAY DEPARTMENT AND/OR LOCAL AUTHORITY AS APPROPRIATE.
9. THE CONTRACTOR SHALL UTILIZE ALL MEASURES AND MATERIALS NECESSARY TO ENSURE THE SAFETY OF ALL PERSONS AND PROPERTIES AT THE SITE DURING CONSTRUCTION. ALL EXCAVATIONS SHALL CONFORM TO CURRENT OSHA STANDARDS.
10. ALL SIGN SIZES AND MATERIAL SHALL CONFORM TO THE "MANUAL ON UNIFORM TRAFFIC DEVICES" (MUTCD) AND THE OFFICE OF TRAFFIC OPERATIONS, FEDERAL HIGHWAY ADMINISTRATION, U.S. DEPARTMENT OF TRANSPORTATION.
11. ALL RAMPS, CURB CUTS, SIDEWALKS, AND ACCESSIBLE SPACES SHALL COMPLY WITH THE AMERICANS WITH DISABILITIES ACT REGULATIONS AND WITH ARCHITECTURAL ACCESS BOARD REGULATIONS (521 CMR 1-47).
12. ALL EXCAVATION AND EARTHWORK SHALL BE PERFORMED IN ACCORDANCE WITH THE LATEST EDITION OF THE MASSACHUSETTS HIGHWAY DEPARTMENT (MHD) STANDARD SPECIFICATIONS FOR HIGHWAYS AND BRIDGES, SECTIONS 120, 140, 150, AND 170.

REFERENCES

DEED BOOK 43570, PG. 163
PLAN BOOK 202, PLAN 33
PLAN BOOK 161, PLAN 43
PLAN BOOK 139, PLAN 23
PLAN BOOK 797, PLAN 111
PLAN BOOK 615, PLAN 84
PLAN BOOK 285, PLAN 84
PLAN BOOK 827, PLAN 64
PLAN BOOK 587, PLAN 60
PLAN BOOK 400, PLAN 47
PLAN BOOK 384, PLAN 21
PLAN BOOK 523, PLAN 45
PLAN BOOK 770, PLAN 10
GRAFTON/UPTON R.R. VALUATION PLANS

REFERENCE GRAFTON PLANNING BOARD DECISION WORCESTER REGISTRY OF DEEDS BOOK 56093, PAGE 26.

SEE CONDITIONS OF APPROVAL LISTED ON SHEET 6 OF 6.

APPROVAL UNDER THE SUBDIVISION CONTROL LAW, IS REQUIRED.
GRAFTON PLANNING BOARD

DATE: 12-12-2016

I, Donna M. Girouard CLERK OF THE TOWN OF GRAFTON RECEIVED AND RECORDED APPROVAL FROM THE PLANNING BOARD OF THIS PLAN ON Feb 10, 2016 AND NO APPEAL WAS TAKEN FOR TWENTY (20) DAYS THEREAFTER.

GRAPHIC SCALE: 1"=100'
0 50 75 100 150 200 300 400 500 FEET
0 10 20 30 40 50 75 100 125 150 METERS

APPLICANT:
WESTERLY SIDE GRAFTON LLC
117 WATER ST., SUITE 201
MILFORD, MA 01757

COMMONWEALTH OF MASSACHUSETTS
VITO COLONNA
CIVIL
No. 47635
REGISTERED PROFESSIONAL ENGINEER
10.26.16

MODIFIED DEFINITIVE SUBDIVISION PLAN

CONNORSTONE
CONSULTING CIVIL ENGINEERS
AND LAND SURVEYORS
10 SOUTHWEST CUTOFF, SUITE 7
NORTHBOROUGH, MASSACHUSETTS 01532
PHONE: (508)-393-9727 FAX: (508)-393-5242

DESIGNED BY: VC, REM
CHECKED BY: VC
COMPUTED BY:
FIELD SURVEY: VHH
DRAWN BY: REM
SCALE: 1" = 100'
SHEET 1 OF 11

EXISTING CONDITIONS PLAN
OF
GRAFTON HILL
IN
GRAFTON, MA

REVISIONS
10/26/2016
6/28/2016
1/8/2016
12/28/2015
11/23/2015
SEPTEMBER 30, 2015

APPROVAL UNDER THE SUBDIVISION CONTROL LAW, IS REQUIRED.
GRAFTON PLANNING BOARD

DATE: 12-12-2016

I, Denise McGrouard CLERK OF THE TOWN OF GRAFTON RECEIVED AND RECORDED APPROVAL FROM THE PLANNING BOARD OF THIS PLAN ON Feb 10, 2016 AND NO APPEAL WAS TAKEN FOR TWENTY (20) DAYS THEREAFTER.

REFERENCE GRAFTON PLANNING BOARD DECISION WORCESTER REGISTRY OF DEEDS BOOK 56093, PAGE 26.

SEE CONDITIONS OF APPROVAL LISTED ON SHEET 6 OF 6.

I HEREBY CERTIFY THAT THIS PLAN WAS PREPARED IN CONFORMANCE WITH THE RULES AND REGULATIONS OF THE REGISTERS OF DEEDS.

10/26/16
VAROUJAN H. HAGOPIAN, P.L.S. 49665

COMMONWEALTH OF MASSACHUSETTS
VAROUJAN H. HAGOPIAN
No. 49665
PROFESSIONAL LAND SURVEYOR

PLAN BOOK 924 PLAN 15
SHEET 2 OF 11

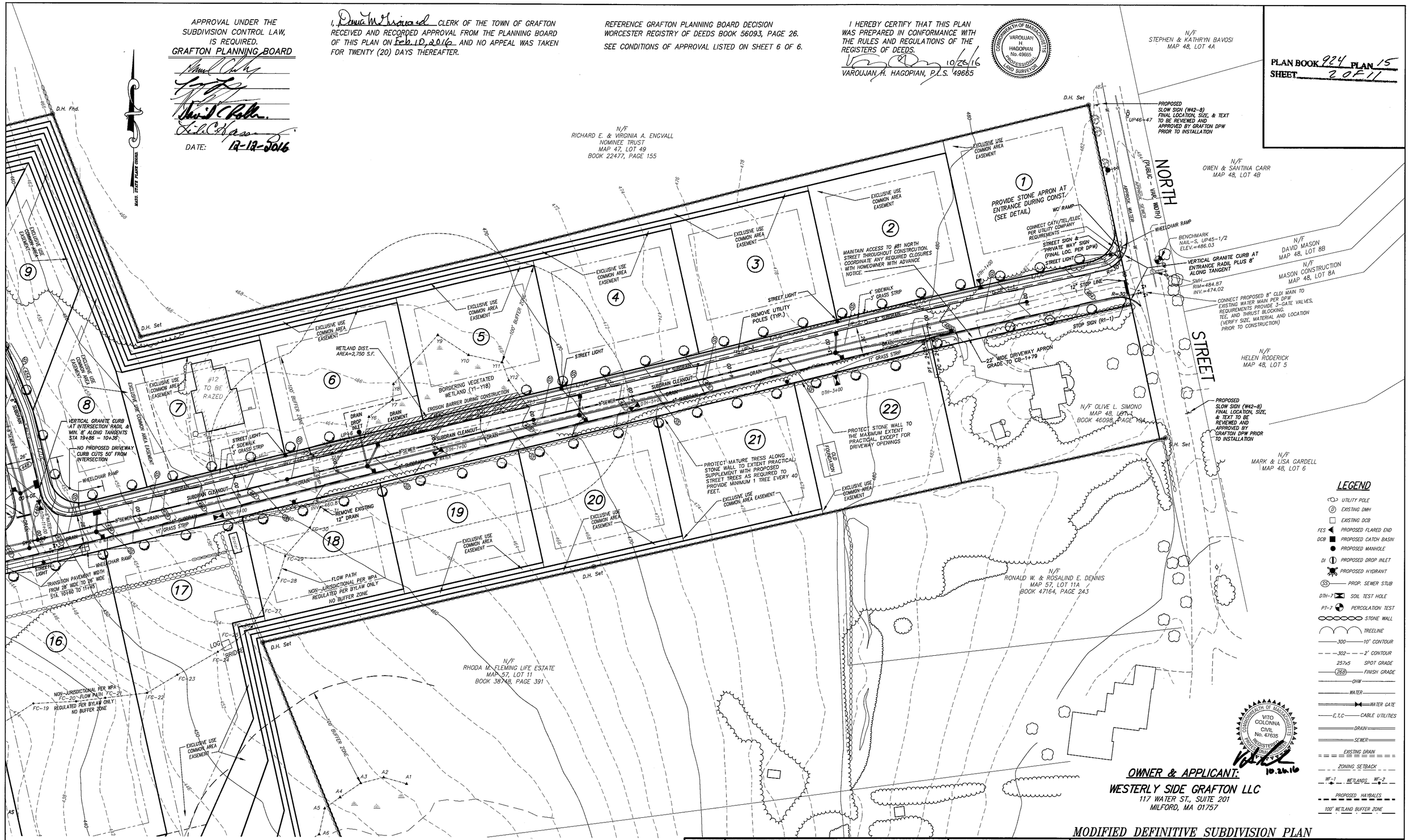

LEGEND

- UTILITY POLE
- EXISTING DMH
- EXISTING DCB
- FES — PROPOSED FLARED END
- DCB — PROPOSED CATCH BASIN
- PROPOSED MANHOLE
- DI — PROPOSED DROP INLET
- PROPOSED HYDRANT
- SS — PROP. SEWER STUB
- DTH-7 — SOIL TEST HOLE
- PT-7 — PERCOLATION TEST
- STONE WALL
- TREELINE
- 300 — 10' CONTOUR
- 302 — 2' CONTOUR
- 257x5 — SPOT GRADE
- (268) — FINISH GRADE
- OHW
- WATER
- WATER GATE
- E,T,C — CABLE UTILITIES
- DRAIN
- SEWER
- EXISTING DRAIN
- ZONING SETBACK
- WF-1 WETLANDS WF-2
- PROPOSED HAYBALES
- 100' WETLAND BUFFER ZONE

COMMONWEALTH OF MASSACHUSETTS
VITO COLONNA
CIVIL
No. 47635
REGISTERED PROFESSIONAL ENGINEER
10.26.16

OWNER & APPLICANT:
WESTERLY SIDE GRAFTON LLC
117 WATER ST., SUITE 201
MILFORD, MA 01757

MODIFIED DEFINITIVE SUBDIVISION PLAN

CONNORSTONE
CONSULTING CIVIL ENGINEERS AND LAND SURVEYORS
10 SOUTHWEST CUTOFF, SUITE 7
NORTHBOROUGH, MASSACHUSETTS 01532
PHONE: (508)-393-9727 FAX: (508)-393-5242

DESIGNED BY: VC, REM
CHECKED BY: VC
COMPUTED BY:
FIELD SURVEY: VHH
DRAWN BY: REM
SCALE: 1" = 40'
SHEET 2 OF 11

TOPOGRAPHIC PLAN OF GRAFTON HILL IN GRAFTON, MA

REVISIONS
10/26/2016
6/28/2016
1/8/2016
12/28/2015
11/23/2015
SEPTEMBER 30, 2015

PLAN BOOK 924 PLAN 15
SHEET 3 OF 11

APPROVAL UNDER THE SUBDIVISION CONTROL LAW, IS REQUIRED.
GRAFTON PLANNING BOARD

DATE: 12-12-2016

I, Denise M. Giroux CLERK OF THE TOWN OF GRAFTON RECEIVED AND RECORDED APPROVAL FROM THE PLANNING BOARD OF THIS PLAN ON Feb. 10, 2016 AND NO APPEAL WAS TAKEN FOR TWENTY (20) DAYS THEREAFTER.

REFERENCE GRAFTON PLANNING BOARD DECISION WORCESTER REGISTRY OF DEEDS BOOK 56093, PAGE 26.

SEE CONDITIONS OF APPROVAL LISTED ON SHEET 6 OF 6.

I HEREBY CERTIFY THAT THIS PLAN WAS PREPARED IN CONFORMANCE WITH THE RULES AND REGULATIONS OF THE REGISTERS OF DEEDS.

COMMONWEALTH OF MASSACHUSETTS VAROUJAN H. HAGOPIAN No. 49665 PROFESSIONAL LAND SURVEYOR

10/26/16
VAROUJAN H. HAGOPIAN, P.L.S. 49665

COMMONWEALTH OF MASSACHUSETTS VITO COLONNA CIVIL No. 47635 REGISTERED PROFESSIONAL ENGINEER

10.26.16

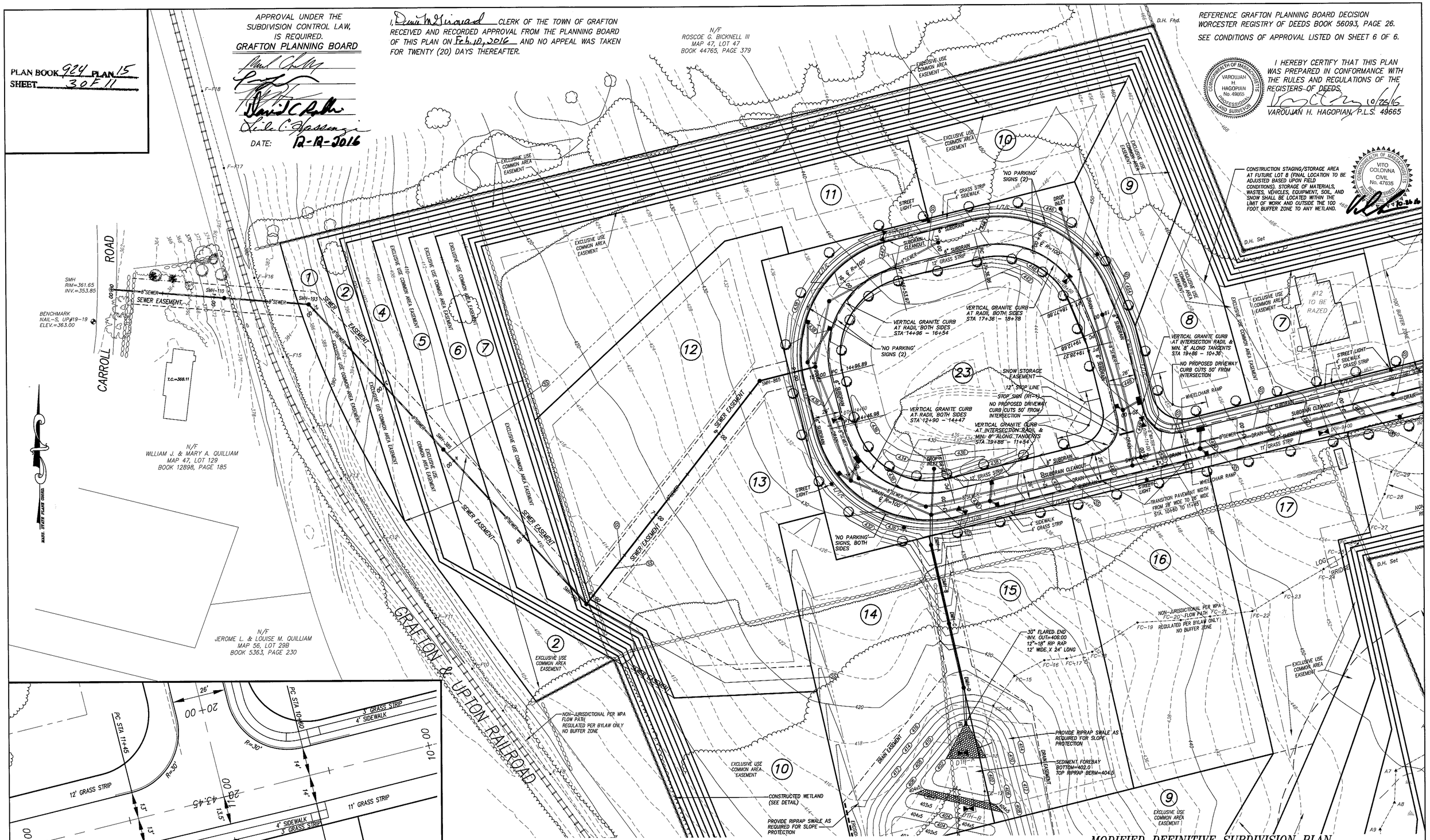

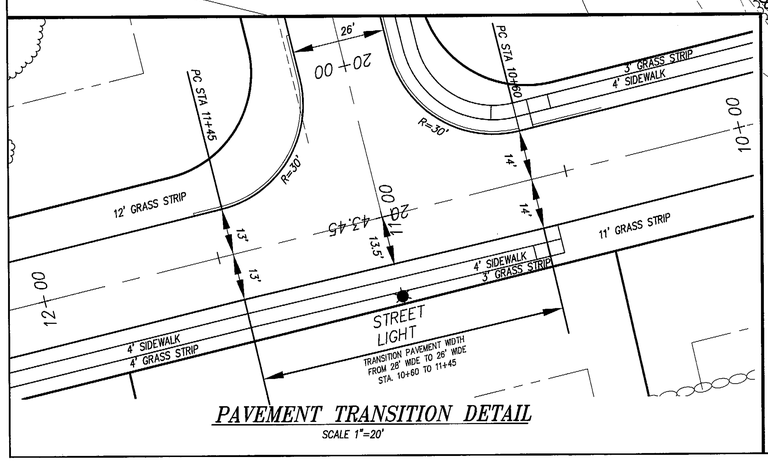

PAVEMENT TRANSITION DETAIL
SCALE 1"=20'

OWNER & APPLICANT:
WESTERLY SIDE GRAFTON LLC
117 WATER ST., SUITE 201
MILFORD, MA 01757

GRAPHIC SCALE: 1"=40'

CONNORSTONE
CONSULTING CIVIL ENGINEERS AND LAND SURVEYORS
10 SOUTHWEST CUTOFF, SUITE 7
NORTHBOROUGH, MASSACHUSETTS 01532
PHONE: (508)-393-9727 FAX: (508)-393-5242

DESIGNED BY:	VC, REM
CHECKED BY:	VC
COMPUTED BY:	
FIELD SURVEY:	VHH
DRAWN BY:	REM
SCALE:	1" = 40'
SHEET	3 OF 11

MODIFIED DEFINITIVE SUBDIVISION PLAN

TOPOGRAPHIC PLAN OF GRAFTON HILL IN GRAFTON, MA

REVISIONS
10/26/2016
6/28/2016
1/8/2016
12/28/2015
11/23/2015
SEPTEMBER 30, 2015

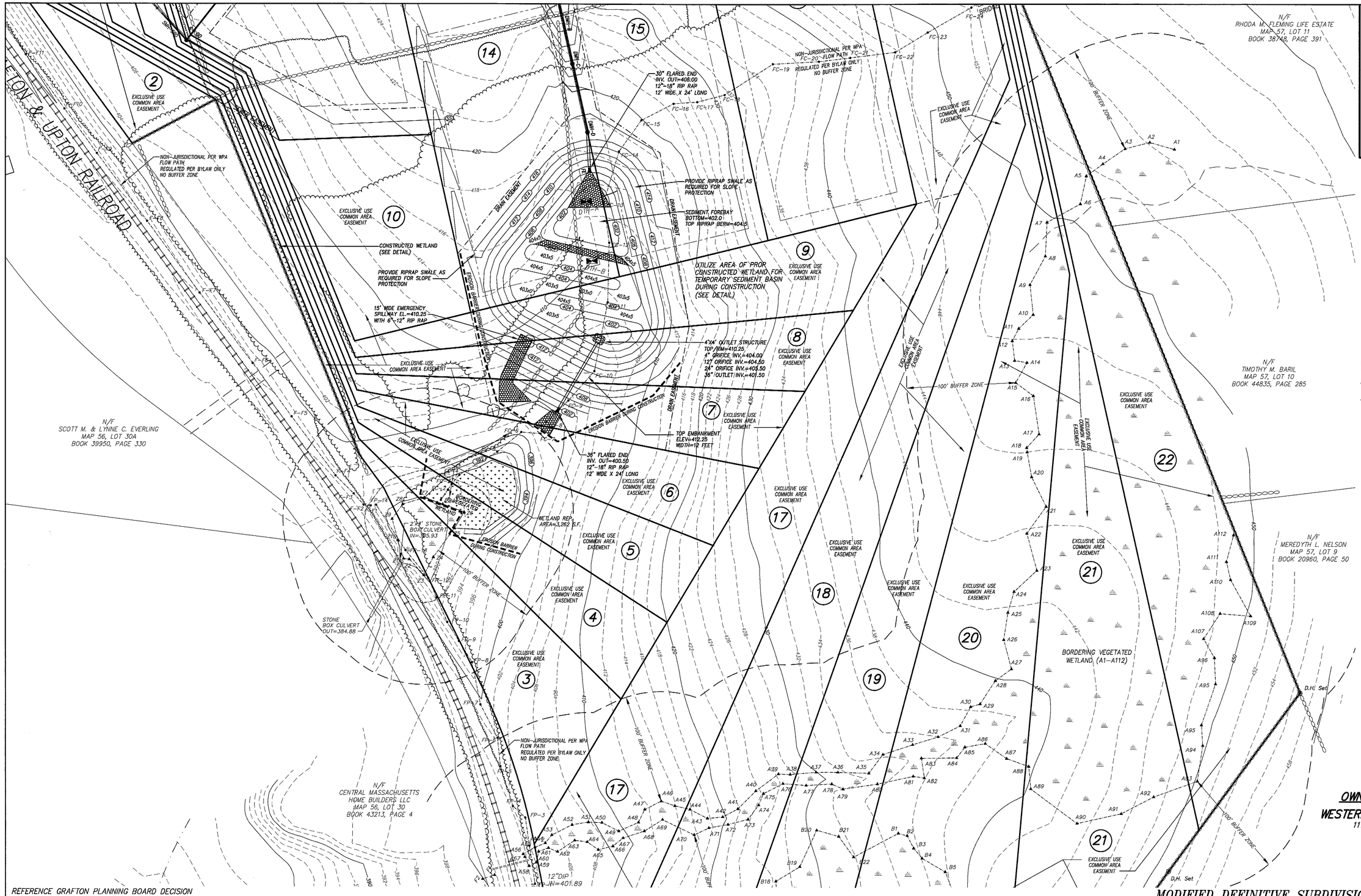

PLAN BOOK 924 PLAN 15
SHEET 4 of 11

APPROVAL UNDER THE SUBDIVISION CONTROL LAW, IS REQUIRED.
GRAFTON PLANNING BOARD

DATE: 12-12-2016

I HEREBY CERTIFY THAT THIS PLAN WAS PREPARED IN CONFORMANCE WITH THE RULES AND REGULATIONS OF THE REGISTERS OF DEEDS.

10/26/16
VAROUJAN H. HAGOPIAN, P.L.S. 49665

COMMONWEALTH OF MASSACHUSETTS
VAROUJAN H. HAGOPIAN
No. 49665
PROFESSIONAL LAND SURVEYOR

COMMONWEALTH OF MASSACHUSETTS
VITO COLONNA
CIVIL
No. 47635
REGISTERED PROFESSIONAL ENGINEER

10.26.16

OWNER & APPLICANT:
WESTERLY SIDE GRAFTON LLC
117 WATER ST., SUITE 201
MILFORD, MA 01757

REFERENCE GRAFTON PLANNING BOARD DECISION WORCESTER REGISTRY OF DEEDS BOOK 56093, PAGE 26.

SEE CONDITIONS OF APPROVAL LISTED ON SHEET 6 OF 6.

I, Dana M Guiseard CLERK OF THE TOWN OF GRAFTON RECEIVED AND RECORDED APPROVAL FROM THE PLANNING BOARD OF THIS PLAN ON Feb. 10, 2016 AND NO APPEAL WAS TAKEN FOR TWENTY (20) DAYS THEREAFTER.

GRAPHIC SCALE: 1"=40'
0 10 20 30 40 50 75 100 150 200 FEET
0 5 10 15 20 30 40 50 60 METERS

MODIFIED DEFINITIVE SUBDIVISION PLAN

CONNORSTONE CONSULTING CIVIL ENGINEERS AND LAND SURVEYORS 10 SOUTHWEST CUTOFF, SUITE 7 NORTHBOROUGH, MASSACHUSETTS 01532 PHONE: (508)-393-9727 FAX: (508)-393-5242	DESIGNED BY: VC, REM CHECKED BY: VC COMPUTED BY: FIELD SURVEY: VHH DRAWN BY: REM SCALE: 1" = 40' SHEET 4 OF 11	TOPOGRAPHIC PLAN OF GRAFTON HILL IN GRAFTON, MA	10/26/2016 6/28/2016 1/8/2016 12/28/2015 11/23/2015 REVISIONS SEPTEMBER 30, 2015

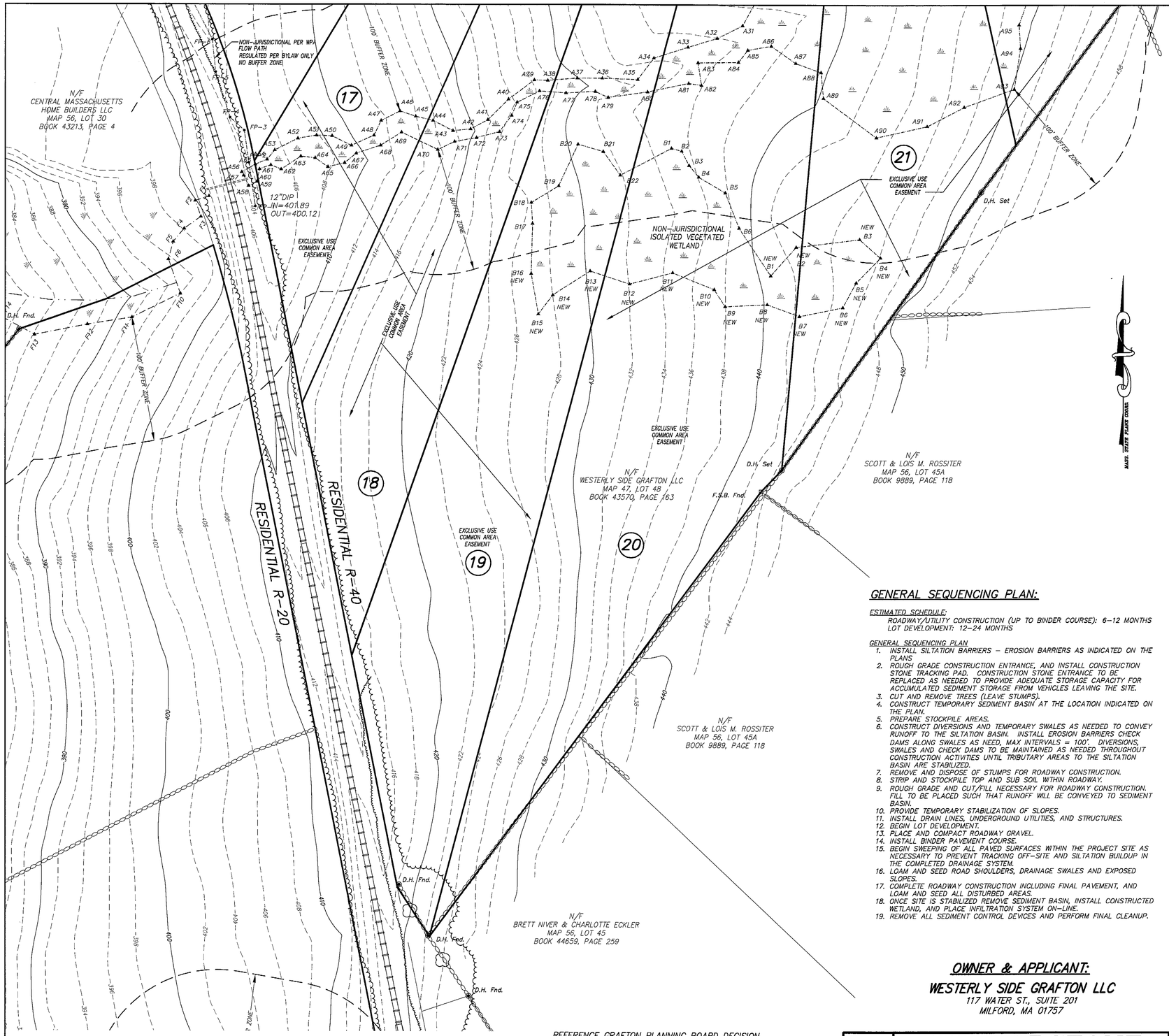

SOIL TEST LOGS

DTH-1+00
0-14" Ap SANDY LOAM 10YR3/3
14-32" Bw SANDY LOAM 10YR4/6
32-120" C1 SANDY LOAM 2.5Y5/3
NO GROUND WATER OR REFUSAL
MOTTLES AT 27"

DTH-3+00
0-8" Ap SANDY LOAM 10YR3/3
8-20" Bw SANDY LOAM 10YR4/6
20-36" C1 SANDY LOAM 2.5Y5/3
36-110" C2 SANDY LOAM 2.5Y5/4
NO GROUND WATER OR REFUSAL
MOTTLES AT 24"

DTH-5+00
0-12" Ap SANDY LOAM 10YR3/3
12-28" Bw SANDY LOAM 10YR4/6
28-120" C1 SANDY LOAM 2.5Y5/4
NO GROUND WATER OR REFUSAL
MOTTLES AT 24"

DTH-7+00
0-16" Ap SANDY LOAM 10YR3/3
16-32" Bw SANDY LOAM 10YR5/6
32-122" C1 SANDY LOAM 2.5Y5/3
WATER AT 120"
MOTTLES AT 32"

DTH-9+00
0-20" FILL
20-26" Ap SANDY LOAM 10YR3/3
26-40" Bw SANDY LOAM 10YR5/6
40-130" C1 SANDY LOAM 2.5Y5/3
WATER AT 128"
MOTTLES AT 40"

DTH-11+00
0-8" Ap SANDY LOAM 10YR3/3
8-22" Bw SANDY LOAM 10YR5/6
22-120" C1 SANDY LOAM 2.5Y5/3
NO GROUND WATER
REFUSAL/BOULDER AT 120"
MOTTLES AT 22"

DTH-13+00
0-8" Ap SANDY LOAM 10YR3/3
8-18" Bw SANDY LOAM 10YR5/6
18-120" C1 SANDY LOAM 2.5Y5/3
NO GROUND WATER OR REFUSAL
MOTTLES AT 18"

DTH-14+50
0-8" Ap SANDY LOAM 10YR3/3
8-24" Bw SANDY LOAM 10YR5/6
24-126" C1 SANDY LOAM 2.5Y5/3
NO GROUND WATER OR REFUSAL
MOTTLES AT 24"

DTH-16+50
0-10" Ap SANDY LOAM 10YR3/3
10-24" Bw SANDY LOAM 10YR5/6
24-130" C1 SANDY LOAM 2.5Y5/3
NO GROUND WATER OR REFUSAL
MOTTLES AT 24"

DTH-18+50
0-6" Ap SANDY LOAM 10YR3/3
6-20" Bw SANDY LOAM 10YR5/6
20-128" C1 SANDY LOAM 2.5Y5/3
NO GROUND WATER OR REFUSAL
MOTTLES AT 20"

DTH-A
0-14" Ap SANDY LOAM 10YR3/3
14-24" Bw SANDY LOAM 10YR5/6
24-102" C1 SANDY LOAM 2.5Y5/3
NO GROUND WATER OR REFUSAL
MOTTLES AT 32"

DTH-B
0-10" Ap SANDY LOAM 10YR3/3
10-28" Bw SANDY LOAM 10YR5/6
28-78" C1 SANDY LOAM 2.5Y5/3
NO GROUND WATER OR REFUSAL
MOTTLES AT 32"

PLAN BOOK 924 PLAN 15
SHEET 5 OF 11

APPROVAL UNDER THE SUBDIVISION CONTROL LAW, IS REQUIRED.
GRAFTON PLANNING BOARD

DATE: 12-12-16

COMMONWEALTH OF MASSACHUSETTS
VAROUJAN H. HAGOPIAN
No. 49665
PROFESSIONAL LAND SURVEYOR

I HEREBY CERTIFY THAT THIS PLAN WAS PREPARED IN CONFORMANCE WITH THE RULES AND REGULATIONS OF THE REGISTERS OF DEEDS.

10/26/16
VAROUJAN H. HAGOPIAN, P.L.S. 49665

EROSION AND SEDIMENTATION CONTROL NOTES:

1. ALL WORK SHALL BE IN ACCORDANCE WITH THE ORDER OF CONDITIONS ISSUED BY THE LOCAL CONSERVATION COMMISSION, AND THE PROJECT STORMWATER POLLUTION PREVENTION PLAN.

2. PRIOR TO INITIATING CONSTRUCTION, ALL SEDIMENTATION AND EROSION CONTROL MEASURES SHALL BE INSTALLED AS SHOWN ON THE PLANS AND DETAIL DRAWINGS.

3. THIS PLAN DEPICTS THE MINIMUM REQUIRED SEDIMENTATION AND EROSION CONTOLS. THE CONTRACTOR SHALL EMPLOY ADDITIONAL SEDIMENTATION AND EROSION CONTROL MEASURES AS NECESSITATED BY SITE CONDITIONS, OR AS DIRECTED BY THE OWNER, THE OWNER'S REPRESENTATIVE, OR THE CONSERVATION COMMISSION TO ENSURE PROTECTION OF ALL WETLAND RESOURCES AND CONTROL SEDIMENT TRANSPORT. IF SEDIMENTATION PLUMES OCCUR, THE CONTRACTOR SHALL STOP WORK AND INSTALL ADDITIONAL SEDIMENTATION CONTROL DEVICES IMMEDIATELY TO PREVENT FURTHER SEDIMENTATION.

4. THE CONTRACTOR SHALL BE RESPONSIBLE FOR MAINTAINING ALL TEMPORARY AND PERMANENT SEDIMENTATION AND EROSION CONTROLS UNTIL WORK IS COMPLETE AND ALL AREAS HAVE BEEN PERMANENTLY STABILIZED. AT SUCH TIME THE CONTRACTOR IS RESPONSIBLE FOR REMOVING ALL SEDIMENTATION AND EROSION CONTROL MEASURES.

5. THE CONTRACTOR SHALL INSPECT SEDIMENTATION AND EROSION CONTROLS ON A DAILY BASIS AND IMMEDIATELY AFTER EACH RAINFALL; REPAIRS SHALL BE MADE BY THE END OF THE WORKING DAY. ACCUMULATED SEDIMENT SHALL BE REMOVED AND DISPOSED OF BY THE CONTRACTOR WHEN THE VOLUME REACHES 1/4 TO 1/2 THE HEIGHT OF WEED FREE HAYBALE OR SEDIMENT TRAP, OR AS DIRECTED BY THE LOCAL AUTHORITY.

6. SOIL STOCKPILES SHALL BE STABILIZED TO PREVENT EROSION, AND A PERIMETER SEDIMENT CONTROL BARRIER SHALL BE INSTALLED. NO MATERIALS SUBJECT TO EROSION SHALL BE STOCKPILED OVERNIGHT WITHIN 100 FEET OF A WETLAND UNLESS COVERED.

7. TOPSOIL STOCKPILES AND DISTURBED PORTIONS OF THE SITE WHERE CONSTRUCTION ACTIVITY TEMPORARILY CEASES FOR AT LEAST 7 DAYS WILL BE STABILIZED WITH A TEMPORARY SEED AND MULCH NO LATER THAN 7 DAYS FROM THE LAST CONSTRUCTION ACTIVITY IN THAT AREA. THE TEMPORARY SEED SHALL BE EROSION CONTROL MIX. DISTURBED PORTIONS OF THE SITE WHERE FINAL GRADE HAS BEEN MET AND CONSTRUCTION ACTIVITY CEASES SHALL BE STABILIZED WITH PERMANENT SEED NO LATER THAN 7 DAYS AFTER THE LAST CONSTRUCTION ACTIVITY. THE PERMANENT SEED MIX CONSISTS OF TALL FESCUE, AND ANNUAL RYE. PRIOR TO SEEDING, GROUND AGRICULTURAL LIMESTONE SHALL BE APPLIED AS REQUIRED. SEEDING SHALL BE NUTRIENT ENRICHED HYDROSEED WITH TACKIFERS AND CELLULOSE OR OTHER DEGRADABLE FIBERS CAPABLE OF RETAINING MOISTURE. IF NOT DURING THE GROWING SEASON, THESE AREAS SHALL BE MULCHED WITH HAY AND SECURED.

8. DEWATERING OPERATIONS, IF REQUIRED, SHALL DISCHARGE ONTO STABILIZED AREAS, AND ALL DISCHARGE WATER IS TO PASS THROUGH SEDIMENTATION CONTROL DEVICES TO PREVENT IMPACTS UPON WATER BODIES, BORDERING VEGETATED WETLANDS, DRAINAGE SYSTEMS AND ABUTTING PROPERTIES. AT A MINIMUM ALL DISCHARGES SHALL BE INTERCEPTED BY HAYBALE CORRAL AND HAYBALE CHECK DAMS SPACED 10' APART.

9. STAKED WEED FREE STRAW OF HAY BALES AND SILT FENCE SHALL BE INSTALLED ALONG THE EDGE OF PROPOSED DEVELOPMENT OR AS INDICATED ON THE PLANS. ADDITIONAL WEED FREE BALES AND SILT FENCE SHALL BE LOCATED AS CONDITIONS WARRANT, AND IN SOME AREAS WEED FREE BALE/SILT FENCING STRUCTURES MAY HAVE TO BE DUPLICATED AT REGULAR INTERVALS UP GRADIENT OF WETLANDS.

10. STREET SWEEPING IN THE VICINITY OF THE PROJECT AREA SHALL BE PERFORMED AS NEEDED UNTIL THE PROJECT LIMITS HAVE BEEN STABILIZED. ALL SEDIMENT TRACKED ONTO PUBLIC RIGHT-OF-WAYS SHALL BE SWEPT AT THE END OF EACH WORKING DAY.

11. ALL EXISTING AND PROPOSED DRAINAGE SYSTEM INLETS, WHICH MAY RECEIVE STORMWATER FLOW FROM DISTURBED AREAS, SHALL BE PROVIDED WITH INLET PROTECTION (CATCH BASIN INSERTS, STREAMGUARD - MODEL 3003, OR APPROVED EQUAL). THE CONTRACTOR SHALL MAINTAIN THESE DEVICES PER THE MANUFACTURERS RECOMMENDATIONS UNTIL ALL WORK IS COMPLETED AND ALL AREAS HAVE BEEN ADEQUATELY STABILIZED.

12. DUST CONTROL MEASURES SHALL BE IMPLEMENTED AND MAINTAINED PROPERLY THROUGHOUT DRY WEATHER PERIODS UNTIL ALL DISTURBED AREAS HAVE BEEN PERMANENTLY STABILIZED. METHODS FOR DUST CONTROL SHALL INCLUDE WATER SPRINKLING AND/OR OTHER METHODS APPROVED BY THE ENGINEER.

13. ALL VEHICLES SHALL ENTER AND EXIT THE SIT VIA THE STABILIZED CONSTRUCTION ENTRANCE CONSISTING OF 2" TO 3" INCH CRUSHED STONE TO A DEPTH OF 6" FOR A MINIMUM OF THE FIRST 50 FEET FROM EXISTING PAVED STREETS. EXTEND THE PAD BEYOND 50 FEET AS NECESSARY BASED UPON FIELD CONDITIONS. IF THE SITE CONDITIONS ARE SUCH THAT THE GRAVEL PAD DOES NOT REMOVE THE MAJORITY OF THE MUD AND DEBRIS, THEN THE TIRES SHALL BE WASHED BEFORE ANY VEHICLES ENTER ADJACENT ROADWAYS. ALL WATER USED FOR TIRE WASHING SHALL BE COLLECTED AND TREATED PRIOR TO ENTERING THE DRAINAGE SYSTEM. THE CONTRACTOR SHALL INSPECT THE CONSTRUCTION ENTRANCE DAILY AND AFTER HEAVY USE.

14. EQUIPMENT NOT IN USE SHALL NOT BE PARKED WITHIN WETLANDS OR BUFFER AREAS.

COMMONWEALTH OF MASSACHUSETTS
VITO COLONNA
CIVIL
No. 47635
REGISTERED PROFESSIONAL ENGINEER

10.26.16

GENERAL SEQUENCING PLAN:

ESTIMATED SCHEDULE:
ROADWAY/UTILITY CONSTRUCTION (UP TO BINDER COURSE): 6-12 MONTHS
LOT DEVELOPMENT: 12-24 MONTHS

GENERAL SEQUENCING PLAN

1. INSTALL SILTATION BARRIERS - EROSION BARRIERS AS INDICATED ON THE PLANS
2. ROUGH GRADE CONSTRUCTION ENTRANCE, AND INSTALL CONSTRUCTION STONE TRACKING PAD. CONSTRUCTION STONE ENTRANCE TO BE REPLACED AS NEEDED TO PROVIDE ADEQUATE STORAGE CAPACITY FOR ACCUMULATED SEDIMENT STORAGE FROM VEHICLES LEAVING THE SITE.
3. CUT AND REMOVE TREES (LEAVE STUMPS).
4. CONSTRUCT TEMPORARY SEDIMENT BASIN AT THE LOCATION INDICATED ON THE PLAN.
5. PREPARE STOCKPILE AREAS.
6. CONSTRUCT DIVERSIONS AND TEMPORARY SWALES AS NEEDED TO CONVEY RUNOFF TO THE SILTATION BASIN. INSTALL EROSION BARRIERS CHECK DAMS ALONG SWALES AS NEED, MAX INTERVALS = 100'. DIVERSIONS, SWALES AND CHECK DAMS TO BE MAINTAINED AS NEEDED THROUGHOUT CONSTRUCTION ACTIVITIES UNTIL TRIBUTARY AREAS TO THE SILTATION BASIN ARE STABILIZED.
7. REMOVE AND DISPOSE OF STUMPS FOR ROADWAY CONSTRUCTION.
8. STRIP AND STOCKPILE TOP AND SUB SOIL WITHIN ROADWAY.
9. ROUGH GRADE AND CUT/FILL NECESSARY FOR ROADWAY CONSTRUCTION. FILL TO BE PLACED SUCH THAT RUNOFF WILL BE CONVEYED TO SEDIMENT BASIN.
10. PROVIDE TEMPORARY STABILIZATION OF SLOPES.
11. INSTALL DRAIN LINES, UNDERGROUND UTILITIES, AND STRUCTURES.
12. BEGIN LOT DEVELOPMENT.
13. PLACE AND COMPACT ROADWAY GRAVEL.
14. INSTALL BINDER PAVEMENT COURSE.
15. BEGIN SWEEPING OF ALL PAVED SURFACES WITHIN THE PROJECT SITE AS NECESSARY TO PREVENT TRACKING OFF-SITE AND SILTATION BUILDUP IN THE COMPLETED DRAINAGE SYSTEM.
16. LOAM AND SEED ROAD SHOULDERS, DRAINAGE SWALES AND EXPOSED SLOPES.
17. COMPLETE ROADWAY CONSTRUCTION INCLUDING FINAL PAVEMENT, AND LOAM AND SEED ALL DISTURBED AREAS.
18. ONCE SITE IS STABILIZED REMOVE SEDIMENT BASIN, INSTALL CONSTRUCTED WETLAND, AND PLACE INFILTRATION SYSTEM ON-LINE.
19. REMOVE ALL SEDIMENT CONTROL DEVICES AND PERFORM FINAL CLEANUP.

OWNER & APPLICANT:

WESTERLY SIDE GRAFTON LLC
117 WATER ST., SUITE 201
MILFORD, MA 01757

I, Diane M. Tiusanen CLERK OF THE TOWN OF GRAFTON RECEIVED AND RECORDED APPROVAL FROM THE PLANNING BOARD OF THIS PLAN ON Feb 10, 2016 AND NO APPEAL WAS TAKEN FOR TWENTY (20) DAYS THEREAFTER.

REFERENCE GRAFTON PLANNING BOARD DECISION WORCESTER REGISTRY OF DEEDS BOOK 56093, PAGE 26.

SEE CONDITIONS OF APPROVAL LISTED ON SHEET 6 OF 6.

GRAPHIC SCALE: 1"=40'
0 10 20 30 40 50 75 100 150 200 FEET
0 5 10 15 20 30 40 50 60 METERS

CONNORSTONE
CONSULTING CIVIL ENGINEERS
AND LAND SURVEYORS
10 SOUTHWEST CUTOFF, SUITE 7
NORTHBOROUGH, MASSACHUSETTS 01532
PHONE: (508)-393-9727 FAX: (508)-393-5242

DESIGNED BY:	VC, REM
CHECKED BY:	VC
COMPUTED BY:	
FIELD SURVEY:	VHH
DRAWN BY:	REM
SCALE:	1" = 40'
SHEET	5 OF 11

MODIFIED DEFINITIVE SUBDIVISION PLAN

TOPOGRAPHIC PLAN OF GRAFTON HILL IN GRAFTON, MA

REVISIONS
10/26/2016
6/28/2016
1/8/2016
12/28/2015
11/23/2015
SEPTEMBER 30, 2015

PLAN BOOK 924 PLAN 15
SHEET 6 OF 11

I HEREBY CERTIFY THAT THIS PLAN WAS PREPARED IN CONFORMANCE WITH THE RULES AND REGULATIONS OF THE REGISTERS OF DEEDS.

10/26/16
VAROUJAN H. HAGOPIAN, P.L.S. 49665

COMMONWEALTH OF MASSACHUSETTS
VAROUJAN H. HAGOPIAN
No. 49665
REGISTERED PROFESSIONAL LAND SURVEYOR

I, Denise M. Durand CLERK OF THE TOWN OF GRAFTON RECEIVED AND RECORDED APPROVAL FROM THE PLANNING BOARD OF THIS PLAN ON Feb. 10, 2016 AND NO APPEAL WAS TAKEN FOR TWENTY (20) DAYS THEREAFTER.

REFERENCE GRAFTON PLANNING BOARD DECISION WORCESTER REGISTRY OF DEEDS BOOK 56093, PAGE 26.

SEE CONDITIONS OF APPROVAL LISTED ON SHEET 6 OF 6.

APPROVAL UNDER THE SUBDIVISION CONTROL LAW, IS REQUIRED.
GRAFTON PLANNING BOARD

DATE: 12-12-2016

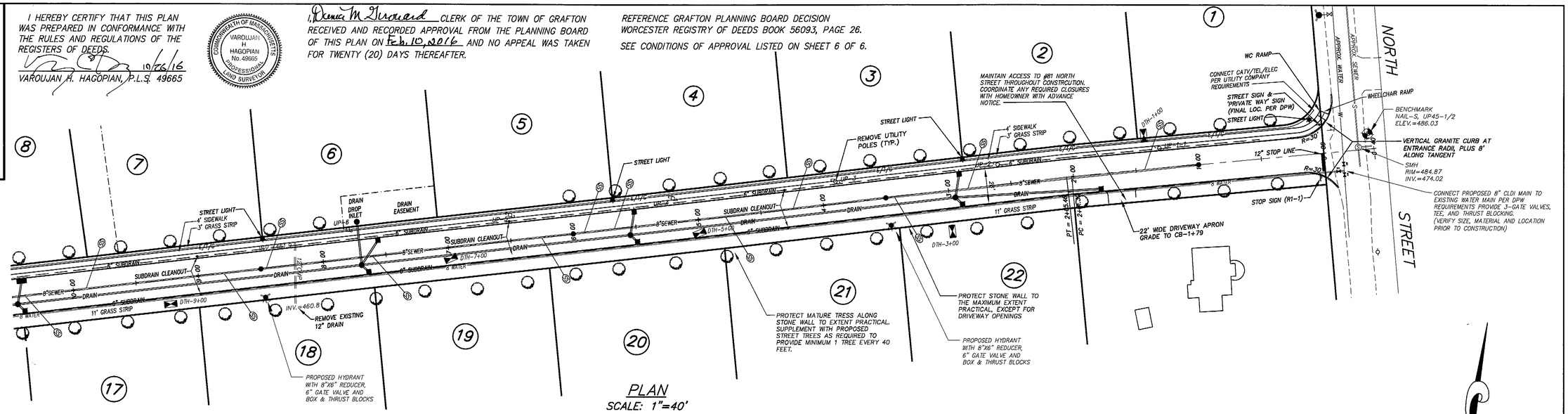

PLAN
SCALE: 1"=40'

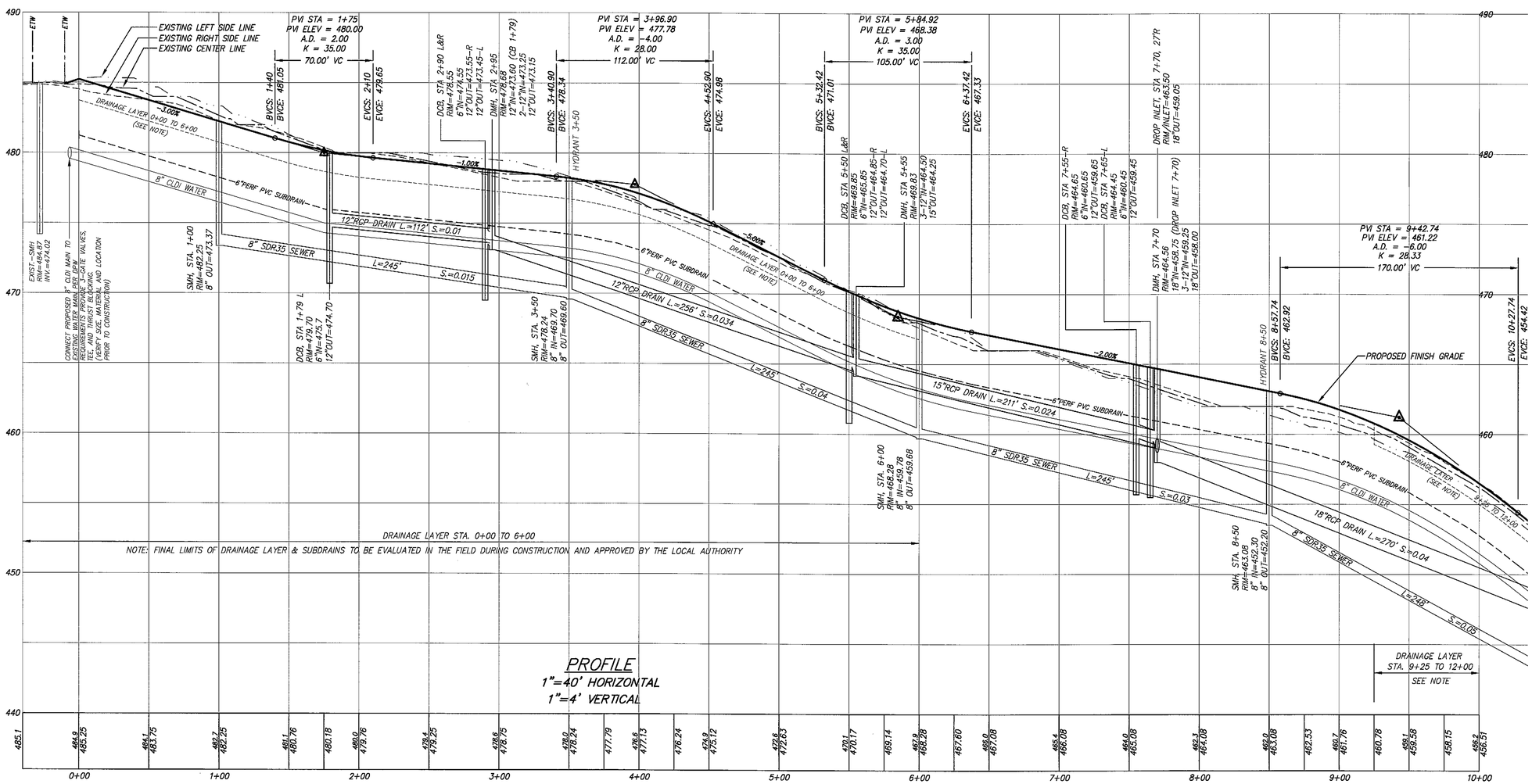

PROFILE
1"=40' HORIZONTAL
1"=4' VERTICAL

COMMONWEALTH OF MASSACHUSETTS
VITO COLONNA
CIVIL
No. 47635
REGISTERED PROFESSIONAL ENGINEER
10.26.16

OWNER & APPLICANT:
WESTERLY SIDE GRAFTON LLC
117 WATER ST., SUITE 201
MILFORD, MA 01757

MODIFIED DEFINITIVE SUBDIVISION PLAN

ROADWAY PLAN & PROFILE OF GRAFTON HILL IN GRAFTON, MA

CONNORSTONE
CONSULTING CIVIL ENGINEERS AND LAND SURVEYORS
10 SOUTHWEST CUTOFF, SUITE 7
NORTHBOROUGH, MASSACHUSETTS 01532
PHONE: (508)-393-9727 FAX: (508)-393-5242

DESIGNED BY: VC, REM	
CHECKED BY: VC	10/26/2016
COMPUTED BY:	6/28/2016
FIELD SURVEY: VHH	1/8/2016
DRAWN BY: REM	12/28/2015
SCALE: AS SHOWN	11/23/2015
	REVISIONS
SHEET 6 OF 11.	SEPTEMBER 30, 2015

PLAN BOOK 924 PLAN 15
SHEET 7 OF 11

I, Donna M. Girouard CLERK OF THE TOWN OF GRAFTON RECEIVED AND RECORDED APPROVAL FROM THE PLANNING BOARD OF THIS PLAN ON Feb. 10, 2016 AND NO APPEAL WAS TAKEN FOR TWENTY (20) DAYS THEREAFTER.

I HEREBY CERTIFY THAT THIS PLAN WAS PREPARED IN CONFORMANCE WITH THE RULES AND REGULATIONS OF THE REGISTERS OF DEEDS.

10/26/16
VAROUJAN H. HAGOPIAN, P.L.S. 49665

COMMONWEALTH OF MASSACHUSETTS
VAROUJAN H. HAGOPIAN
No. 49665
PROFESSIONAL LAND SURVEYOR

APPROVAL UNDER THE SUBDIVISION CONTROL LAW, IS REQUIRED.
GRAFTON PLANNING BOARD

DATE:

REFERENCE GRAFTON PLANNING BOARD DECISION
WORCESTER REGISTRY OF DEEDS BOOK 56093, PAGE 26.
SEE CONDITIONS OF APPROVAL LISTED ON SHEET 6 OF 6.

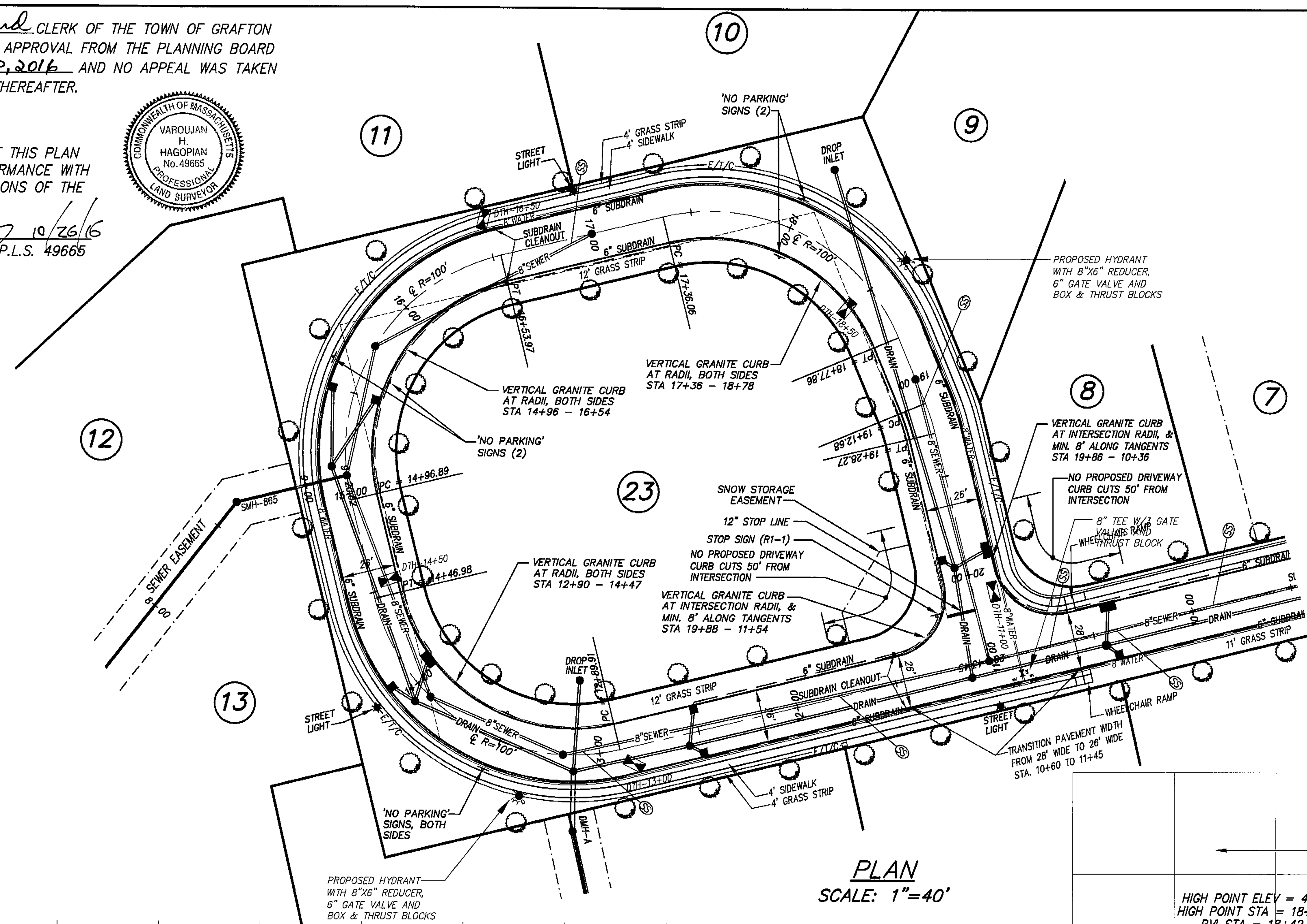

PLAN
SCALE: 1"=40'

MASS. STATE PLANE COORD.

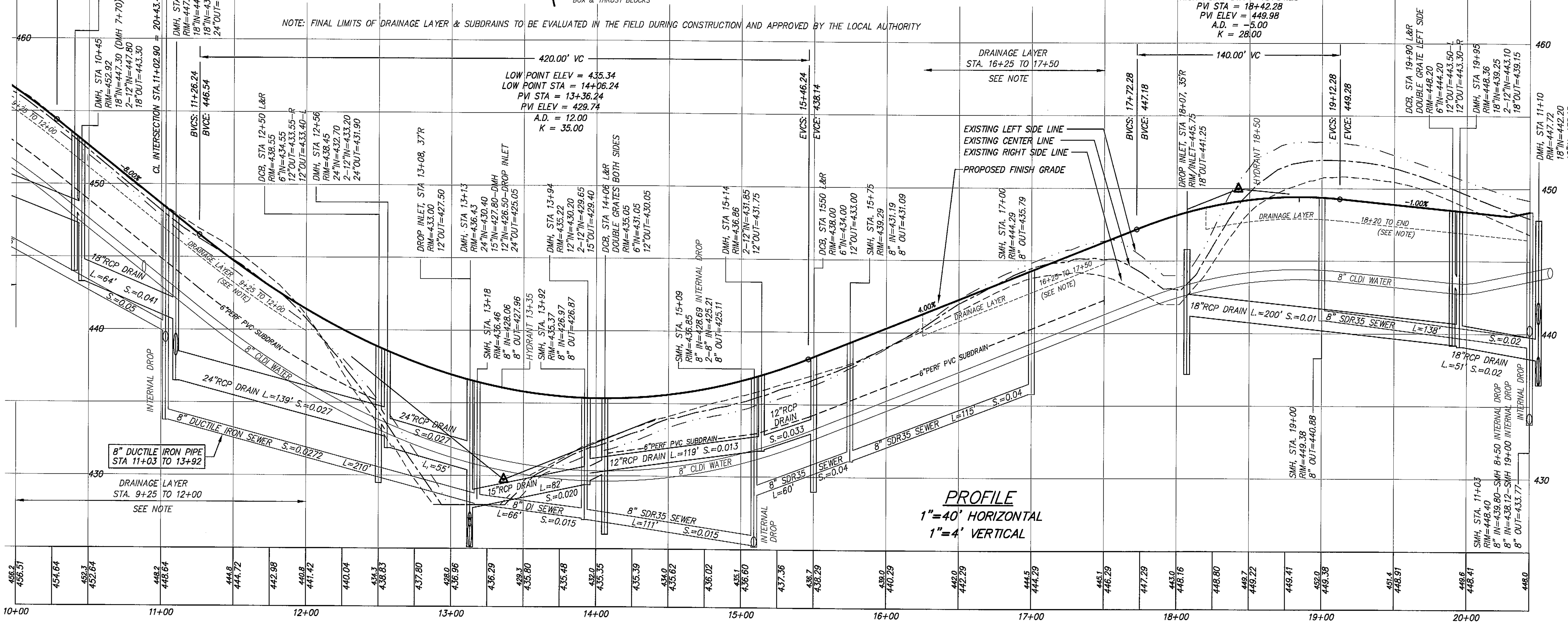

PROFILE
1"=40' HORIZONTAL
1"=4' VERTICAL

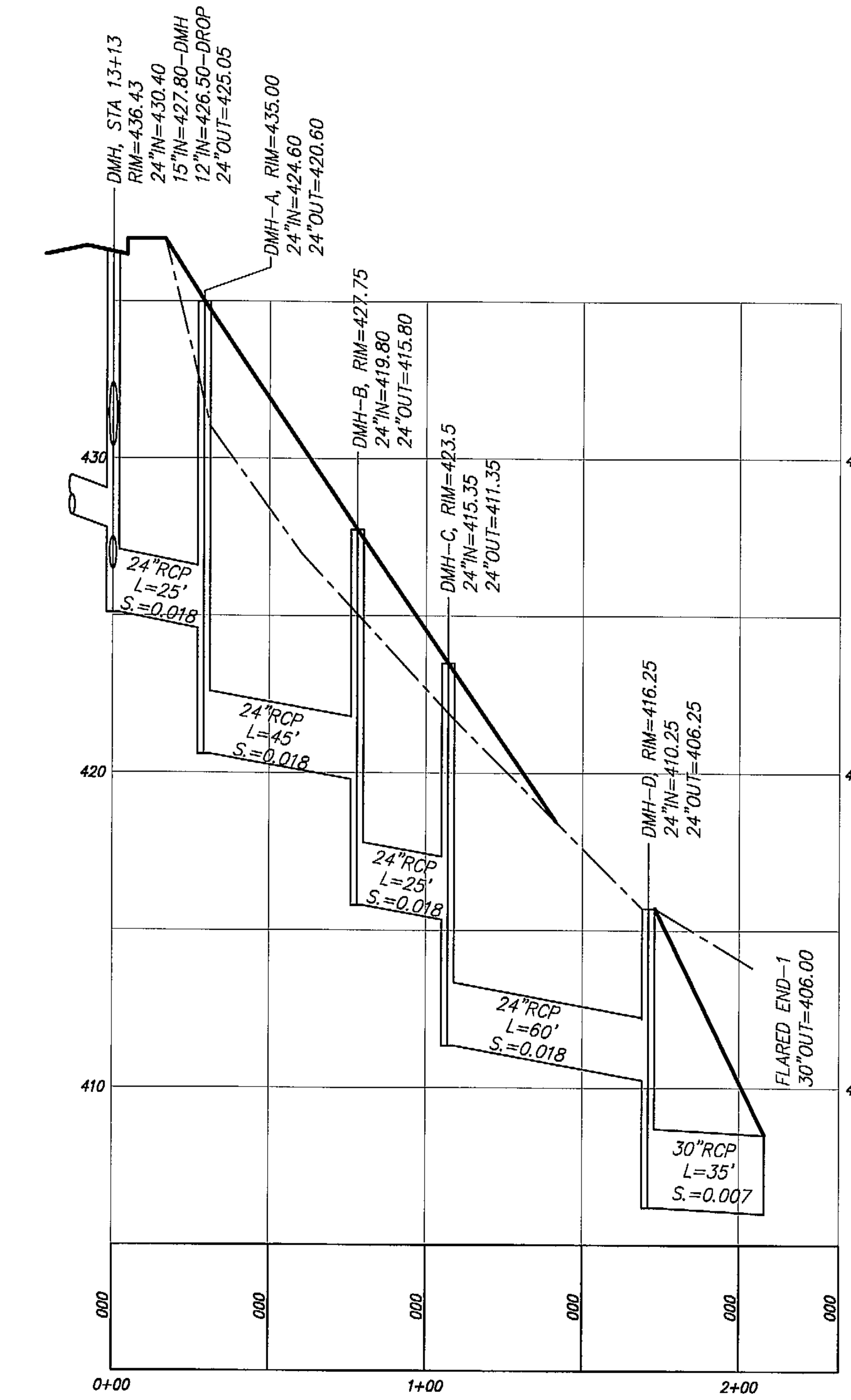

DRAIN PROFILE
1"=40' HORIZONTAL
1"=4' VERTICAL

COMMONWEALTH OF MASSACHUSETTS
VITO COLONNA
CIVIL
No. 47635
REGISTERED PROFESSIONAL ENGINEER
10.26.16

OWNER & APPLICANT:
WESTERLY SIDE GRAFTON LLC
117 WATER ST., SUITE 201
MILFORD, MA 01757

MODIFIED DEFINITIVE SUBDIVISION PLAN

ROADWAY PLAN & PROFILE
OF
GRAFTON HILL
IN
GRAFTON, MA

CONNORSTONE
CONSULTING CIVIL ENGINEERS
AND LAND SURVEYORS
10 SOUTHWEST CUTOFF, SUITE 7
NORTHBOROUGH, MASSACHUSETTS 01532
PHONE: (508)–393–9727 FAX: (508)–393–5242

DESIGNED BY: VC, REM	
CHECKED BY: VC	10/26/2016
COMPUTED BY:	6/28/2016
FIELD SURVEY: VHH	1/8/2016
DRAWN BY: REM	12/28/2015
SCALE: AS SHOWN	11/23/2015
	REVISIONS
SHEET 7 OF 11	SEPTEMBER 30, 2015

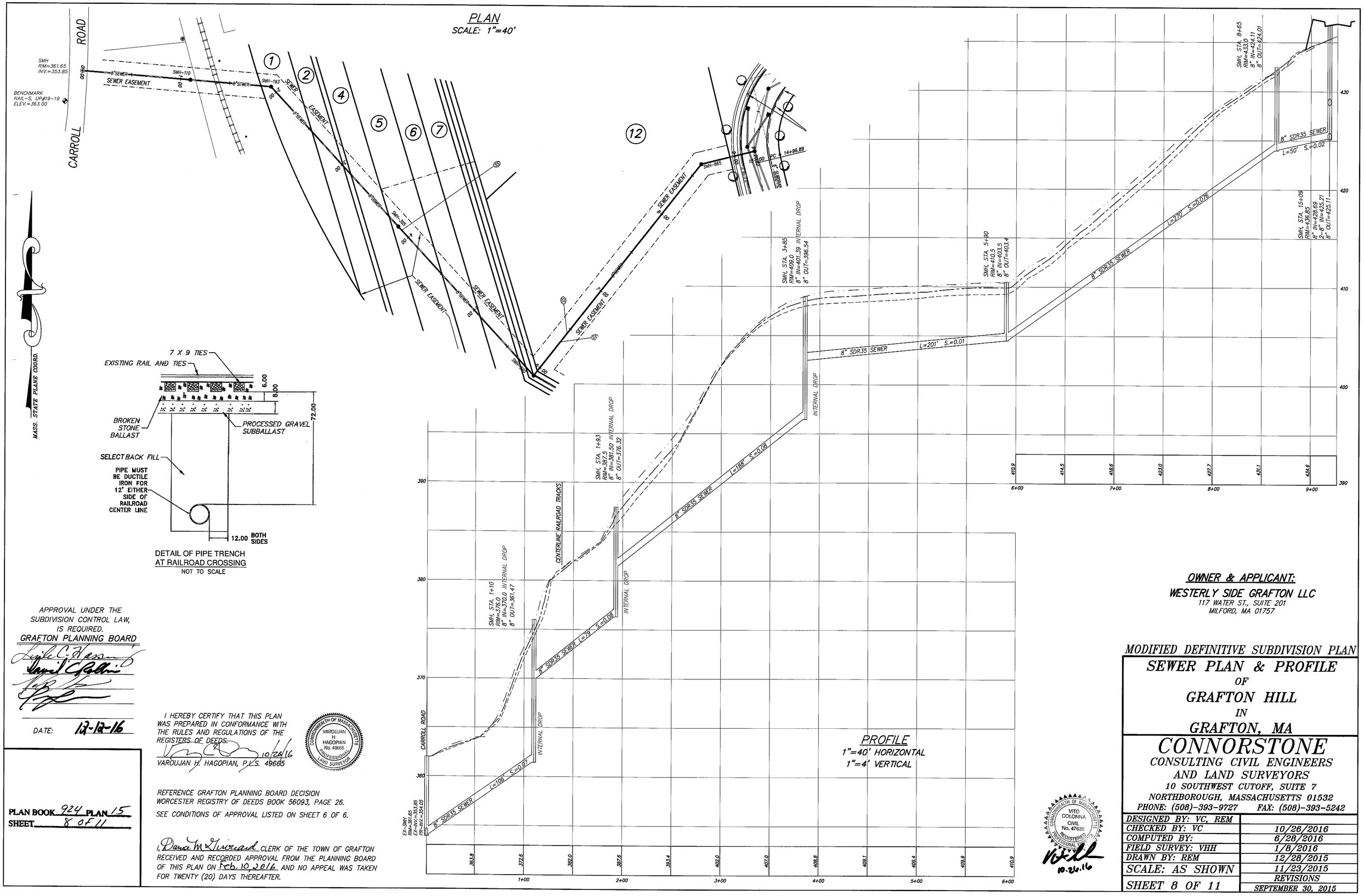

APPROVAL UNDER THE SUBDIVISION CONTROL LAW, IS REQUIRED.
GRAFTON PLANNING BOARD

DATE: 12-12-16

I HEREBY CERTIFY THAT THIS PLAN WAS PREPARED IN CONFORMANCE WITH THE RULES AND REGULATIONS OF THE REGISTERS OF DEEDS.

10/26/16
VAROUJAN H. HAGOPIAN, P.L.S. 49665

COMMONWEALTH OF MASSACHUSETTS
VAROUJAN H. HAGOPIAN
No. 49665
PROFESSIONAL LAND SURVEYOR

REFERENCE GRAFTON PLANNING BOARD DECISION WORCESTER REGISTRY OF DEEDS BOOK 56093, PAGE 26.

SEE CONDITIONS OF APPROVAL LISTED ON SHEET 6 OF 6.

I, Diane M. Fitzgerald CLERK OF THE TOWN OF GRAFTON RECEIVED AND RECORDED APPROVAL FROM THE PLANNING BOARD OF THIS PLAN ON Feb. 10, 2016 AND NO APPEAL WAS TAKEN FOR TWENTY (20) DAYS THEREAFTER.

PLAN BOOK 924 PLAN 15
SHEET 8 OF 11

COMMONWEALTH OF MASSACHUSETTS
VITO COLONNA
CIVIL
No. 47635
REGISTERED PROFESSIONAL ENGINEER

10-26-16

OWNER & APPLICANT:
WESTERLY SIDE GRAFTON LLC
117 WATER ST., SUITE 201
MILFORD, MA 01757

MODIFIED DEFINITIVE SUBDIVISION PLAN

SEWER PLAN & PROFILE
OF
GRAFTON HILL
IN
GRAFTON, MA

CONNORSTONE
CONSULTING CIVIL ENGINEERS
AND LAND SURVEYORS
10 SOUTHWEST CUTOFF, SUITE 7
NORTHBOROUGH, MASSACHUSETTS 01532
PHONE: (508)-393-9727 FAX: (508)-393-5242

DESIGNED BY: VC, REM	
CHECKED BY: VC	10/26/2016
COMPUTED BY:	6/28/2016
FIELD SURVEY: VHH	1/8/2016
DRAWN BY: REM	12/28/2015
SCALE: AS SHOWN	11/23/2015
	REVISIONS
SHEET 8 OF 11	SEPTEMBER 30, 2015

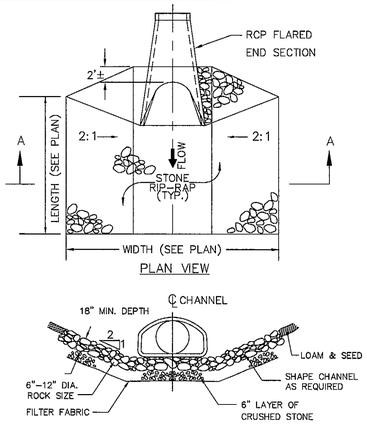

RIP-RAP APRON

NOT TO SCALE

TRENCH WIDTH (W)		
D DIAMETER OF PIPE	W UNSHEETED	W SHEETED
TO 12"	3'	4'
14" TO 24"	4'	5'
30" TO 36"	5'	6'

PROVIDE DETECTABLE WARNING TAPE OVER ALL SEWER LINES, FORCE MAINS, AND SEWER SERVICES.

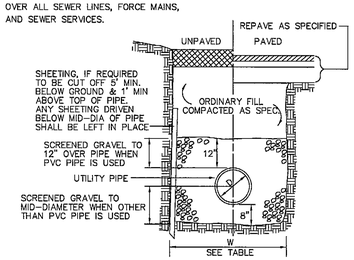

TYPICAL TRENCH SECTION

NOT TO SCALE

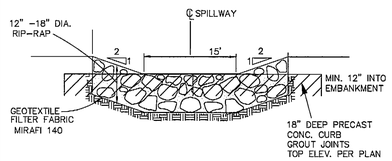

EMERGENCY SPILLWAY / RIP RAP SWALE DETAIL

NOT TO SCALE

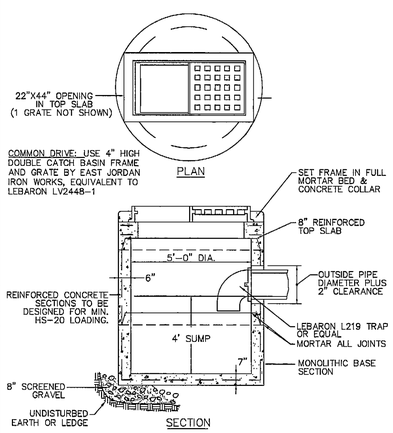

DOUBLE GRATE CATCH BASIN

WITH TRAP
NOT TO SCALE

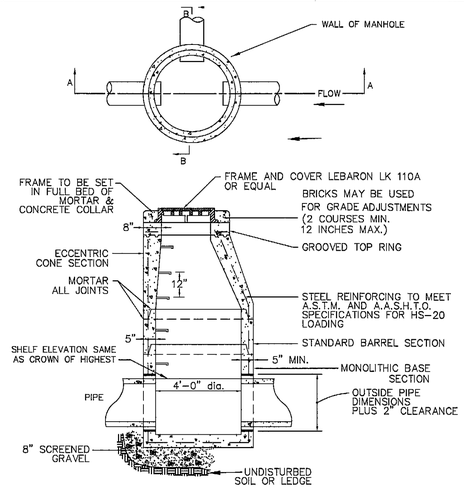

PRECAST CONCRETE DRAIN MANHOLE

NOT TO SCALE

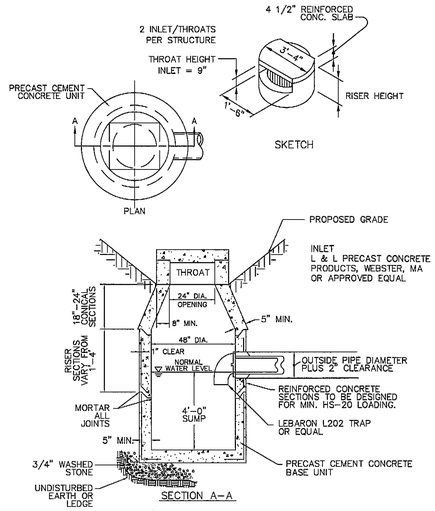

PRECAST CONCRETE DROP INLET

NOT TO SCALE

SUBDRAIN DETAIL

NOT TO SCALE

CLEANOUT DETAIL

NOT TO SCALE

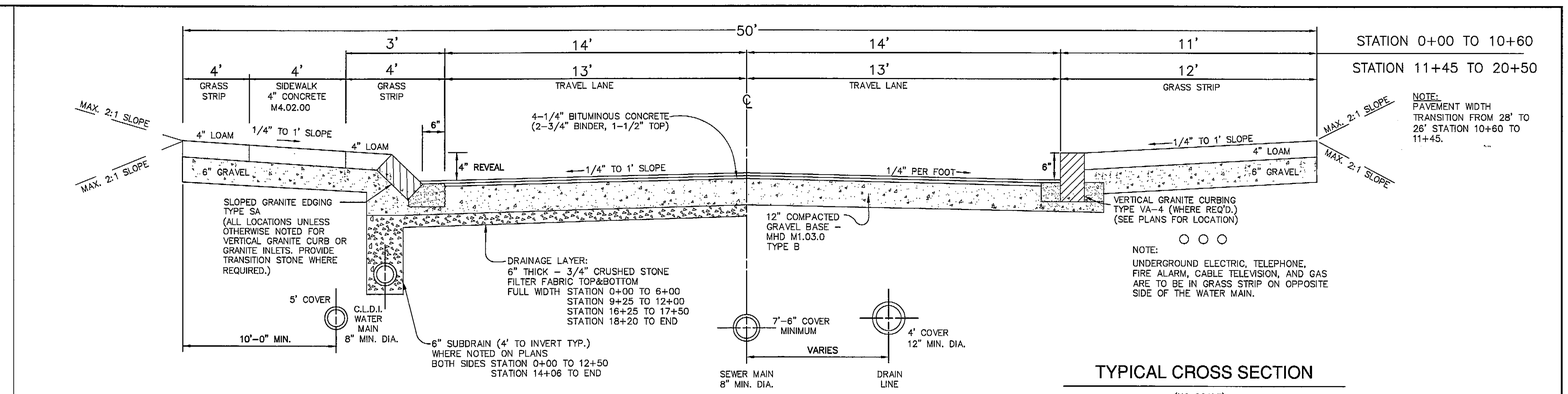

TYPICAL CROSS SECTION

(NO SCALE)

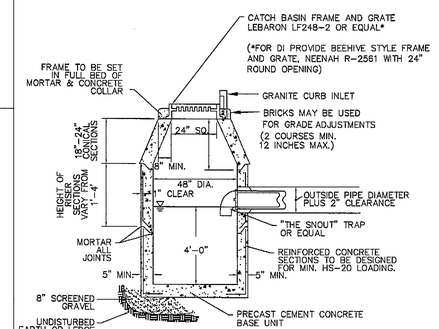

PRECAST CONCRETE CATCH BASIN

NOT TO SCALE

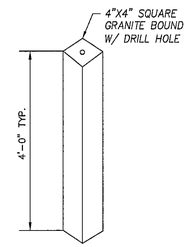

GRANITE BOUND DETAIL

NOT TO SCALE

1. SET 1" ABOVE FINISH GRADE.

2. A CLEARANCE OF AT LEAST THREE FEET (3') FROM A BOUND POINT SHALL BE PROVIDED TO PERMIT FREE USE OF THE BOUND BOTH LATERALLY AND ALONG SIDELINES

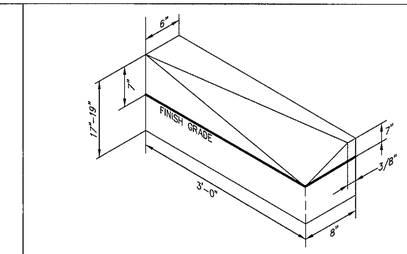

TRANSITION STONE CURB INLET TO MODIFIED BERM

NOT TO SCALE

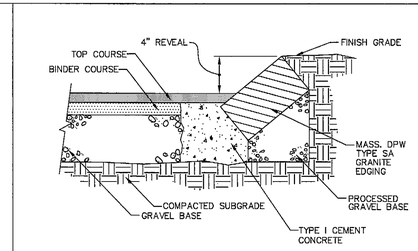

SLOPED GRANITE EDGING

NOT TO SCALE

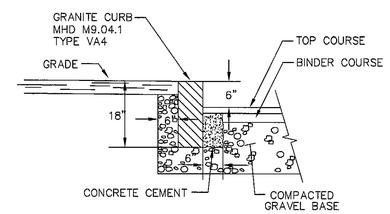

VERTICAL GRANITE CURB

NOT TO SCALE

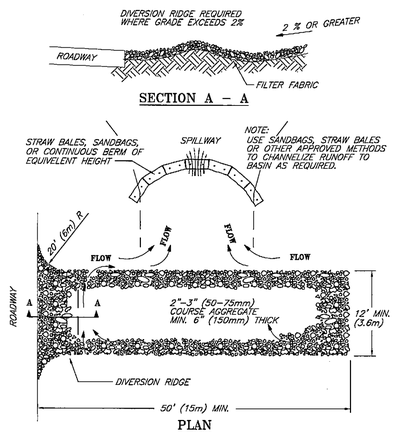

NOTES:
1. THE ENTRANCE SHALL BE MAINTAINED IN A CONDITION THAT WILL PREVENT TRACKING OR FLOWING OF SEDIMENT ONTO PUBLIC RIGHT-OF-WAYS. THIS MAY REQUIRE TOP DRESSING, REPAIR AND/OR CLEANOUT OF ANY MEASURES USED TO TRAP SEDIMENT.
2. WHEN NECESSARY, WHEELS SHALL BE CLEANED PRIOR TO ENTRANCE ONTO PUBLIC RIGHT-OF-WAY.
3. WHEN WASHING IS REQUIRED, IT SHALL BE DONE ON AN AREA STABLIZED WITH CRUSHED STONE THAT DRAINS INTO AN APPROVED SEDIMENT TRAP OR SEDIMENT BASIN.

TEMPORARY GRAVEL CONSTRUCTION ENTRANCE/EXIT

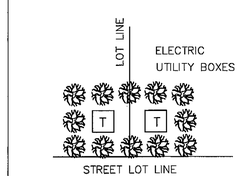

EVERGREEN SCREENING AROUND UTILITY BOXES (MIN. 18" HIGHT AT PLANTING)

UTILITY SCREEN DETAIL

NOT TO SCALE

I HEREBY CERTIFY THAT THIS PLAN WAS PREPARED IN CONFORMANCE WITH THE RULES AND REGULATIONS OF THE REGISTERS OF DEEDS.

10/26/16

VAROUJAN H. HAGOPIAN, P.L.S. 49865

COMMONWEALTH OF MASSACHUSETTS
VAROUJAN H. HAGOPIAN
No. 49865
PROFESSIONAL LAND SURVEYOR

COMMONWEALTH OF MASSACHUSETTS
VITO COLONNA
CIVIL
No. 47635
REGISTERED PROFESSIONAL ENGINEER
10.26.16

REFERENCE GRAFTON PLANNING BOARD DECISION WORCESTER REGISTRY OF DEEDS BOOK 56093, PAGE 26.

SEE CONDITIONS OF APPROVAL LISTED ON SHEET 6 OF 6.

I, _____ CLERK OF THE TOWN OF GRAFTON RECEIVED AND RECORDED APPROVAL FROM THE PLANNING BOARD OF THIS PLAN ON _____ AND NO APPEAL WAS TAKEN FOR TWENTY (20) DAYS THEREAFTER.

PLAN BOOK 824 PLAN 15
SHEET 9 OF 11

APPROVAL UNDER THE SUBDIVISION CONTROL LAW, IS REQUIRED.
GRAFTON PLANNING BOARD

DATE: 12-12-16

OWNER & APPLICANT:
WESTERLY SIDE GRAFTON LLC
117 WATER ST., SUITE 201
MILFORD, MA 01757

MODIFIED DEFINITIVE SUBDIVISION PLAN

CONNORSTONE
CONSULTING CIVIL ENGINEERS AND LAND SURVEYORS
10 SOUTHWEST CUTOFF, SUITE 7
NORTHBOROUGH, MASSACHUSETTS 01532
PHONE: (508)-393-9727 FAX: (508)-393-5242

DESIGNED BY: VC, REM	
CHECKED BY: VC	10/26/2016
COMPUTED BY:	6/28/2016
FIELD SURVEY:	1/8/2016
DRAWN BY: REM	12/28/2015
SCALE: NONE	11/23/2015
SHEET 9 OF 11	REVISIONS
	SEPTEMBER 30, 2015

CONSTRUCTION DETAILS OF GRAFTON HILL IN GRAFTON, MA

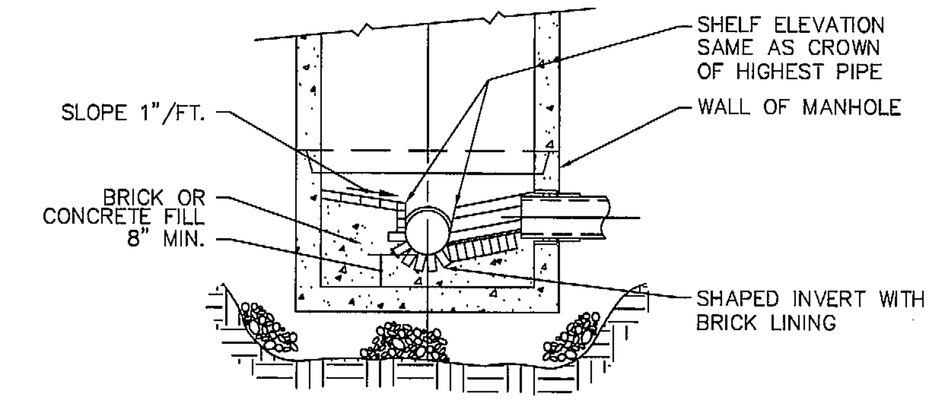

SECTION B-B
NOT TO SCALE

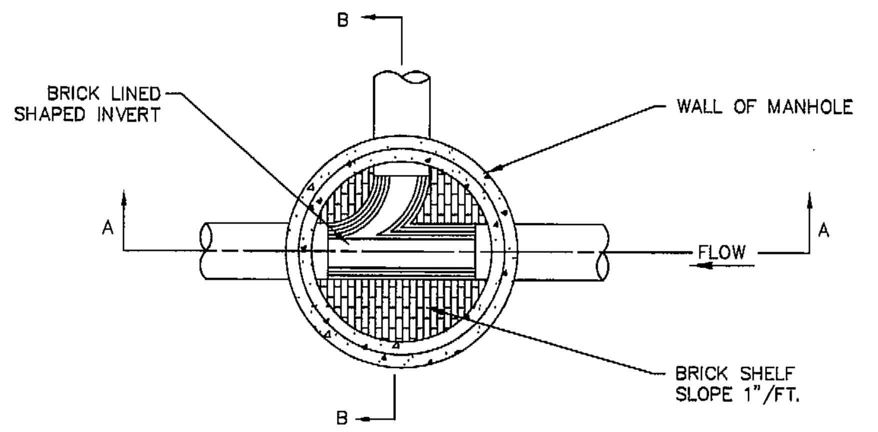

PLAN

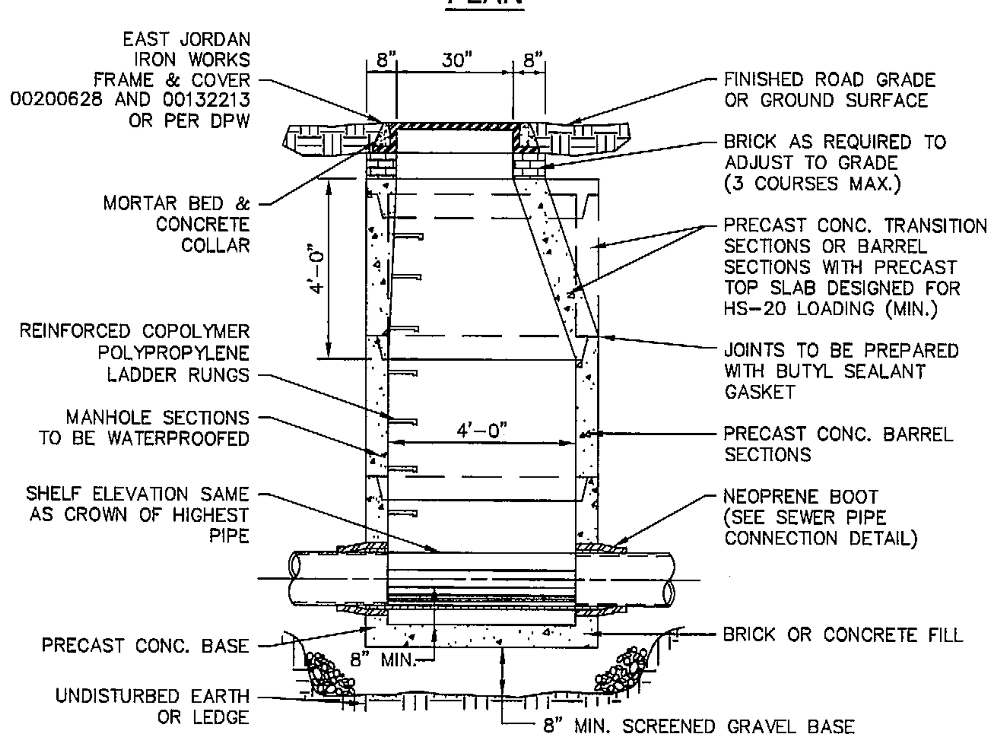

SECTION A-A

TYPICAL PRECAST SEWER MANHOLE
WITH PRECAST BASE
NOT TO SCALE

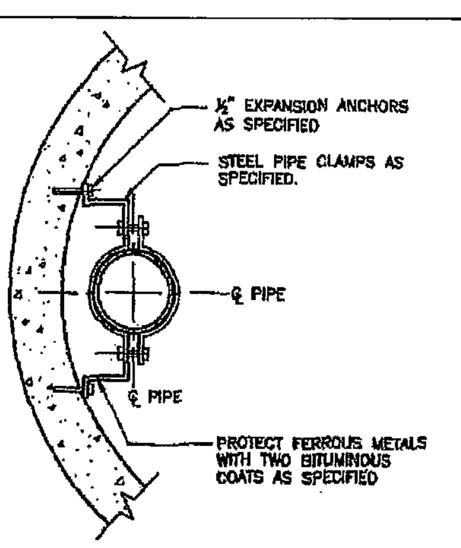

SECTION C-C

PVC DROP CONNECTION ANCHOR DETAIL
NTS

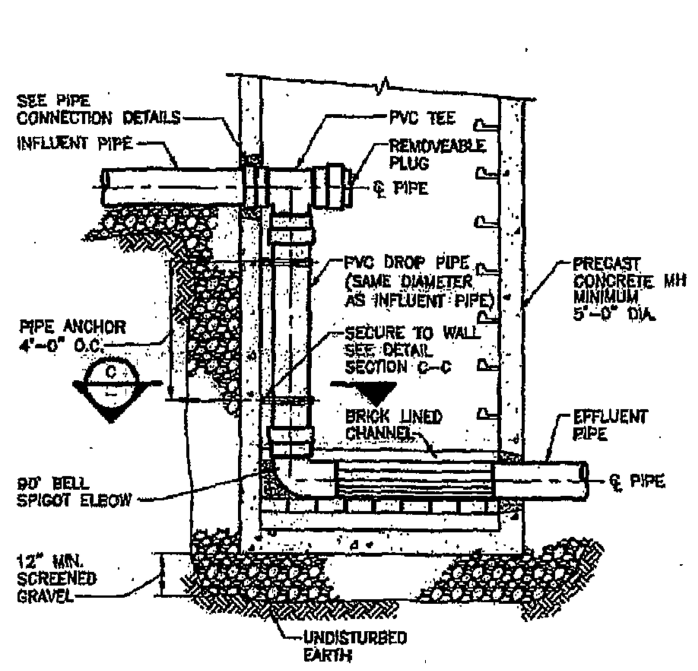

INTERNAL DROP SEWER MANHOLE DETAIL
NOT TO SCALE

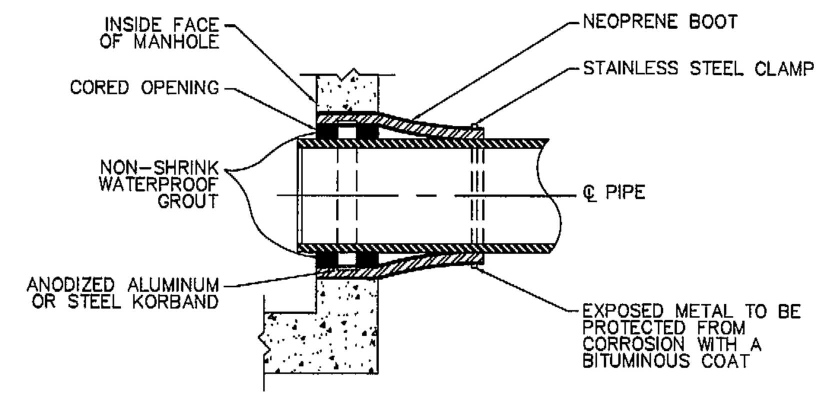

SEWER PIPE CONNECTION DETAIL
USING NEOPRENE BOOT IN CORED HOLE
NOT TO SCALE

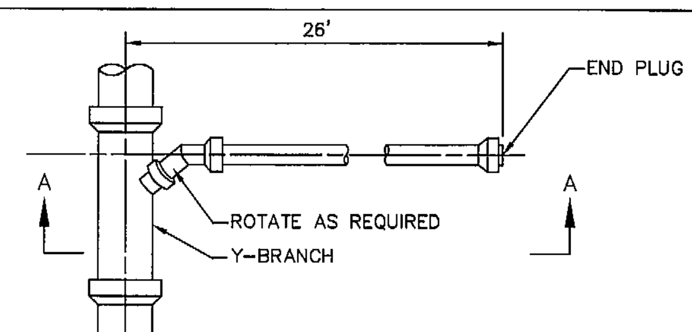

PROVIDE DETECTABLE WARNING TAPE OVER ALL SEWER LINES, FORCE MAINS, AND SEWER SERVICES.

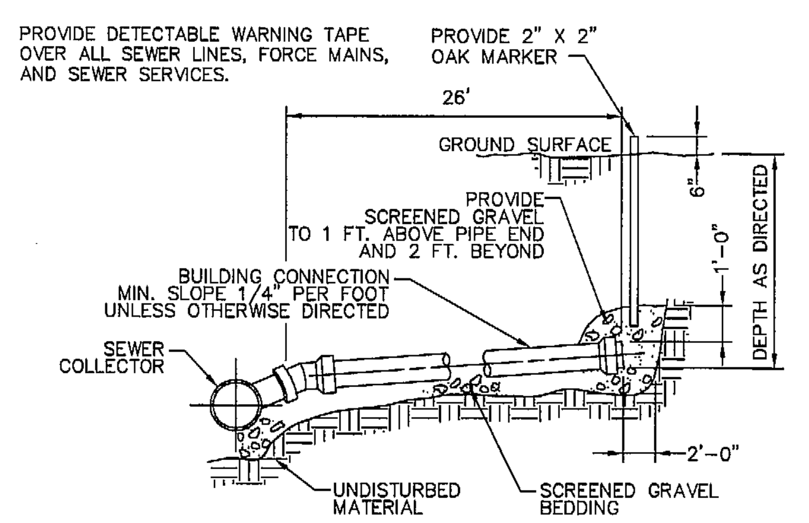

SECTION A-A

BUILDING SEWER CONNECTION
NOT TO SCALE

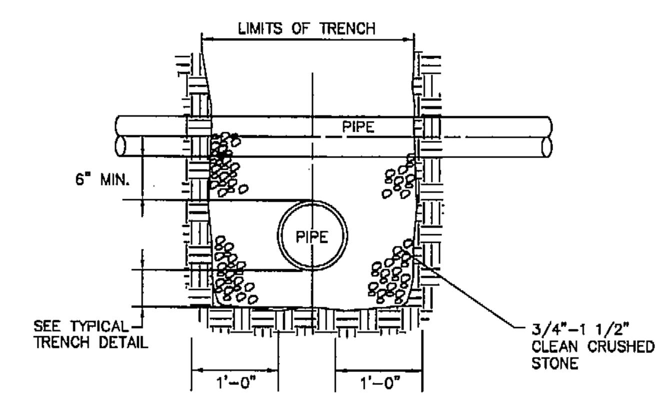

UTILITY CROSSING DETAIL
NOT TO SCALE

NOTE: FOR WATER AND SEWER CROSSINGS MANTAIN 18 INCHES OF SEPERATION BETWEEN PIPES. LAY PIPES SUCH THAT CONNECTION JOINTS ARE 10 FEET EITHER SIDE OF THE CROSSING. ALL WATER PIPES LAID OVER SEWER PIPES.

SEWER AND WATER PIPE SHALL BE CLASS 150 PRESSURE PIPE.

CONCRETE BACKING TO TO CONSIST OF: 3,000 PSI, 1-1/2", 470 CEMENT CONC. MASONRY.

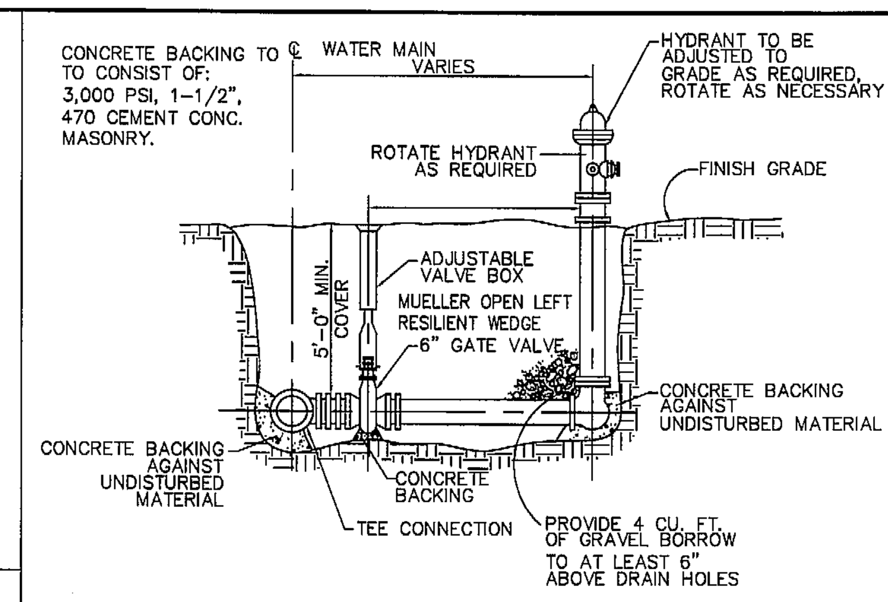

HYDRANT TYPE, SIZE AND MAKE, DIRECTION AND PITCH OF THREADS SHALL BE APPROVED BY THE FIRE DEPARTMENT PRIOR TO INSTALLATION.

TYPICAL HYDRANT AND VALVE DETAIL
NOT TO SCALE
RESTRAINED JOINT HYDRANT TEE

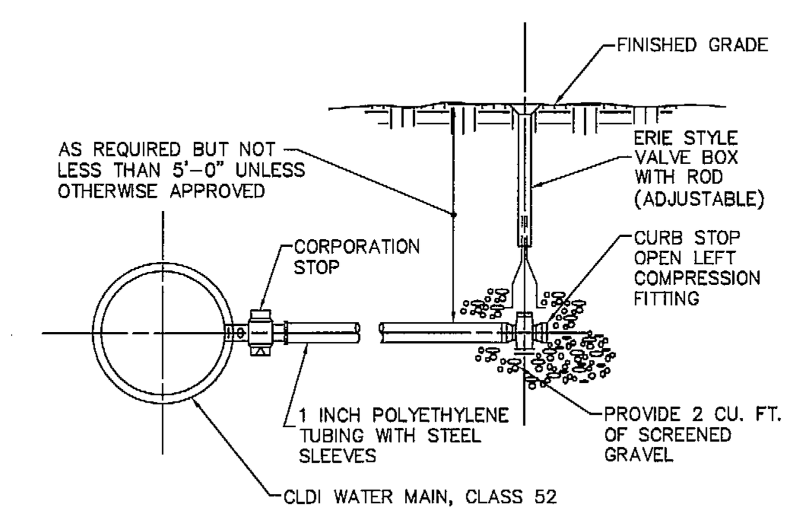

TYPICAL PERMANENT SERVICE CONNECTION
NOT TO SCALE

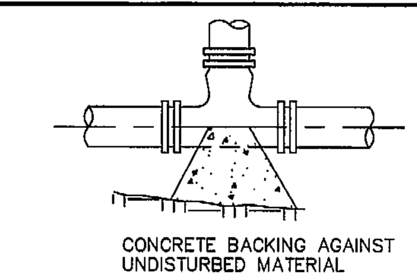

TYPICAL TEE
NOT TO SCALE

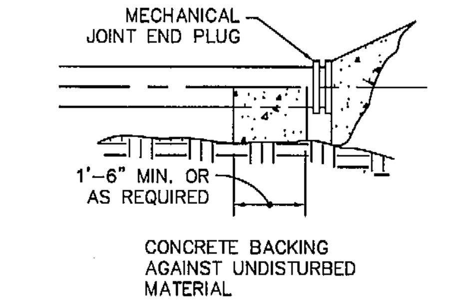

TYPICAL PLUG
NOT TO SCALE

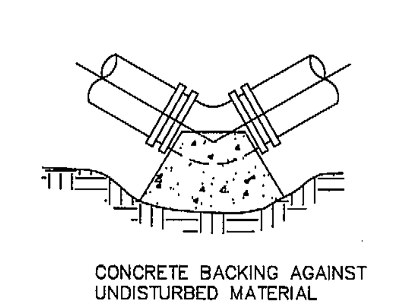

TYPICAL BEND
NOT TO SCALE

CONCRETE BACKING TO CONSIST OF: 3,000 PSI, 1-1/2", 470 CEMENT CONC. MASONRY.

TABLE OF BEARING AREAS IN SQUARE FEET AGAINST UNDISTURBED MATERIAL FOR WATER MAIN FITTINGS

SIZE OF MAIN (IN.)	45° BEND	TEES & PLUGS	22 1/2° BEND
8" OR LESS	8	10	8
10" & 12"	22	16	13

CONCRETE BACKING FOR WATER PIPE

PLAN BOOK 924 PLAN 15
SHEET 10 OF 11

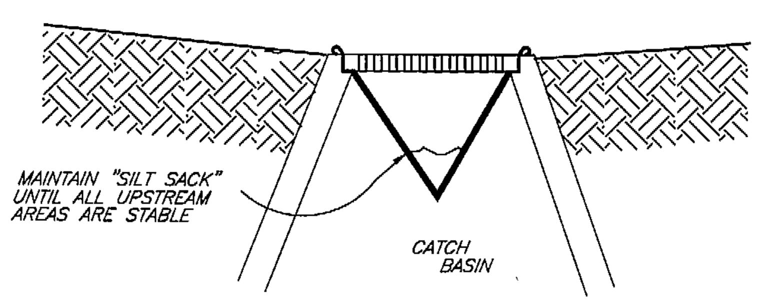

NOTES:
1. SILT SACKS ARE TO BE INSPECTED WEEKLY DURING CONSTRUCTION AND IMMEDIATELY AFTER STORM EVENTS.

2. IF SILT SACKS ARE MORE THAN 1/3RD FULL, THEY SHALL BE EMPTIED IMMEDIATELY. CAPTURED SILT SHALL BE RETAINED ON SITE AND REUSED.

SILT SACK OR EQUAL
SEDIMENT CONTAINMENT SYSTEM
NOT TO SCALE

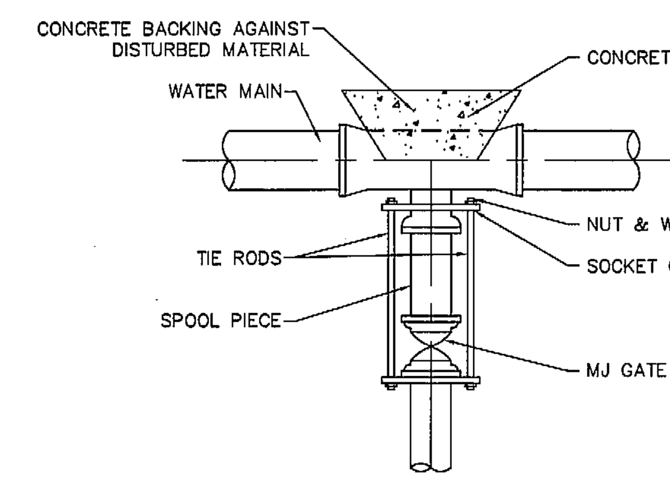

CONCRETE BACKING TO CONSIST OF: 3,000 PSI, 1-1/2", 470 CEMENT CONC. MASONRY.

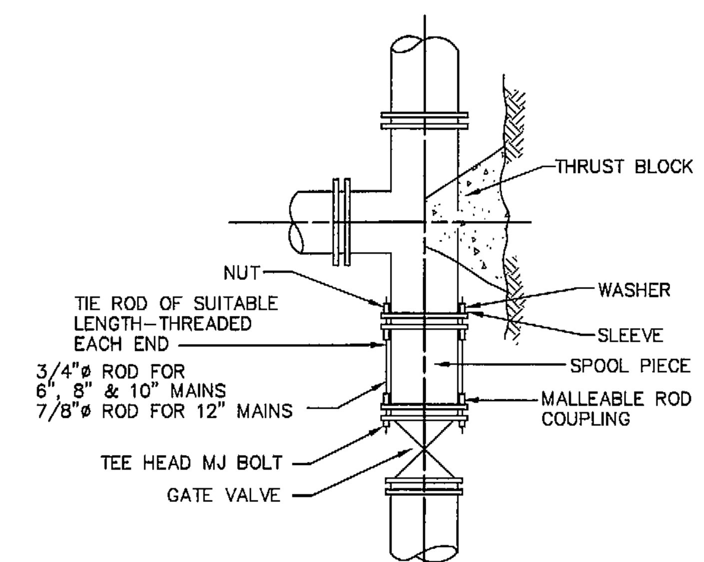

TYPICAL TIED MECHANICAL JOINT
VALVE /TEE CONNECTION DETAILS
NOT TO SCALE

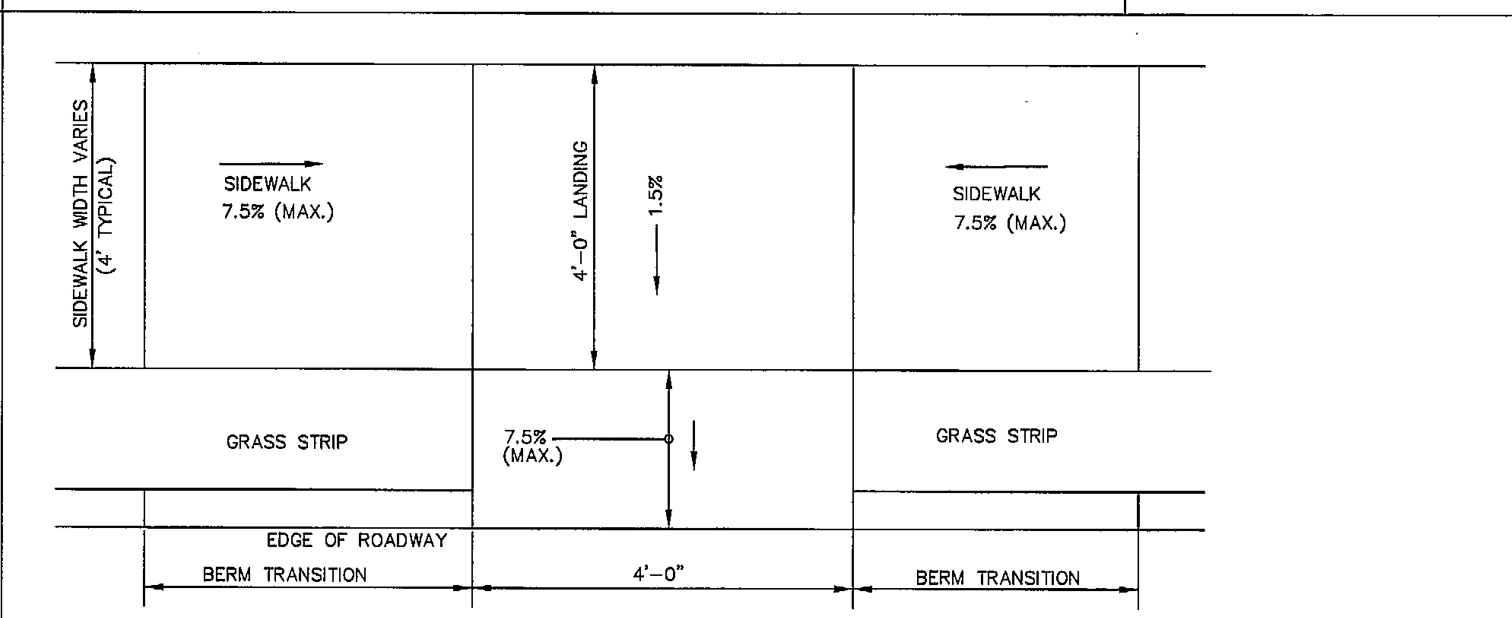

CONCRETE WHEELCHAIR CURB-CUT RAMP
NOT TO SCALE

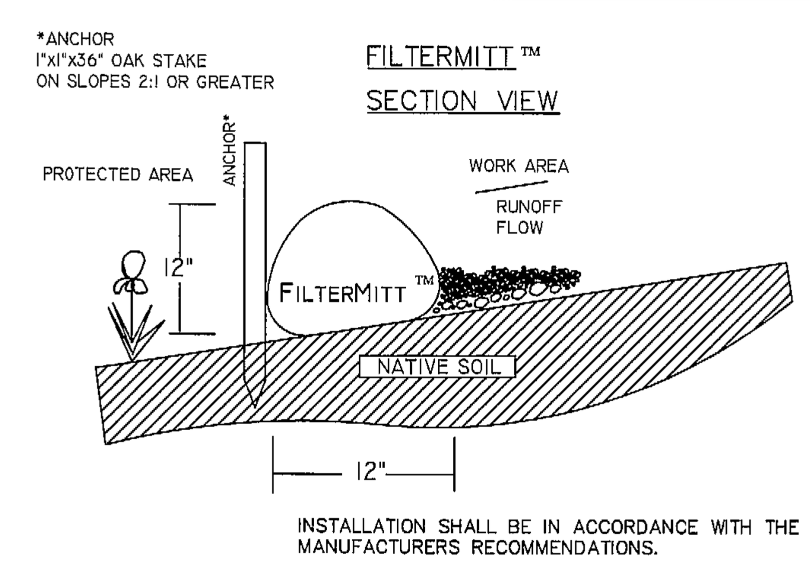

INSTALLATION SHALL BE IN ACCORDANCE WITH THE MANUFACTURERS RECOMMENDATIONS.

EROSION BARRIER DETAIL
NOT TO SCALE

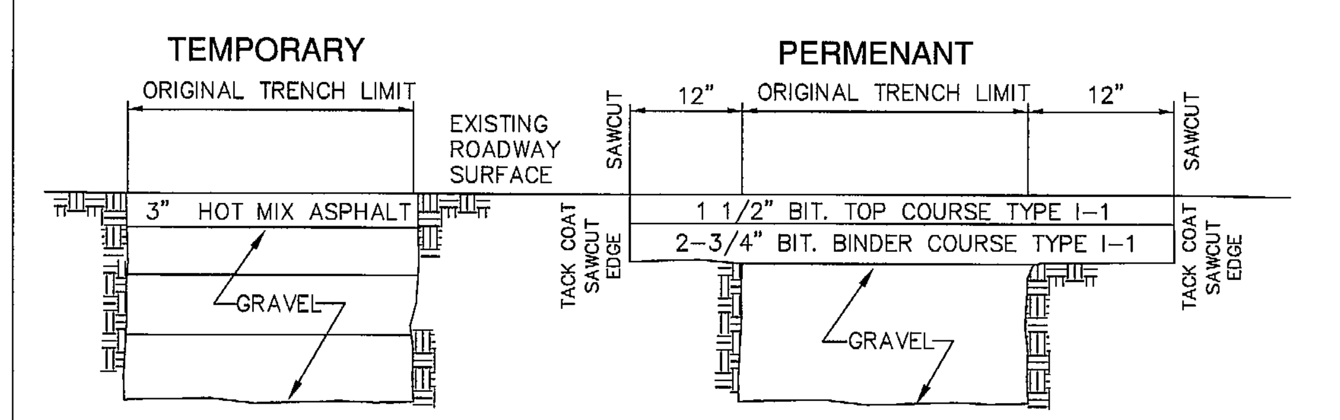

NOTES:
1. SAW CUT LIMITS SHALL BE SEALED WITH HOT POURED JOINT SEALANT.
2. GRAVEL COMPACTED IN 6" LIFTS WITH MECHANICAL COMPACTOR.
3. ALL BACKFILL TO BE COMPACTED IN ACCORDANCE WITH MDOT STANDARD SPECIFICATIONS FOR HIGHWAYS AND BRIDGES SECTION 150.64

TYPICAL TEMPORARY/PERMENANT PATCH DETAIL
NOT TO SCALE

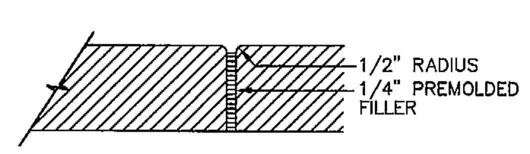

EXPANSION JOINT DETAIL

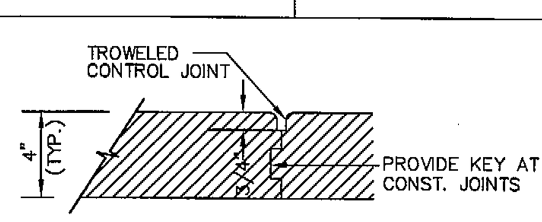

CONSTRUCTION CONTROL JOINT DETAIL

NOTES:
1. EXPANSION JOINTS AT 20'-0" OR EVERY 400 SQ. FT. OF PAD - PERPENDICULAR TO LENGTH OF PAD
2. CONSTRUCTION CONTROL JOINTS AT 5'-0" PERPENDICULAR TO LENGTH OF PAD.

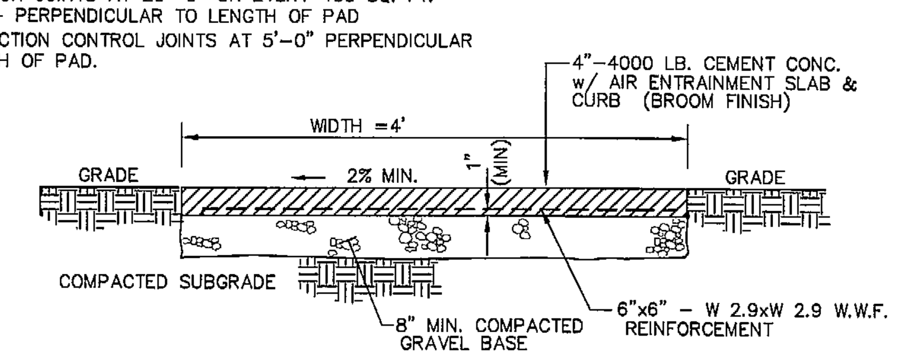

CONCRETE SIDEWALK DETAIL
NOT TO SCALE

I HEREBY CERTIFY THAT THIS PLAN WAS PREPARED IN CONFORMANCE WITH THE RULES AND REGULATIONS OF THE REGISTERS OF DEEDS.
10/26/16
VAROUJAN H. HAGOPIAN, P.L.S. 49665

COMMONWEALTH OF MASSACHUSETTS VAROUJAN H. HAGOPIAN No. 49665 PROFESSIONAL LAND SURVEYOR

REFERENCE GRAFTON PLANNING BOARD DECISION
WORCESTER REGISTRY OF DEEDS BOOK 56093, PAGE 26.

SEE CONDITIONS OF APPROVAL LISTED ON SHEET 6 OF 6.

I, Dena M Guarnard CLERK OF THE TOWN OF GRAFTON RECEIVED AND RECORDED APPROVAL FROM THE PLANNING BOARD OF THIS PLAN ON Feb 10, 2016 AND NO APPEAL WAS TAKEN FOR TWENTY (20) DAYS THEREAFTER.

APPROVAL UNDER THE SUBDIVISION CONTROL LAW, IS REQUIRED.
GRAFTON PLANNING BOARD

DATE: 12-12-16

COMMONWEALTH OF MASSACHUSETTS VITO COLONNA CIVIL No. 47635 REGISTERED PROFESSIONAL ENGINEER
10.26.16

OWNER & APPLICANT:
WESTERLY SIDE GRAFTON LLC
117 WATER ST., SUITE 201
MILFORD, MA 01757

MODIFIED DEFINITIVE SUBDIVISION PLAN

CONNORSTONE
CONSULTING CIVIL ENGINEERS AND LAND SURVEYORS
10 SOUTHWEST CUTOFF, SUITE 7
NORTHBOROUGH, MASSACHUSETTS 01532
PHONE: (508)-393-9727 FAX: (508)-393-5242

DESIGNED BY: VC, REM
CHECKED BY: VC
COMPUTED BY:
FIELD SURVEY:
DRAWN BY: REM
SCALE: NONE
SHEET 10 OF 11

CONSTRUCTION DETAILS OF GRAFTON HILL IN GRAFTON, MA

10/26/2016
6/28/2016
1/8/2016
12/28/2015
11/23/2015
REVISIONS
SEPTEMBER 30, 2015

PLAN BOOK 924 PLAN 15
SHEET 11 OF 11

TYPICAL SIGNAGE DETAILS

TRAFFIC SIGN SUMMARY			
M.U.T.C.D. NUMBER	SPECIFICATIONS		DESCRIPTION
	WIDTH	HEIGHT	
R1–1	30"	30"	STOP
R7–1	12"	18"	NO PARKING ANY TIME
R14–X	*	*	NOT A THROUGH WAY
W42–8	24"	24"	SLOW

(1) SIZE PER DPW REQUIREMENTS
(2) FINAL LOCATION, SIZE, AND TEXT TO BE COORDINATED AND APPROVED BY DPW PRIOR TO INSTALLATION.

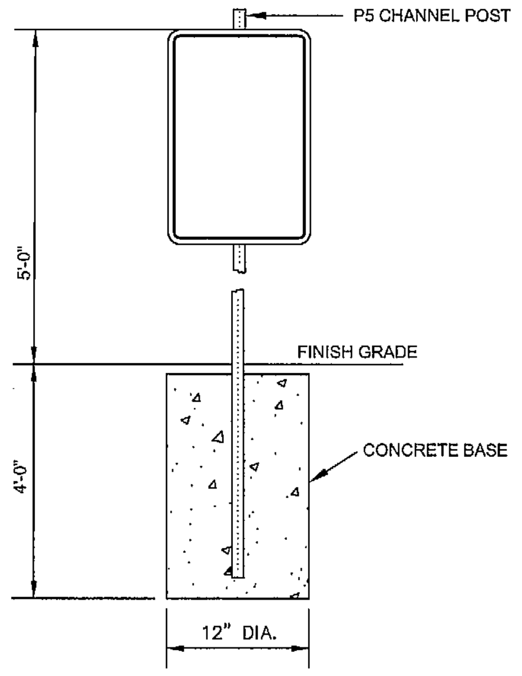

SIGN POST DETAIL
NOT TO SCALE

TYPICAL SIGNAGE DETAILS
NOT TO SCALE

TYPICAL OUTLET STRUCTURE DETAIL

DESIGN DATA & GENERAL NOTES
1.) CHASE PRECAST CORP. PRODUCT #D1 42–MTA
2.) CONCRETE STRENGTH f'c 5,000 28 DAYS. DENSITY 150 PCF.
3.) CEMENT, PORTLAND TYPE I OR III PER ASTM C150–81
4.) ADMIXTURES & PLASTICIZERS PER ASTM C233–82.
5.) REINFORCING PER ASTM A615 GRADE 60. EPOXY COATED.
6.) DESIGN LOADING PER AASHTO HS20–44 AND ACI 318–83.
7.) CONFORMS TO MASS. TURNPIKE AUTHORITY STANDARDS.
8.) INTERIOR FINISH BY CONTRACTOR.
9.) APPROXIMATE WEIGHT: 10,500 LBS..

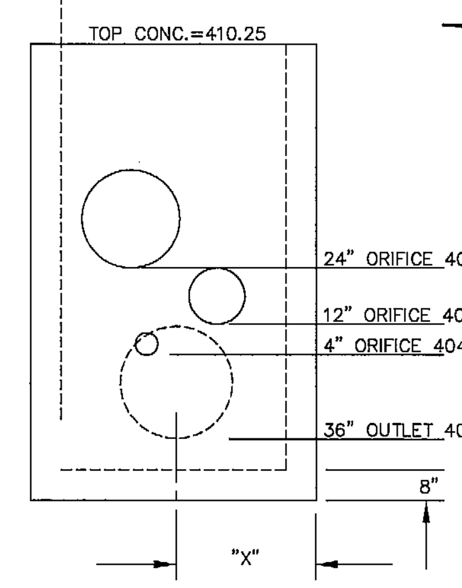

ELEVATION VIEW

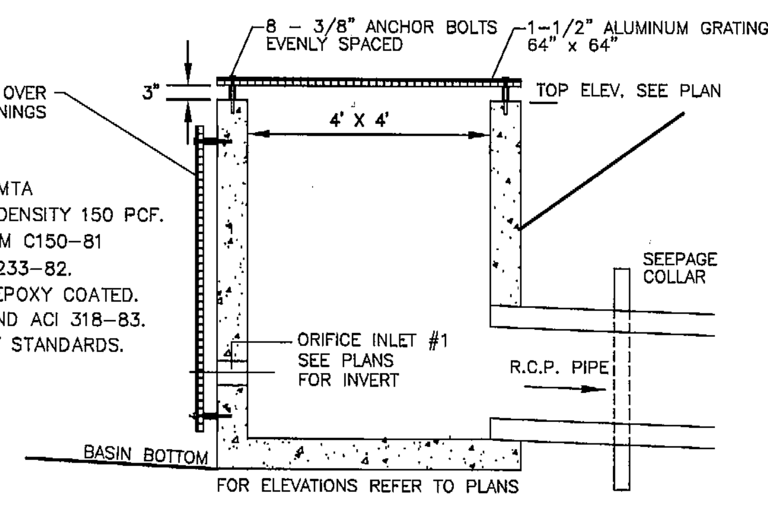

SECTION VIEW

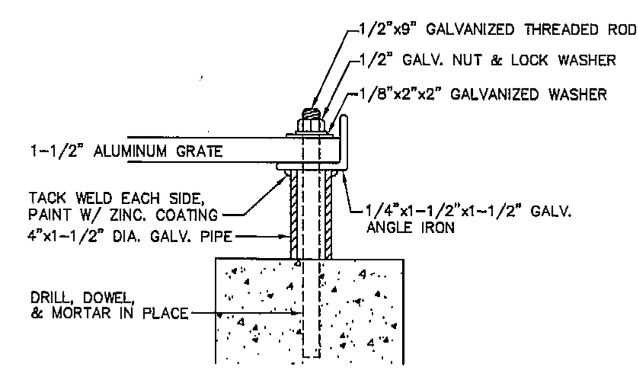

HOLD DOWN BOLT DETAIL

TYPICAL OUTLET STRUCTURE DETAIL
NOT TO SCALE

TYPICAL CONSTRUCTED WETLAND BASIN SECTION

HIGH MARSH & LOW MARSH AREAS ARE TO BE GRADED AS SHOWN ON TOPOGRAPHIC PLANS.
SEMIWET ZONE = 404.0–404.5
HIGH MARSH BOTTOM ELEV. = 403.5–404.0
LOW MARSH BOTTOM ELEV. = 403.0–403.5
FOREBAY/MICROPOOL BOTTOM ELEV. = 402.0

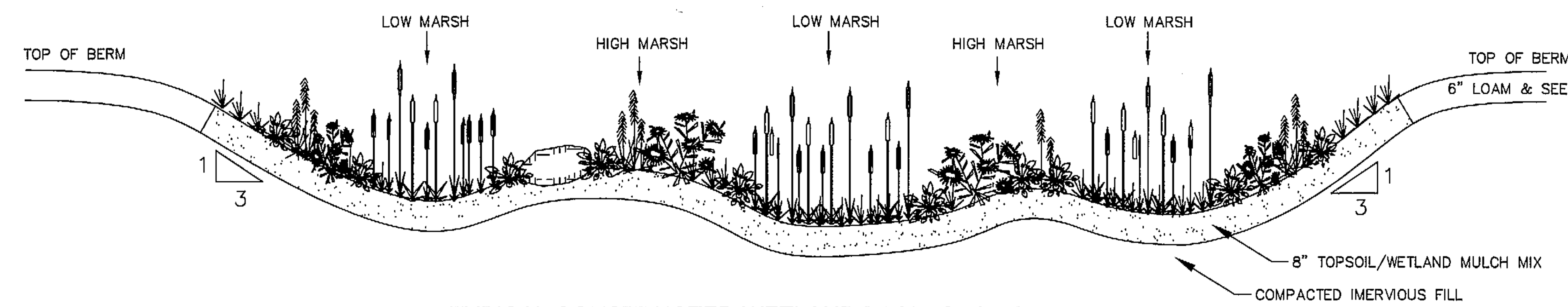

TYPICAL CONSTRUCTED WETLAND BASIN SECTION
NOT TO SCALE

CONSTRUCTION SEQUENCE:
RECOMMENDED PROCESS PER MA DEP STORM WATER HANDBOOK:

1. ONCE THE CONSTRUCTED STORM WATER WETLAND VOLUME HAS BEEN EXCAVATED, GRADE THE WETLAND TO CREATE THE MAJOR INTERNAL FEATURES (POOL, AQUATIC BENCH, DEEP WATER CHANNELS, ETC.).

2. ADD TOPSOIL AND/OR WETLAND MULCH TO THE WETLAND EXCAVATION. IF AVAILABLE, WETLAND MULCH IS PREFERABLE TO TOPSOIL.

3. AFTER THE MULCH OR TOPSOIL HAS BEEN ADDED, GRADE THE CONSTRUCTED STORM WATER WETLAND TO ITS FINAL ELEVATIONS. TEMPORARILY STABILIZE ALL WETLAND FEATURES ABOVE THE NORMAL POOL. AFTER FINAL GRADING ALLOW THE POOL TO FILL. EVALUATE THE WETLAND ELEVATIONS DURING A STANDING PERIOD TO ASSESS HOW THE CONSTRUCTED STORM WATER WETLAND RESPONDS TO STORM FLOWS AND INUNDATION, WHERE THE POND–SCAPING ZONES ARE LOCATED, AND WHETHER THE FINAL GRADE AND MICRO–TOPOGRAPHY WILL PERSIST OVER TIME.

4. PREPARE FINAL POND–SCAPING AND GRADING PLANS FOR THE CONSTRUCTED STORM WATER WETLAND. AT THE SAME TIME, ORDER WETLAND PLANT STOCKS FROM AQUATIC NURSERIES.

5. BEFORE PLANTING, MEASURE THE CONSTRUCTED STORMWATER WETLAND DEPTHS TO THE NEAREST INCH TO CONFIRM PLANTING DEPTH. IF NECESSARY, MODIFY THE POND–SCAPE PLAN AT THIS TIME TO REFLECT ALTERED DEPTHS OR AVAILABILITY OF PLANT STOCK.

6. AGGRESSIVELY APPLY EROSION CONTROLS DURING THE STANDING AND PLANTING PERIODS. STABILIZE THE VEGETATION IN ALL AREAS ABOVE THE NORMAL POOL ELEVATION DURING THE STANDING PERIOD (TYPICALLY BY HYDROSEEDING).

7. DEWATER THE CONSTRUCTED STORMWATER WETLAND AT LEAST THREE DAYS BEFORE PLANTING.

8. PERFORM FINAL PLANTING AND STABILIZATION. ALLOW POND TO FILL.

SEMI WET ZONE PLANTINGS:	*SIZE:*	*SPACING:*
HIGH BUSH BLUEBERRY	*2'–3'*	*12' O.C.*
SILKY DOGWOOD	*2'–3'*	*12' O.C.*
NORTHERN ARROWWOOD	*2'–3'*	*12' O.C.*
HIGH MARSH ZONE PLANTINGS: (0" – 6" POOL DEPTH)		
CATTAILS	*2" PLUG*	*2.5' O.C.*
JOE–PYE WEED	*2" PLUG*	*2.5' O.C.*
WOOLGRASS	*2" PLUG*	*2.5' O.C.*
LOW MARSH ZONE PLANTINGS: (6" TO 18" POOL DEPTH)		
BURREED	*2" PLUG*	*2.5' O.C.*
NORTHERN ARROWHEAD	*2" PLUG*	*2.5' O.C.*
SOFT–STEM BULRUSH	*2" PLUG*	*2.5' O.C.*
OVERSEED HIGH/LOW MARSH/FOREBAY/MICROPOOL: NEW ENGLAND WETMIX (WETLAND SEED MIX) PRODUCED BY: NEW ENGLAND WETLAND PLANTS, INC. APPLICATION RATE: 1 LB/2,500 S.F		
BASIN SIDE SLOPES: SEEDED WITH NEW ENGLAND CONSERVATION/WILDLIFE MIX, BY NEW ENGLAND WETLAND PLANTS, INC, OR EQUAL.		

*BASIN PLANTINGS ARE A GUIDE, AND MAY BE MODIFIED BASED UPON FIELD CONDITIONS.

WETLAND REPLICATION DETAIL (BY GODDARD CONSULTING LLC)

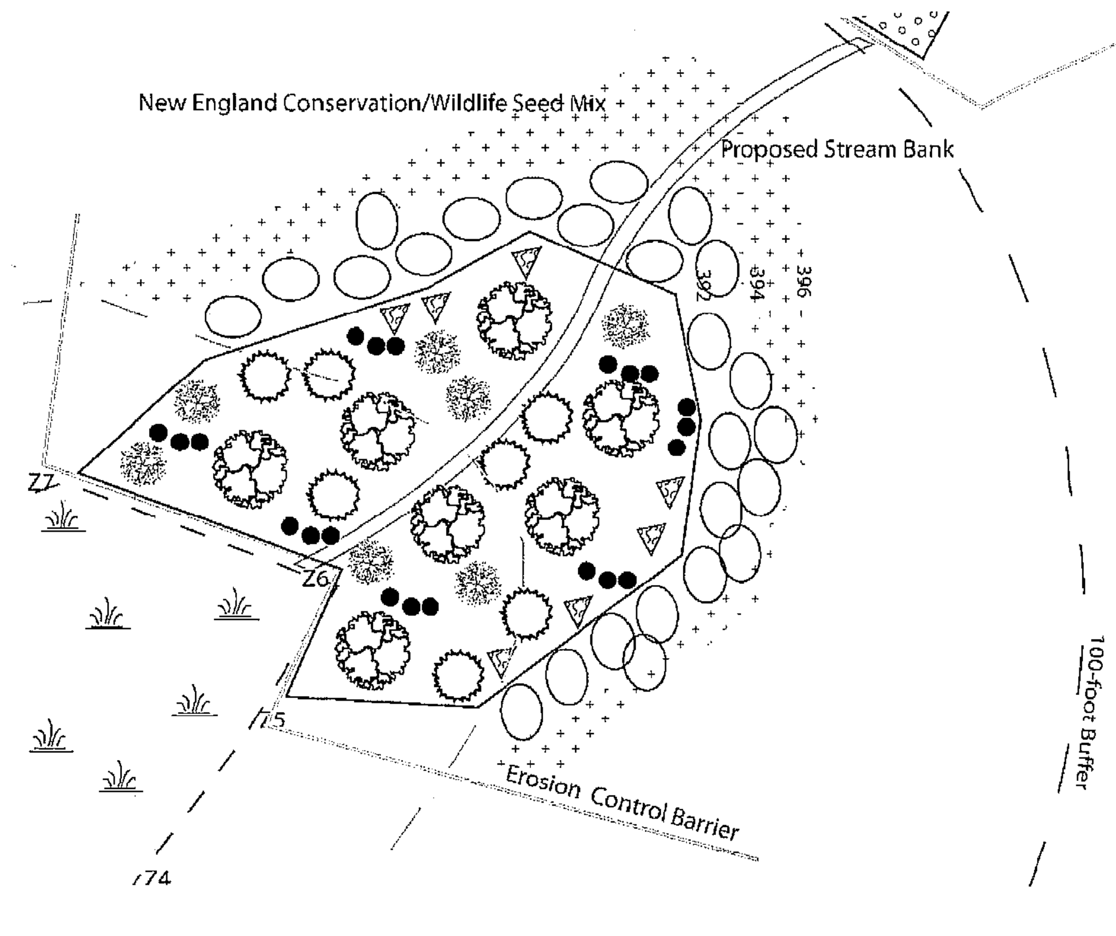

Symbol	# Plants	Common Name	Scientific Name	Initial Height
Trees				
	7	Red Maple	*Acer rubrum*	1.5 cal
Shrubs				
	7	Highbush Blueberry	*Vaccinium corymbosum*	18-24"
	7	Spicebush	*Lindera benzoin*	18-24"
	25	Sweet Pepperbush	*Clethra alnifolia*	18-24"
	7	Winterberry	*Ilex verticillata*	18-24"
Herbaceous				
	21	Cinnamon Fern	*Osmunda cinnamomea*	1-gal

New England Wetland Seed Mix to be used as needed for erosion control in wetland replication area, and New England Conservation/Wildlife Mix seed mix to be used in disturbed upland areas.

WETLAND REPLICATION DETAIL (BY GODDARD CONSULTING LLC)
NOT TO SCALE

TEMPORARY SEDIMENT BASIN

TEMPORARY SEDIMENT BASIN SHALL BE LOCATED IN THE FUTURE LOCATION OF THE PROPOSED CONSTRUCTED WETLAND. BOTTOM OF SEDIMENT BASIN SHALL BE AT ELEV. 403.5. ONCE THE SITE IS STABILIZED, ALL SEDIMENT SHALL BE REMOVED AND THE CONSTRUCTED WETLAND INSTALLED PER THE PLANS AND DETAILS.

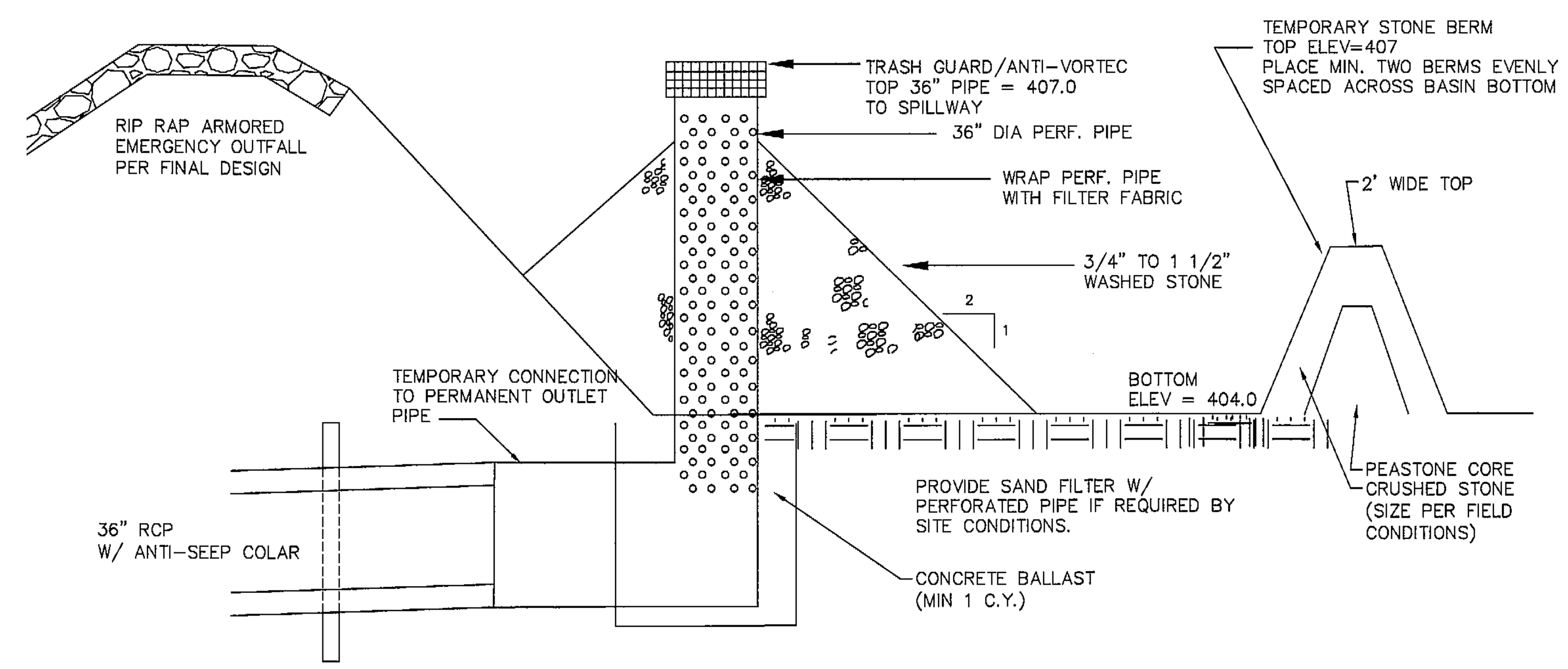

TEMPORARY SEDIMENT BASIN
NOT TO SCALE

TYPICAL EARTH EMBANKMENT SECTION

NOTES:
1. ANY PIPE PENETRATIONS THROUGH EMBANKMENT SHALL BE EQUIPPED WITH ANIT–SEEPAGE COLLARS.

2. EMBANKMENT CONSTRUCTION AND MATERIALS SHALL BE SHALL REVIEWED BY GEOTECHNICAL ENGINEER AND INSPECTED DURING CONSTRUCTION.

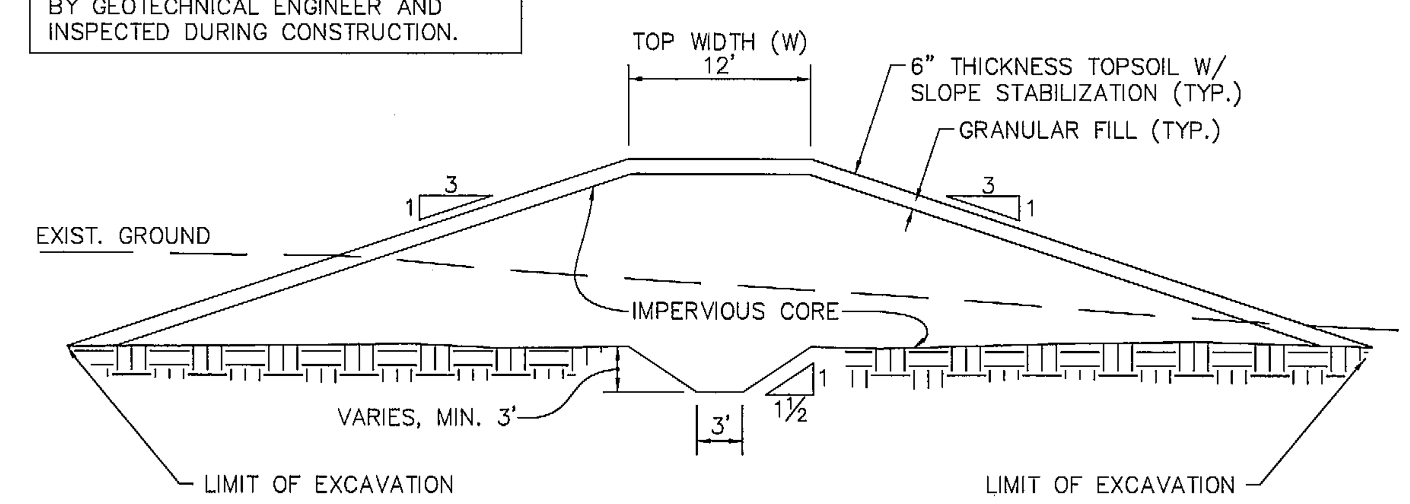

TYPICAL EARTH EMBANKMENT SECTION
NOT TO SCALE

GENERAL INSTALLATION PROCEDURES:

SUPERVISION: ALL WORK WITHIN THE REPLICATION AREA SHALL BE SUPERVISED BY A QUALIFIED WETLAND SCIENTIST. THE SUPERVISOR SHALL SUBMIT MONITORING REPORTS TO THE CONSERVATION COMMISSION AS DESCRIBED BELOW. REPORTS SHALL CONTAIN DETAILS OF ALL WORK PERFORMED AND PHOTOGRAPHS OF COMPLETED CONDITIONS.
TIMING: THE INSTALLATION OF REPLICATION AREA SHALL BE ACCOMPLISHED DURING THE GROWING SEASON BETWEEN APRIL 16 AND MAY 31 OR BETWEEN SEPTEMBER 16 AND OCTOBER 30. SITE PREPARATION MAY BE DONE OUTSIDE THESE DATES, AND MULCHED WITH WEED FREE HAY TO PREVENT EROSION PRIOR TO PLANTING. PREPARATION OF THE REPLICATION AREA AND STREAM CHANNEL TO BE ACCOMPLISHED DURING A NO FLOW PERIOD.

STEP 1: STAKE LIMITS OF WORK & INSTALL ECB. STAKE OUT LIMITS OF ALL WORK FOR REPLICATION AREA. EROSION CONTROL BARRIERS SHALL THEN BE INSTALLED IN THE FORM OF STAKED SILTATION FENCE AND MULCH SOCK (OR SIMILAR INVASIVE–FREE BARRIER) AT THE LIMIT OF WORK FOR THE REPLICATION AREA. THESE WILL REMAIN IN PLACE AND BE MAINTAINED UNTIL ALL AREAS ARE COMPLETELY STABILIZED. REMOVE TREES AND VEGETATION AS NEEDED FOR CONSTRUCTION.

STEP 2: EXCAVATION OF IMPACT BVW. CLEAR TREES, SHRUBS AND GRUB STUMPS. AN EXCAVATOR SHALL REMOVE EXISTING ORGANIC SOILS UP TO THE EDGE OF THE STAKED FILL AREA BOUNDARY. EXCAVATED ORGANIC SOILS FROM FILL AREAS SHALL BE STOCKPILED OUTSIDE THE BUFFER OF BVW, AND USED IN THE REPLICATION AREA. CARE SHALL BE TAKEN TO AVOID CONTACT WITH OTHER NON–WETLAND SOILS THAT MAY CONTAIN SEEDS OF UNDESIRABLE PLANT SPECIES.

STEP 3: PREPARATION OF DETENTION BASINS AND REPLICATION AREA. SITE PREPARATION OF DETENTION BASINS AND REPLICATION AREA ARE TO BE ACCOMPLISHED TOGETHER. CLEAR TREES, SHRUBS AND GRUB STUMPS. PRIOR TO ANY SOIL EXCAVATION, A STORAGE AREA FOR SOIL AND LEAF LITTER SHALL BE PREPARED; SOIL SHALL NOT BE STORED IN BUFFER ZONE. TOPSOIL, LEAF LITTER, AND SUBSOIL SHALL BE STOCKPILED SEPARATELY. AN EXCAVATOR SHALL REMOVE EXISTING SOILS WITHIN THE WETLAND REPLICATION AREA UP TO THE EDGE OF THE STAKED BVW REPLICATION AREA BOUNDARY, TO A DEPTH AT WHICH REDOXIMORPHIC FEATURES BECOME VISIBLE AT THE SOIL SURFACE AND ONE FOOT BELOW PROPOSED FINAL GRADE. AFTER EXCAVATION OF BVW, THE LOCATION OF BANK CHANNEL SHALL BE STAKED AND DUG 6–12" BELOW PROPOSED FINAL GRADE. THE CHANNEL SHALL BE FORMED WITH GENTLE SLOPES TO MEET TOP OF SURROUNDING BVW GRADE.

STEP 4: FINAL GRADING OF REPLICATION AREA. UPON REMOVAL OF EXISTING UPLAND SOILS, ORGANIC TOPSOIL WITH AN ORGANIC CONTENT OF 12–20% SHALL BE PLACED WITHIN THE REPLICATION AREA TO A DEPTH EVEN WITH THE SURROUNDING PROPOSED ELEVATION ON DESIGN PLAN, TO BE DETERMINED BY THE SUPERVISING WETLAND SCIENTIST. FINAL GRADE SHALL BE CONFIRMED BY WETLAND SCIENTIST PRIOR TO PLANTINGS. THE ORGANIC SOIL SHOULD BE SOURCED FROM THE SOILS STOCKPILED FROM THE IMPACT AREA. IF THE TRANSPLANTED SOILS DO NOT FILL ENTIRE REPLICATION AREA, SUPPLEMENT WITH ORGANIC SOILS FROM AN OFFSITE SOURCE. SUPPLEMENTAL SOILS MUST BE FROM AN UNCONTAMINATED SOURCE AND HAVE AN ORGANIC CONTENT OF BETWEEN 12–20%.AFTER BANK CHANNEL CREATION, BIODEGRADABLE JUTE NETTING SHALL BE LAID DOWN OVER IT AND STAKED, AND 3–5" ROUNDED STONES SHALL BE PLACED AT INTERVALS ALONG LENGTH, NOT TO EXCEED 3–FEET BETWEEN PLACEMENT OF STONES, OF THE CHANNEL TO MIMIC NATURAL FLOW PATTERN.

STEP 5: ADD WOODY DEBRÍS. PRIOR TO PLANTING, WOODY DEBRIS OF VARIOUS SIZES SHALL BE RANDOMLY PLACED WITHIN BVW AND SB.

STEP 6: PLANTING. THE VEGETATION SELECTED FOR THE REPLICATION AREAS INCLUDES SPECIES THAT AND ARE LOCATED WITHIN THE ADJACENT BVW. PRECISE CITING OF PLANTS MAY BE DETERMINED BY THE WETLAND SCIENTIST IN THE FIELD PRIOR TO INSTALLATION. ALL PLANTS SHALL BE DISTRIBUTED RANDOMLY THROUGHOUT THE AREA; TREES TO BE SPACED 12–15' FEET ON CENTER, SHRUBS SPACED AT 6–8' ON CENTER AND HERBACEOUS SPECIES 3' OR LESS ON CENTER. LEAF LITTER SHALL BE SPREAD THROUGHOUT AREA. WETLAND SEED MIX, IF NEEDED FOR EROSION CONTROL, SHALL BE SCATTERED EVENLY BY HAND THROUGHOUT THE REPLICATION AREA. NEW ENGLAND CONSERVATION/WILDLIFE SEED MIX SHALL BE SCATTERED EVENLY THROUGHOUT UPLAND AREAS OUTSIDE THE BVW.

STEP 7: REPLICATION MONITORING
A. SEASONAL MONITORING REPORTS SHALL BE PREPARED FOR THE REPLICATION AREA BY A QUALIFIED WETLAND SCIENTIST FOR A PERIOD OF 2 ADDITIONAL YEARS AFTER INSTALLATION. THIS MONITORING PROGRAM WILL CONSIST OF EARLY SUMMER AND EARLY FALL INSPECTIONS, AND WILL INCLUDE PHOTOGRAPHS AND DETAILS ABOUT THE VITALITY OF THE REPLICATION AREA. MONITORING REPORTS SHALL BE SUBMITTED TO THE COMMISSION BY OCTOBER 30TH OF EACH YEAR. MONITORING REPORTS SHALL DESCRIBE, USING NARRATIVES, PLANS, AND COLOR PHOTOGRAPHS, THE PHYSICAL CHARACTERISTICS OF THE REPLICATION AREA WITH RESPECT TO STABILITY, SOIL CHARACTERISTICS, SURVIVAL OF VEGETATION AND PLANT MORTALITY, AERIAL EXTENT AND DISTRIBUTION, SPECIES DIVERSITY AND VERTICAL STRATIFICATION (I.E. HERB, SHRUB AND TREE LAYERS).
B. AT LEAST 75% OF THE SURFACE AREA OF THE REPLICATION AREA SHALL BE RE–ESTABLISHED WITH INDIGENOUS PLANT SPECIES WITHIN TWO GROWING SEASONS. IF THE REPLICATION AREA DOES NOT MEET THE 75% RE–VEGETATION REQUIREMENT BY THE END OF THE SECOND GROWING SEASON AFTER INSTALLATION, THE APPLICANT SHALL SUBMIT A REMEDIATION PLAN TO THE COMMISSION FOR APPROVAL THAT WILL ACHIEVE, UNDER THE SUPERVISION OF A WETLAND SPECIALIST, REPLICATION GOALS. THIS PLAN MUST INCLUDE AN ANALYSIS OF WHY THE AREAS HAVE NOT SUCCESSFULLY RE–VEGETATED AND HOW THE APPLICANT INTENDS TO RESOLVE THE PROBLEM.

STEP 8: AS–BUILT SURVEY. UPON MEETING THE CRITERIA FOR 75% COVER OF INDIGENOUS SPECIES AFTER TWO GROWING SEASONS, THE REPLICATION AREAS WILL BE SURVEYED FOR AS–BUILT CONDITIONS. THE AS–BUILT PLAN WILL BE SUBMITTED TO THE CONSERVATION COMMISSION ALONG WITH A REQUEST FOR A CERTIFICATE OF COMPLIANCE.

I HEREBY CERTIFY THAT THIS PLAN WAS PREPARED IN CONFORMANCE WITH THE RULES AND REGULATIONS OF THE REGISTERS OF DEEDS.
[signature] 10/26/16
VAROUJAN H. HAGOPIAN, P.L.S. 49665

COMMONWEALTH OF MASSACHUSETTS VAROUJAN H. HAGOPIAN No. 49665 PROFESSIONAL LAND SURVEYOR

REFERENCE GRAFTON PLANNING BOARD DECISION
WORCESTER REGISTRY OF DEEDS BOOK 56093, PAGE 26.

SEE CONDITIONS OF APPROVAL LISTED ON SHEET 6 OF 6.

I, Dana M Girouard CLERK OF THE TOWN OF GRAFTON RECEIVED AND RECORDED APPROVAL FROM THE PLANNING BOARD OF THIS PLAN ON Feb.10, 2016 AND NO APPEAL WAS TAKEN FOR TWENTY (20) DAYS THEREAFTER.

COMMONWEALTH OF MASSACHUSETTS VITO COLONNA CIVIL No. 47635 REGISTERED PROFESSIONAL ENGINEER
[signature] 10.26.16

APPROVAL UNDER THE SUBDIVISION CONTROL LAW, IS REQUIRED.
GRAFTON PLANNING BOARD
[signatures]
DATE: 12-12-2016

OWNER & APPLICANT:
WESTERLY SIDE GRAFTON LLC
117 WATER ST., SUITE 201
MILFORD, MA 01757

MODIFIED DEFINITIVE SUBDIVISION PLAN

CONNORSTONE
CONSULTING CIVIL ENGINEERS AND LAND SURVEYORS
10 SOUTHWEST CUTOFF, SUITE 7
NORTHBOROUGH, MASSACHUSETTS 01532
PHONE: (508)–393–9727 FAX: (508)–393–5242

DESIGNED BY: VC, REM	
CHECKED BY: VC	
COMPUTED BY:	
FIELD SURVEY:	
DRAWN BY: REM	
SCALE: NONE	
SHEET 11 OF 11	

CONSTRUCTION DETAILS OF GRAFTON HILL IN GRAFTON, MA

10/26/2016
7/12/2016
6/28/2016
1/8/2016
12/28/2015
11/23/2015
REVISIONS
SEPTEMBER 30, 2015