GRAFTON WATER DISTRICT

WORCESTER STREET PUMP STATION REPLACEMENT PROJECT

PERMIT DRAWINGS

AUGUST 2019

LIST OF DRAWINGS	
SHEET NO.	SHEET TITLE
G-001	COVER SHEET AND LIST OF DRAWINGS
G-002	GENERAL NOTES, ABBREVIATIONS AND LEGEND
C-101	EXISTING CONDITIONS SITE PLAN
C-102	DEMOLITION & SITE PREPARATION PLAN
C-103	PROPOSED LAYOUT PLAN
C-104	PROPOSED GRADING PLAN
C-105	PROPOSED UTILITY PLAN
C-201	SITE DETAILS - 1
C-202	SITE DETAILS - 2
C-203	SITE DETAILS - 3
C-204	SITE DETAILS - 4
C-205	SITE DETAILS - 5
A-101	PUMP STATION FLOOR PLAN
A-201	PUMP STATION EXTERIOR ELEVATIONS

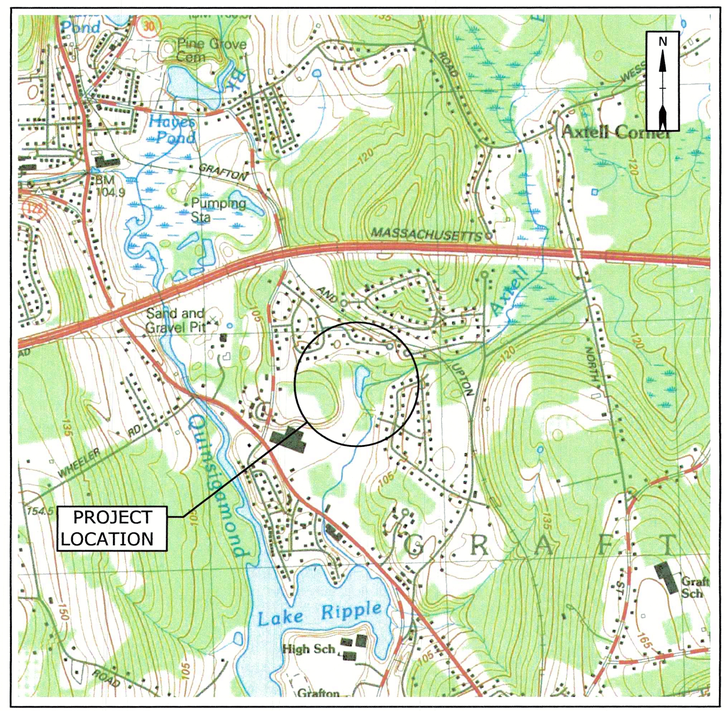

LOCATION MAP
SCALE: 1" = 1000'

PREPARED BY:

Tighe&Bond
www.tighebond.com
446 Main Street
Worcester, MA 01608
(508) 754-2201

COMMONWEALTH OF MASSACHUSETTS THOMAS J. MAHANNA CIVIL No. 39479 REGISTERED PROFESSIONAL ENGINEER 8/19/19

THOMAS J. MAHANNA, PE

COMMONWEALTH OF MASSACHUSETTS LOUIS A. SORACCO CIVIL No. 47126 REGISTERED PROFESSIONAL ENGINEER 8/19/19

LOUIS A. SORACCO, PE

PREPARED FOR:

GRAFTON WATER DISTRICT
MATTHEW PEARSON - DISTRICT MANAGER
44 MILLBURY STREET
GRAFTON, MA 01519

PERMIT DRAWINGS
NOT FOR CONSTRUCTION

COMPLETE SET 14 SHEETS

J:\G\G0676 GRAFTON WORCESTER ST. WELL\DRAWINGS_FIGURES\AUTOCAD\SHEET\PERMIT DRAWINGS\G0676-C-PERMIT DRAWINGS.DWG
SAVE DATE: 8/19/2019 7:38 AM
PLOT DATE: 8/19/2019 7:40 AM

GENERAL NOTES:

1. PER MASSACHUSETTS LAW, CALL 1-888-DIG-SAFE, (1-888-344-7233), THE MUNICIPALITY AND THE PROPERTY OWNER PRIOR TO ANY UNDERGROUND EXCAVATION ON SITE. SUBMIT THE DIG-SAFE VERIFICATION NUMBER TO THE APPROPRIATE MUNICIPALITY PRIOR TO ANY EXCAVATION, DEMOLITION AND REMOVAL OR CONSTRUCTION WORK.
2. EXISTING CONDITIONS WERE DEVELOPED FROM THE FEBRUARY 2, 2016 TOPOGRAPHICAL SURVEY TITLED 'EXISTING CONDITIONS PLAN OF LAND IN GRAFTON, MASS' AND PREPARED BY GRAZ ENGINEERING - FITZWILLIAM, NH. THE HORIZONTAL DATUM REFERENCED IS NAD83 AND THE VERTICAL DATUM IS NAV88.
3. SOIL MAPPING DATA WAS TAKEN FROM THE CUSTOM SOIL RESOURCE REPORT FOR WORCESTER COUNTY PROVIDED BY THE UNITED STATES DEPARTMENT OF AGRICULTURE (USDA) NATURAL RESOURCES CONSERVATION SERVICE (NRCS).
4. FIELD VERIFY ALL EXISTING CONDITIONS PRIOR TO CONSTRUCTION. IF FIELD CONDITIONS ARE OBSERVED THAT VARY SIGNIFICANTLY FROM THOSE SHOWN ON THESE PLANS, IMMEDIATELY NOTIFY THE ENGINEER IN WRITING FOR RESOLUTION OF THE CONFLICTING INFORMATION.
5. PROVIDE A SMOOTH, FLUSH TRANSITION BETWEEN ALL NEW AND EXISTING PAVEMENTS.
6. COMPLY WITH OSHA'S LATEST STANDARDS FOR EXCAVATION WORK. FOLLOW ALL REQUIREMENTS OF OSHA'S EXCAVATION STANDARDS INCLUDING, BUT NOT LIMITED TO, THE PROVISION FOR A COMPETENT PERSON ON SITE AND ANY REQUIRED DOCUMENTATION THAT MAY REQUIRE CERTIFICATION BY A PROFESSIONAL ENGINEER.
7. MAINTAIN ALL UTILITIES FUNCTIONING PROPERLY IN THE AREAS UNDER CONSTRUCTION PRIOR TO THE TIME WHEN FINAL SYSTEM IS PUT INTO USE. LEAVE ALL PIPES AND STRUCTURES WITHIN THE LIMITS OF THIS CONTRACT IN A CLEAN AND OPERABLE CONDITION AT THE COMPLETION OF THE WORK. TAKE ALL NECESSARY PRECAUTIONS TO PREVENT SAND AND SILT FROM DISTURBED AREAS FROM ENTERING THE SYSTEM. CONTRACTOR IS RESPONSIBLE FOR DAMAGE SUSTAINED TO ANY EXISTING UTILITIES AND IS RESPONSIBLE FOR REPAIRS THAT COMPLY WITH THE REQUIREMENTS OF THE TOWN, DISTRICT, OR RESPECTIVE UTILITY COMPANY.
8. DISPOSE OF ANY AND ALL DEMOLISHED BUILDING MATERIALS, STORAGE TANKS, PAVEMENT, BITUMINOUS CURBING, CONCRETE, VEGETATION, SURPLUS MATERIAL, AND SITE RUBBLE OFF-SITE IN ACCORDANCE WITH LOCAL ORDINANCES, THE MASSACHUSETTS WETLAND PROTECTION ACT, CHAPTER 131, SECTION 40, G.L., AND ALL APPLICABLE STATE AND FEDERAL ENVIRONMENTAL REGULATIONS.
9. LOAM & SEED ALL DISTURBED AREAS UNLESS OTHERWISE SPECIFIED. OVER-EXCAVATE LOAM & SEED AREAS AS REQUIRED TO MEET GRADE.
10. TEST PITS TO LOCATE EXISTING UTILITIES ARE STRONGLY ENCOURAGED AND MAY BE ORDERED BY ENGINEER.
11. CONDUCT ALL CLEARING, GRADING, DRAINAGE, CONSTRUCTION AND DEVELOPMENT IN STRICT ACCORDANCE WITH THE PLANS.
12. WETLAND RESOURCE AREAS WERE DELINEATED BY TIGHE & BOND, INC. ON JULY 2015 AND LOCATED BY SURVEY.
13. THE EXISTENCE OF UTILITIES AND APPURTENANCES AS SHOWN ON THESE DRAWINGS ARE FOR REFERENCE ONLY, AND THE EXACT SIZE, TYPE, LOCATION AND ELEVATION SHALL BE THOROUGHLY INVESTIGATED BY THE CONTRACTOR PRIOR TO THE START OF CONSTRUCTION. FIELD MEASURE TO VERIFY EXISTING AND CONTRACT INTERFACE DIMENSIONS, LOCATIONS, AND OTHER CONDITIONS. THE CONTRACTOR SHALL BE FULLY RESPONSIBLE FOR ANY AND ALL DAMAGE WHICH MIGHT BE OCCASIONED BY FAILURE TO EXACTLY LOCATE AND PRESERVE ANY AND ALL UTILITIES.
14. IF THE NEW WATER MAIN CROSSES ABOVE A SEWER OR DRAIN MAIN, MAINTAIN A MINIMUM 12" VERTICAL SEPARATION FROM INVERT OF WATER MAIN TO CROWN OF SEWER OR DRAIN. IF THE NEW WATER MAIN CROSSES BELOW A SEWER MAIN OR DRAIN, MAINTAIN A MINIMUM OF 18" VERTICAL SEPARATION FROM THE INVERT OF SEWER OR DRAIN TO THE CROWN OF THE WATER MAIN.
15. MINIMUM PIPE COVER SHALL BE 4'-6' AS MEASURED FROM THE UNDERSIDE OF THE PAVEMENT, UNLESS OTHERWISE SHOWN ON THE DRAWINGS OR DIRECTED IN THE FIELD BY THE OWNER'S PROJECT REPRESENTATIVE.
16. HORIZONTAL AND VERTICAL LOCATION OF WATER MAIN MAY BE MODIFIED TO FIT EXISTING FIELD CONDITIONS UPON APPROVAL OF THE ENGINEER OR OWNER.
17. PERFORM ALL EXCAVATION SO THAT UNDERGROUND UTILITIES OR STRUCTURES ARE NOT DAMAGED. CONTRACTOR SHALL BE RESPONSIBLE FOR ANY DAMAGE INCURRED DURING EXCAVATION OPERATIONS. REPAIR ANY EXISTING PIPE OR UTILITY DAMAGED DURING CONSTRUCTION AT NO ADDITIONAL COST TO THE OWNER.
18. SHORE UTILITY TRENCHES WHERE FIELD CONDITIONS DICTATE AND/OR WHERE REQUIRED BY LOCAL, STATE AND FEDERAL HEALTH AND SAFETY CODES.
19. TAKE NECESSARY MEASURES AND PROVIDE CONTINUOUS BARRIERS OF SUFFICIENT TYPE, SIZE, AND STRENGTH TO PREVENT ACCESS TO ALL WORK AND STAGING AREAS AT THE COMPLETION OF EACH DAYS WORK.
20. STORE FUEL, OIL, PAINT, OR OTHER HAZARDOUS MATERIALS IN A SECONDARY CONTAINER AND REMOVE FROM THE SITE TO A LOCKED INDOOR AREA WITH AN IMPERVIOUS FLOOR DURING NON-WORK HOURS.
21. PROVIDE A SUPPLY OF ABSORBENT SPILL RESPONSE MATERIALS, SUCH AS BOOMS, BLANKETS, AND OIL ABSORBENT MATERIALS AT THE CONSTRUCTION SITE AT ALL TIMES TO CLEAN UP POTENTIAL SPILLS OF HAZARDOUS MATERIALS. IMMEDIATELY REPORT SPILLS OF HAZARDOUS MATERIALS TO MASSDEP AT 508-792-7650 AND THE COMMUNITY WHERE THE WORK IS OCCURRING.
22. REGRADE ALL UNPAVED AREAS DISTURBED BY THE WORK TO ORIGINAL CONTOURS OR PROPOSED CONTOURS AS REQUIRED BY THE DRAWINGS. LOAM AND SEED ALL UNPAVED AREAS DISTURBED BY THE WORK.
23. PROVIDE ACCESS FOR EMERGENCY VEHICLES AT ALL TIMES.
24. LIGHT TEXT AND LINES INDICATE APPROXIMATE EXISTING CONDITIONS. BOLD TEXT AND LINES INDICATE PROPOSED WORK.
25. REPAIR/REPLACE PAVED SURFACES DISTURBED BY THE WORK IN-KIND, UNLESS NOTED OTHERWISE.
26. NOTIFY THE OWNER'S PROJECT REPRESENTATIVE OF ANY EXISTING UTILITY DISCOVERED DURING THE WORK THAT IS NOT SHOWN ON THE DRAWINGS.

ABBREVIATIONS:

BIT.	BITUMINOUS
BC	BOTTOM OF CURB
BLDG	BUILDING
CB	CATCH BASIN
CONC	CONCRETE
DI	DUCTILE IRON
DBL	DOUBLE
EXIST	EXISTING
FF	FINISHED FLOOR ELEVATION
HDPE	HIGH DENSITY POLYETHYLENE
MJ	MECHANICAL JOINT
MW	MONITORING WELL
PE	POLYETHYLENE
PROP	PROPOSED
PVC	POLYVINYL CHLORIDE
R&D	REMOVE & DISPOSE
TC	TOP OF CURB
TYP	TYPICAL
TBM	TEMPORARY BENCHMARK
UP	UTILITY POLE

LEGEND

EXISTING	DESCRIPTION	PROPOSED
	MAJOR CONTOUR	310
	MINOR CONTOUR	311
	TOP OF BANK	
	100' RIVER BANK OFFSET	
	200' RIVER BANK OFFSET	
	FLOODPLAIN BOUNDARY	
	25' WETLAND OFFSET	
	WETLAND BOUNDARY	
1A-27	WETLAND FLAG	
	BENCHMARK	
	CATCH BASIN	
M	MANHOLE	
	UTILITY POLE	
	GUY WIRE	
	EROSION CONTROL BARRIER	
	WATER BOUNDARY	
	TREELINE	
PW	UNDERGROUND WATER MAIN	PW
WV	WATER VALVE	
	COUPLING	
	HYDRANT	
RD RD	ROOF DRAIN	
SD	STORM DRAIN	
G	UNDERGROUND NATURAL GAS	G
OE	OVERHEAD ELECTRIC	
E	UNDERGROUND ELECTRIC	
	CHAIN LINK FENCE	
	DECIDUOUS TREE	
98/121	ASSESSORS MAP AND PARCEL	
	ELECTRICAL HANDHOLE	

EQUIPMENT REFUELING AND MAINTENANCE NOTES:

1. ALL ACTIVITIES OF THE CONTRACTOR SHALL BE IN STRICT CONFORMANCE WITH ALL APPLICABLE REGULATIONS AND GUIDELINES REGARDING STORAGE OR USE OF FUEL PRODUCTS.
2. SECONDARY CONTAINMENT MUST BE PROVIDED AT ALL TIMES DURING THE REFUELING PROCESS. NO TRANSFERRING OR REFUELING WILL BE ALLOWED OUTSIDE OF SECONDARY CONTAINMENT
3. ANY FUEL CONTAINERS BROUGHT ONTO THE SITE SHALL INCLUDE SECONDARY CONTAINMENT AT ALL TIMES. UNDER NO CIRCUMSTANCES SHALL FUEL OR OTHER LUBRICANTS BE STORED AT THE SITE OVERNIGHT.
4. MAINTENANCE OF CONSTRUCTION EQUIPMENT, INCLUDING WASHING OF CONSTRUCTION EQUIPMENT, SHALL NOT BE ALLOWED ON-SITE. CONSTRUCTION EQUIPMENT SHALL BE INSPECTED DAILY TO PREVENT THE ACCIDENTAL DISCHARGE OF OIL OR FUEL ONTO THE GROUND AT THE SITE.
5. ABSORBENT SPILL RESPONSE MATERIAL INCLUDING OIL ABSORBENT MATS AND SPILL BOOMS SHALL BE KEPT ON SITE AT ALL TIMES FOR USE IN THE EVENT OF SPILLS OR ACCIDENTAL DISCHARGES. SORBENT MATERIALS SHALL BE USED TO THE MAXIMUM EXTENT POSSIBLE TO CONTAIN OR REMOVE ANY MATERIALS SPILLED OUTSIDE OF SECONDARY CONTAINMENT STRUCTURES. NOTIFY THE OWNER AND ENGINEER IMMEDIATELY IN THE EVENT OF SPILLS OR ACCIDENTAL DISCHARGES.
6. THE CONTRACTOR SHALL SUBMIT A VEHICLE AND EQUIPMENT FUELING AND MAINTENANCE PLAN FOR THE PROJECT. THE CONTRACTOR SHALL ENSURE THAT ALL WORKERS ON SITE ARE FAMILIAR WITH THE PLAN AND THEIR RESPONSIBILITIES RELATIVE TO THE REFUELING AND MAINTENANCE OF EQUIPMENT AND THE STEPS NECESSARY IN THE EVENT OF SPILLS OR ACCIDENTAL DISCHARGES.

Tighe&Bond
Engineers | Environmental Specialists

Permit Set Not For Construction

Grafton Water District

Worcester Street Pump Station Replacement Project

Grafton, MA

VERIFY SCALE
BAR IS 1 INCH ON ORIGINAL DRAWING
0 — 1 INCH
IF NOT ONE INCH ON THIS SHEET, ADJUST SCALES ACCORDINGLY

MARK	DATE	DESCRIPTION

PROJECT NO:	G0676
DATE:	
FILE:	G0676-C-Permit Drawings.dwg
DRAWN BY:	DFV
CHECKED:	DT/LAS
APPROVED:	TJM

GENERAL NOTES, ABBREVIATIONS AND LEGEND

SCALE: NONE

G-002

Last Saved: 8/19/2019
Plotted On:Aug 19, 2019-7:40am By: TJGrace
Tighe & Bond:J:\G\G0676 Grafton Worcester St. Well\Drawings_Figures\AutoCAD\Sheet\Permit Drawings\G0676-C-Permit Drawings.dwg

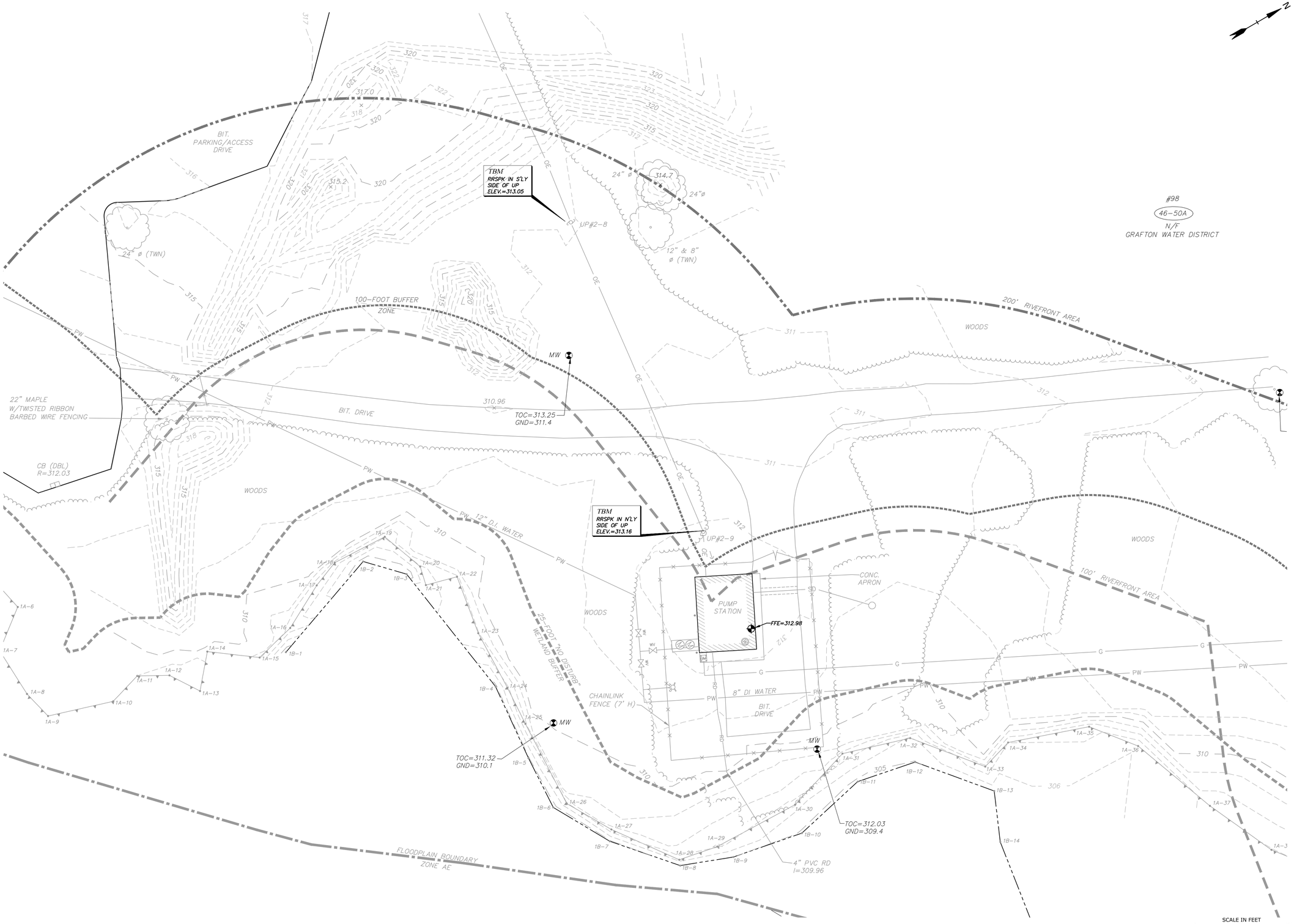

Tighe&Bond
Engineers | Environmental Specialists

Permit Set Not For Construction

Grafton Water District

Worcester Street Pump Station Replacement Project

Grafton, MA

VERIFY SCALE
BAR IS 1 INCH ON ORIGINAL DRAWING
0 ▬ 1 INCH
IF NOT ONE INCH ON THIS SHEET, ADJUST SCALES ACCORDINGLY

MARK	DATE	DESCRIPTION

PROJECT NO:	G0676
DATE:	
FILE:	G0676-C-Permit Drawings.dwg
DRAWN BY:	TJG
CHECKED:	DT/LAS
APPROVED:	TJM

EXISTING CONDITIONS SITE PLAN

SCALE: 1" = 20'

C-101

Last Saved: 8/19/2019
Plotted On:Aug 19, 2019-9:7:40am By: TJGrace
Tighe & Bond:J:\G\G0676 Grafton Worcester St. Well\Drawings_Figures\AutoCAD\Sheet\Permit Drawings\G0676-C-Permit Drawings.dwg

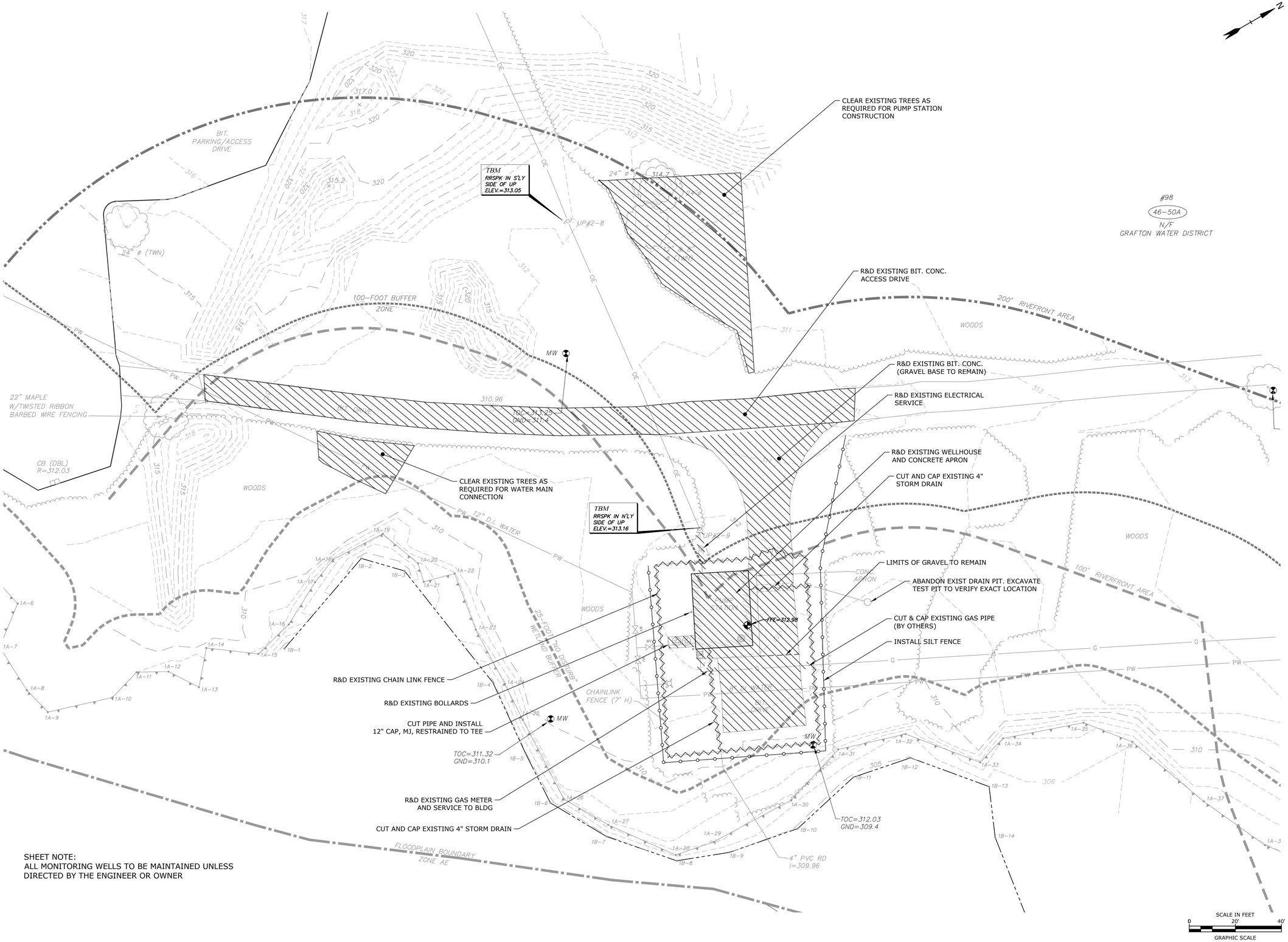

SHEET NOTE:
ALL MONITORING WELLS TO BE MAINTAINED UNLESS DIRECTED BY THE ENGINEER OR OWNER

Tighe&Bond
Engineers | Environmental Specialists

Permit Set Not For Construction

Grafton Water District

Worcester Street Pump Station Replacement Project

Grafton, MA

VERIFY SCALE
BAR IS 1 INCH ON ORIGINAL DRAWING
0 1 INCH
IF NOT ONE INCH ON THIS SHEET, ADJUST SCALES ACCORDINGLY

MARK	DATE	DESCRIPTION

PROJECT NO:	G0676
DATE:	
FILE:	G0676-C-Permit Drawings.dwg
DRAWN BY:	TJG
CHECKED:	DT/LAS
APPROVED:	TJM

DEMOLITION & SITE PREPARATION PLAN

SCALE: 1" = 20'

C-102

Last Saved: 8/19/2019
Plotted On:Aug 19, 2019-7:40am By: TJGrace
Tighe & Bond:J:\G\G0676 Grafton Worcester St. Well\Drawings_Figures\AutoCAD\Sheet\Permit Drawings\G0676-C-Permit Drawings.dwg

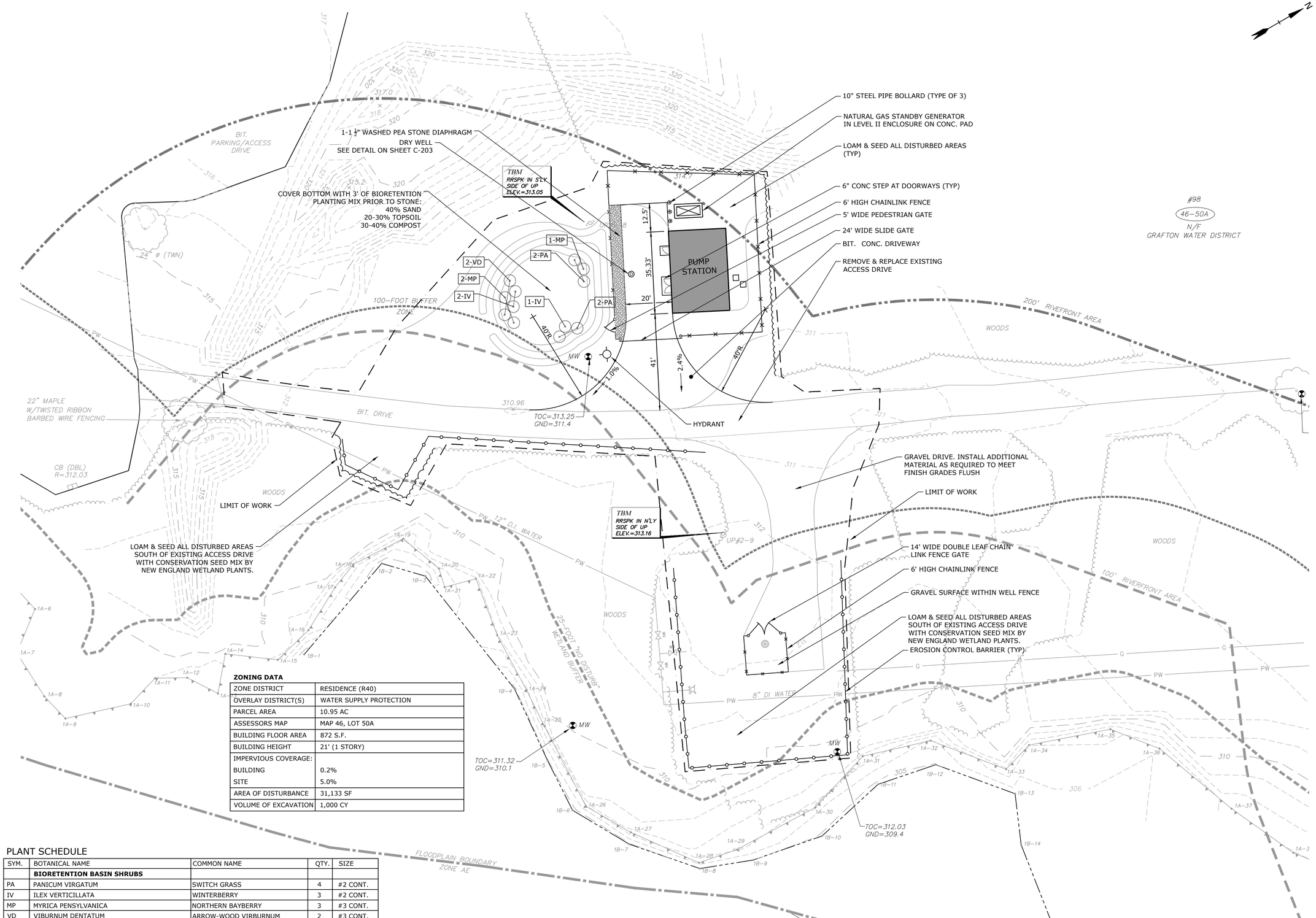

ZONING DATA

ZONE DISTRICT	RESIDENCE (R40)
OVERLAY DISTRICT(S)	WATER SUPPLY PROTECTION
PARCEL AREA	10.95 AC
ASSESSORS MAP	MAP 46, LOT 50A
BUILDING FLOOR AREA	872 S.F.
BUILDING HEIGHT	21' (1 STORY)
IMPERVIOUS COVERAGE:	
BUILDING	0.2%
SITE	5.0%
AREA OF DISTURBANCE	31,133 SF
VOLUME OF EXCAVATION	1,000 CY

PLANT SCHEDULE

SYM.	BOTANICAL NAME	COMMON NAME	QTY.	SIZE
	BIORETENTION BASIN SHRUBS			
PA	PANICUM VIRGATUM	SWITCH GRASS	4	#2 CONT.
IV	ILEX VERTICILLATA	WINTERBERRY	3	#2 CONT.
MP	MYRICA PENSYLVANICA	NORTHERN BAYBERRY	3	#3 CONT.
VD	VIBURNUM DENTATUM	ARROW-WOOD VIRBURNUM	2	#3 CONT.

CONT. = CONTAINER; CAL. = CALIPER

Tighe&Bond
Engineers | Environmental Specialists

Permit Set Not For Construction

Grafton Water District

Worcester Street Pump Station Replacement Project

Grafton, MA

VERIFY SCALE
BAR IS 1 INCH ON ORIGINAL DRAWING
0 1 INCH
IF NOT ONE INCH ON THIS SHEET, ADJUST SCALES ACCORDINGLY

MARK	DATE	DESCRIPTION

PROJECT NO:	G0676
DATE:	
FILE:	G0676-C-Permit Drawings.dwg
DRAWN BY:	TJG
CHECKED:	DT/LAS
APPROVED:	TJM

PROPOSED LAYOUT PLAN

SCALE: 1" = 20'

C-103

Last Saved: 8/19/2019
Plotted On:Aug 19, 2019-9:7:40am By: TJGrace
Tighe & Bond:J:\G\G0676 Grafton Worcester St. Well\Drawings_Figures\AutoCAD\Sheet\Permit Drawings\G0676-C-Permit Drawings.dwg

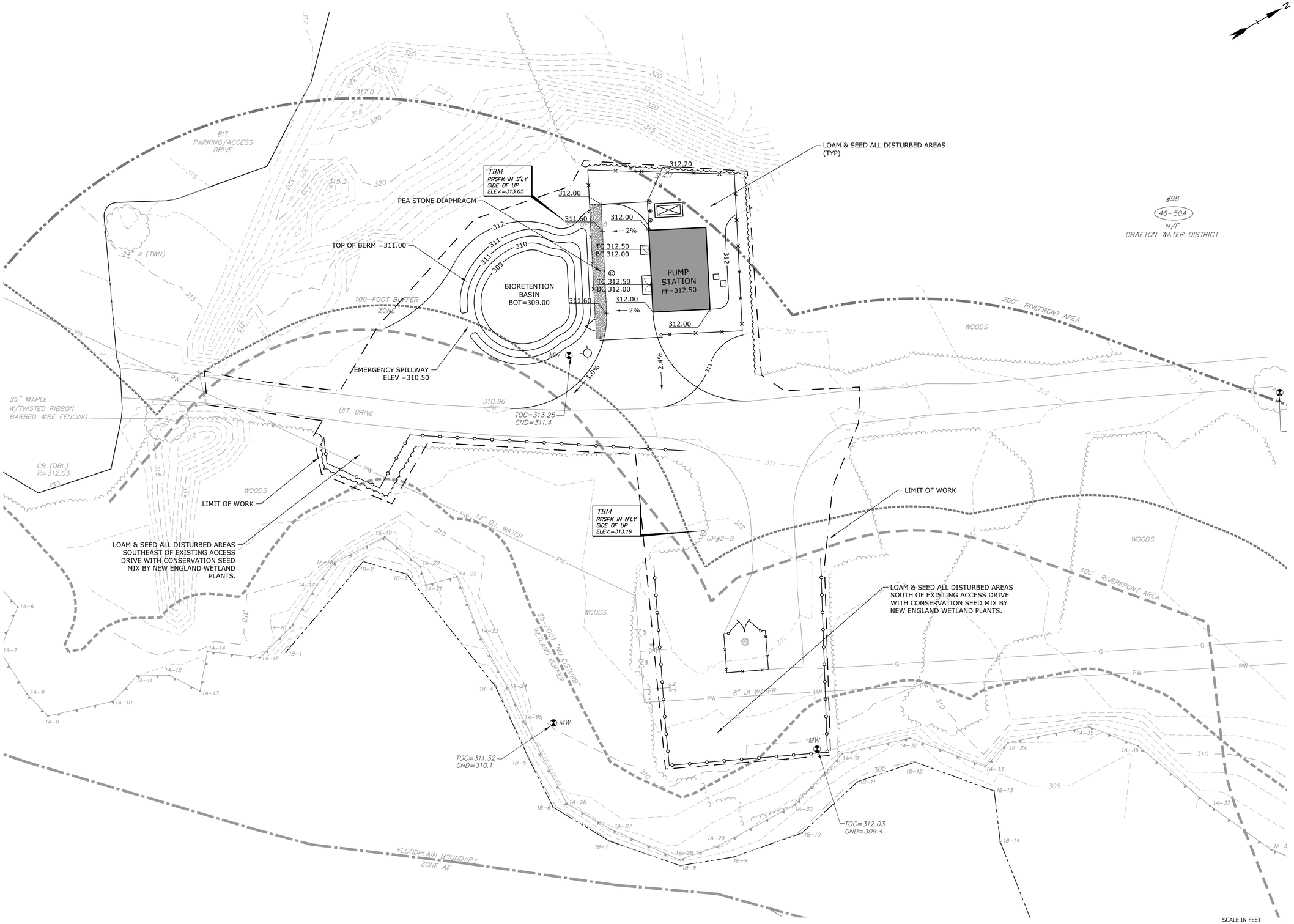

Tighe&Bond
Engineers | Environmental Specialists

Permit Set Not For Construction

Grafton Water District

Worcester Street Pump Station Replacement Project

Grafton, MA

VERIFY SCALE
BAR IS 1 INCH ON ORIGINAL DRAWING
0 ▬ 1 INCH
IF NOT ONE INCH ON THIS SHEET, ADJUST SCALES ACCORDINGLY

MARK	DATE	DESCRIPTION

PROJECT NO:	G0676
DATE:	
FILE:	G0676-C-Permit Drawings.dwg
DRAWN BY:	TJG
CHECKED:	DT/LAS
APPROVED:	TJM

PROPOSED GRADING PLAN

SCALE: 1" = 20'

C-104

Last Saved: 8/19/2019
Plotted On:Aug 19, 2019-7:41am By: TJGrace
Tighe & Bond:J:\G\G0676 Grafton Worcester St. Well\Drawings_Figures\AutoCAD\Sheet\Permit Drawings\G0676-C-Permit Drawings.dwg

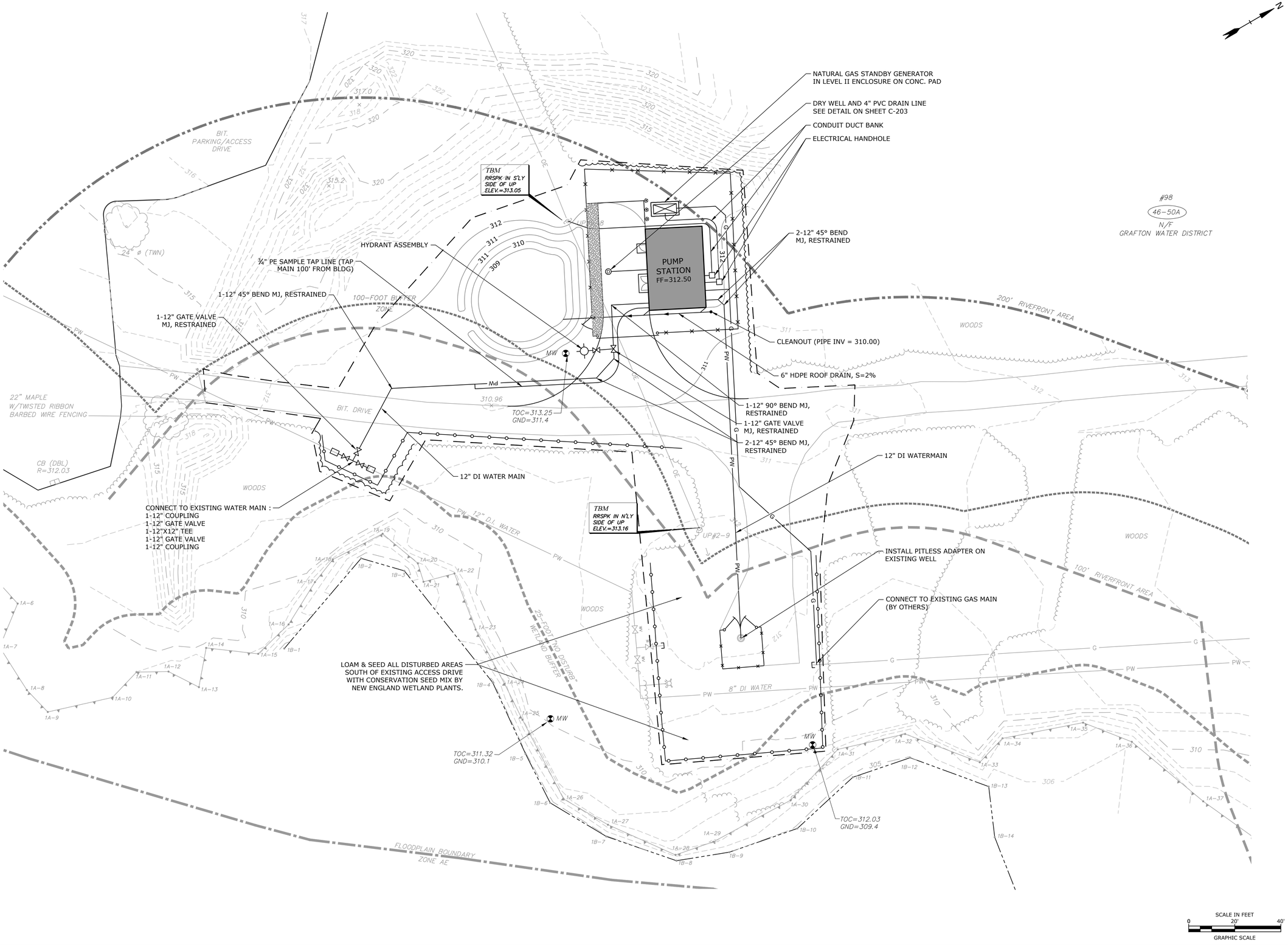

Tighe&Bond
Engineers | Environmental Specialists

Permit Set Not For Construction

Grafton Water District

Worcester Street Pump Station Replacement Project

Grafton, MA

VERIFY SCALE
BAR IS 1 INCH ON ORIGINAL DRAWING
0 1 INCH
IF NOT ONE INCH ON THIS SHEET, ADJUST SCALES ACCORDINGLY

MARK	DATE	DESCRIPTION

PROJECT NO:	G0676
DATE:	
FILE:	G0676-C-Permit Drawings.dwg
DRAWN BY:	TJG
CHECKED:	DT/LAS
APPROVED:	TJM

PROPOSED UTILITY PLAN

SCALE: 1" = 20'

C-105

Last Saved: 8/19/2019
Plotted On:Aug 19, 2019-7:41am By: TJGrace
Tighe & Bond:J:\G\G0676 Grafton Worcester St. Well\Drawings_Figures\AutoCAD\Sheet\Permit Drawings\G0676-C-Permit Drawings.dwg

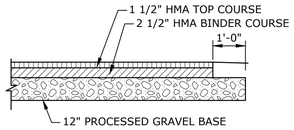

HMA DRIVEWAYS & PARKING AREAS
NO SCALE

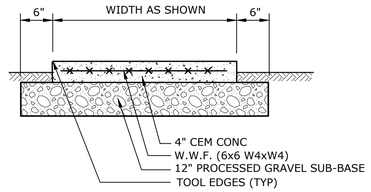

CONCRETE STEP
NO SCALE

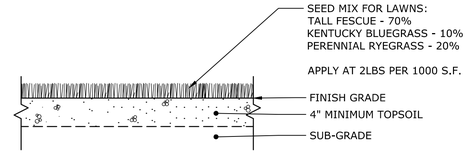

LAWN AREAS
NO SCALE

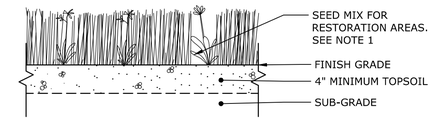

NOTES:
1) SEED MIX FOR RESTORATION AREAS: CONSERVATION SEED MIX INCLUDING A MIX OF GRASSES AND FORBS. NEW ENGLAND WILDFLOWER MIX - NEW ENGLAND WETLAND PLANTS, XERCES NORTHEASTERN POLLINATOR MIX - ERNST CONSERVATION SEEDS OR EQUAL. APPLICATION RATE AS RECOMMENDED BY SEED SOURCE.

RESTORATION AREAS
NO SCALE

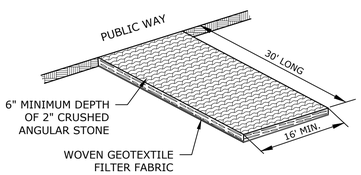

CONSTRUCTION ENTRANCE
NO SCALE

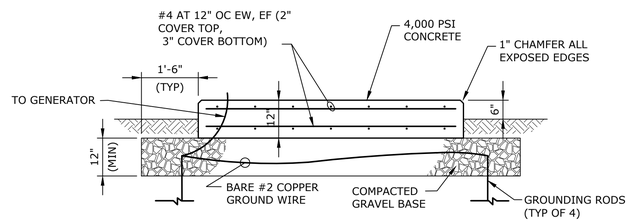

CONCRETE GENERATOR PAD
NO SCALE

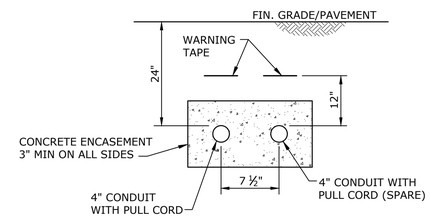

NOTE:
COORDINATE INSTALLATION WITH UTILITY.

CONDUIT DUCT BANK
NO SCALE

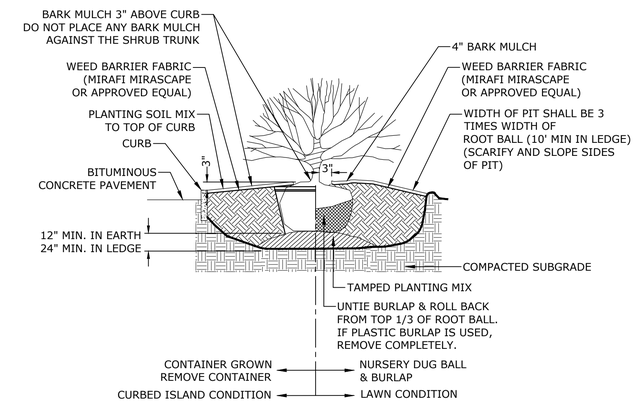

SHRUB PLANTING DETAIL
NO SCALE

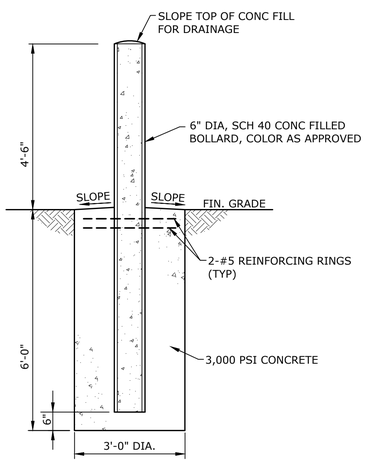

6" DIAMETER STEEL BOLLARD
NO SCALE

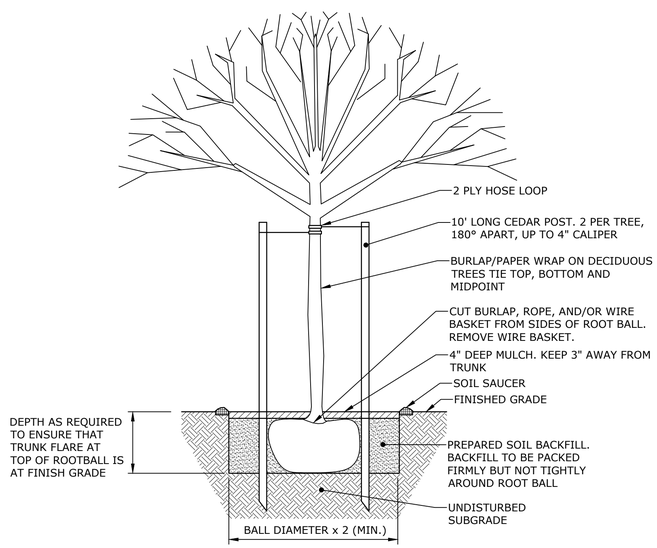

TREE PLANTING DETAIL
NO SCALE

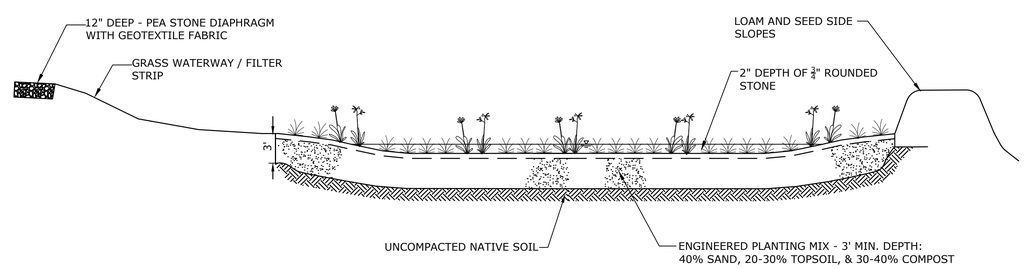

BIORETENTION BASIN SECTION
NO SCALE

Tighe&Bond
Engineers | Environmental Specialists

Permit Set
Not For
Construction

Grafton Water District

Worcester Street
Pump Station
Replacement
Project

Grafton, MA

VERIFY SCALE
BAR IS 1 INCH ON
ORIGINAL DRAWING
0 1 INCH
IF NOT ONE INCH ON
THIS SHEET, ADJUST
SCALES ACCORDINGLY

MARK	DATE	DESCRIPTION

PROJECT NO:	G0676
DATE:	
FILE:	G0676-C-Permit Drawings.dwg
DRAWN BY:	TJG
CHECKED:	DT
APPROVED:	TJM

SITE DETAILS - 1

SCALE: 1" = 20'

C-201

Last Saved: 8/15/2019
Plotted On:Aug 15, 2019-7:41am By: TJGrace
Tighe & Bond:J:\G\G0676 Grafton Worcester St. Well\Drawings_Figures\AutoCAD\Sheet\Permit Drawings\G0676-C-Permit Drawings.dwg

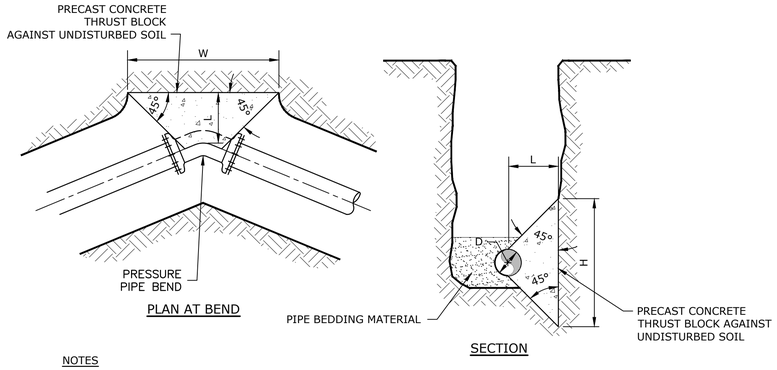

NOTES

1. CONCRETE SHALL BE PRECAST (3000 PSI).
2. MJ JOINTS SHALL HAVE RETAINER GLANDS.
3. EXERT CARE TO SHIELD HYDRANT BASE DRAIN HOLES DURING PLACEMENT OF THE CONCRETE THRUST BLOCK. VERIFY DRAIN HOLES AS OPEN AND FREE OF OBSTRUCTIONS PRIOR TO BACKFILLING.
4. EXERT CARE TO SHIELD ALL MECHANICAL JOINT GLANDS AND BOLTS DURING PLACEMENT OF CONCRETE THRUST BLOCK. ALL BOLTS AND GLANDS SHALL BE FREE AND UNOBSTRUCTED BEFORE BACKFILLING.
5. HYDRANT SHALL BE SET PLUMB. VERTICAL HYDRANT EXTENSIONS SHALL BE USED AS NECESSARY TO PROPERLY LOCATE THE BREAKAWAY FLANGE PER MANUFACTURER'S RECOMMENDATIONS.
6. PLACE POLYETHYLENE SHEETING OVER THE FITTINGS AND/OR HYDRANT BASE TO PREVENT DIRECT CONTACT OF CONCRETE WITH THE FITTING.

		CONCRETE THRUST BLOCK											
		11 1/4° BEND			22 1/2° BEND			45° BEND			TEE/DEAD END		
D	AREA (OUTSIDE DIA.)(IN SQ)	"L" (FT)	"H" (FT)	"W" (FT)	"L" (FT)	"H" (FT)	"W" (FT)	"L" (FT)	"H" (FT)	"W" (FT)	"L" (FT)	"H" (FT)	"W" (FT)
12"	136.8	1.3	2.1	0.7	1.9	2.8	1.0	2.6	4.0	1.3	3.0	4.6	1.5
8"	64.3	0.9	1.4	0.5	1.3	1.9	0.7	1.8	2.7	0.9	2.1	3.1	1.1
6"	37.4	0.7	1.0	0.4	1.0	1.5	0.5	1.4	2.0	0.7	1.6	2.3	0.8

CONCRETE THRUST BLOCK FOR HORIZONTAL BENDS AND TEES
NO SCALE

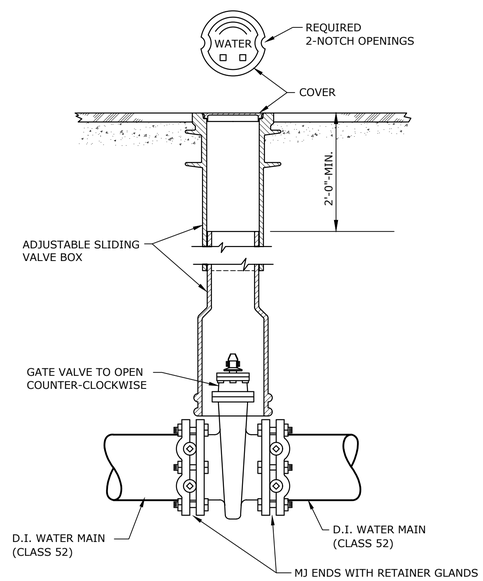

TYPICAL GATE VALVE INSTALLATION 12" & SMALLER

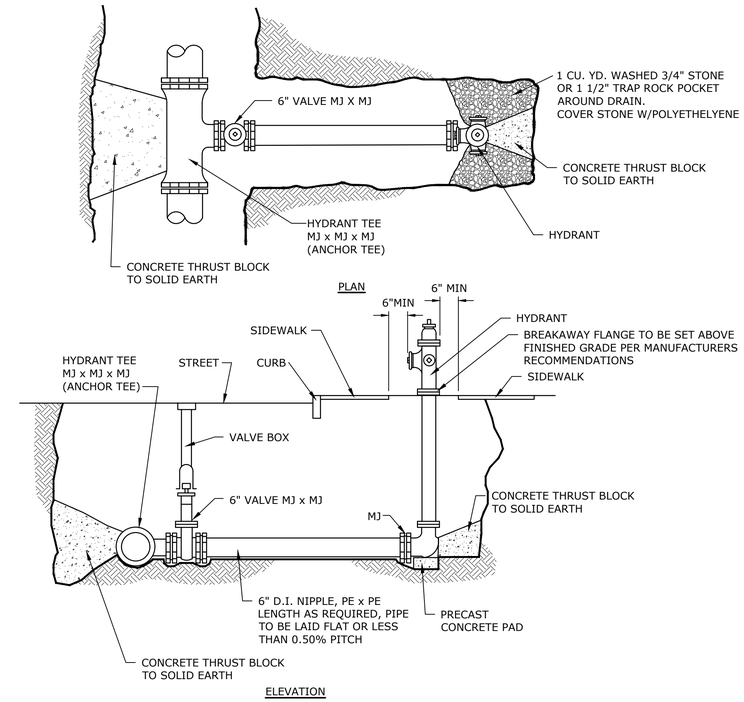

HYDRANT INSTALLATION
NO SCALE

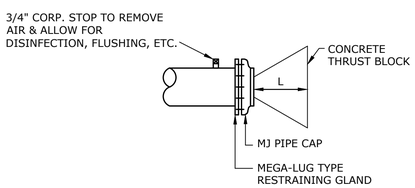

WATER MAIN CAPPING DETAIL
NO SCALE

SIZE (IN.)	FITTING	MINIMUM * RESTRAINED LENGTH, FT.
8"	90° BEND	19
8"	45° BEND	8
8"	22 1/2° BEND	4
8"	11 1/4° BEND	2
8"	DEAD END	39
8"	45° VERTICAL UP BEND	5
8"	45° VERTICAL DOWN BEND	16
8"	8" TEE	25
	12"x8" REDUCER	29
	8"X6" REDUCER	16
	10"X8" TEE	26
12"	90° BEND	26
12"	45° BEND	11
12"	22 1/2° BEND	6
12"	11 1/4° BEND	3

MINIMUM RESTRAINED LENGTH BASED ON DIPRA, "THRUST RESTRAINT DESIGN FOR DUCTILE IRON PIPE," 3rd EDITION, 1992.

FOLLOWING CONDITIONS APPLY:
SOIL TYPE: SAND SILT
MAX. PRESSURE: 200psi
TRENCH TYPE 4
BURIED DEPTH: 5'

*ALL RESTRAINED LENGTH FOR 6-INCH PIPE TO MATCH THOSE FOR 8-INCH PIPE SHOWN IN TABLE.

TABLE SUBJECT TO RECALCULATIONS BASED ON OBSERVED FIELD CONDITIONS.

MINIMUM RESTRAINED LENGTHS FOR DI PIPE

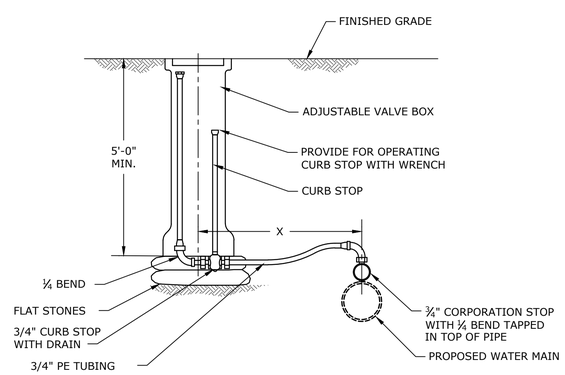

SAMPLE TAP DETAIL
NOT TO SCALE

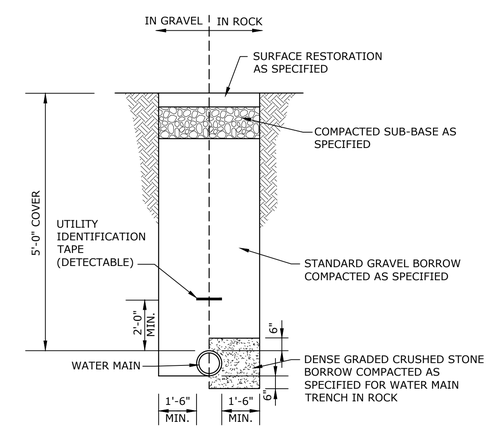

TYPICAL WATER MAIN TRENCH
NO SCALE

Tighe&Bond
Engineers | Environmental Specialists

Permit Set Not For Construction

Grafton Water District

Worcester Street Pump Station Replacement Project

Grafton, MA

VERIFY SCALE
BAR IS 1 INCH ON ORIGINAL DRAWING
0 1 INCH
IF NOT ONE INCH ON THIS SHEET, ADJUST SCALES ACCORDINGLY

MARK	DATE	DESCRIPTION

PROJECT NO:	G0676
DATE:	
FILE:	G0676-C-Permit Drawings.dwg
DRAWN BY:	DFV
CHECKED:	DT/LAS
APPROVED:	TJM

SITE DETAILS - 2

SCALE: 1" = 20'

C-202

Last Saved: 8/19/2019
Plotted On:Aug 19, 2019-7:41am By: TJGrace
Tighe & Bond:J:\G\G0676 Grafton Worcester St. Well\Drawings_Figures\AutoCAD\Sheet\Permit Drawings\G0676-C-Permit Drawings.dwg

EROSION CONTROL NOTES:

1. ALL EROSION CONTROL MEASURES SHOWN, SPECIFIED AND REQUIRED BY THE ENGINEER SHALL MEET THE GRAFTON CONSERVATION COMMISSION ORDER OF CONDITIONS AND SHALL BE INSTALLED PRIOR TO ANY CONSTRUCTION OR IMMEDIATELY UPON REQUEST. THE CONTRACTOR SHALL MAINTAIN ALL SUCH CONTROL MEASURES UNTIL FINAL SURFACE TREATMENTS ARE IN PLACE AND/OR UNTIL PERMANENT VEGETATION IS ESTABLISHED.
2. PRIOR TO STARTING WORK, CLEARLY STAKE WORK LIMIT LINE(S). DO NOT DISTURB VEGETATION AND TOPSOIL BEYOND THE PROPOSED LIMIT LINE. THE CONTRACTOR SHALL ALSO COORDINATE WITH THE ENGINEER THE LOCATIONS FOR THE TEMPORARY STOCKPILING OF TOPSOIL DURING CONSTRUCTION.
3. SILT TRAPPED AT BARRIERS SHALL BE REMOVED AND DISPOSED OF IN UPLAND AREAS OUTSIDE BUFFER ZONES. MATERIALS DEPOSITED IN ANY TEMPORARY SETTLING BASIN SHALL BE REMOVED AT THE COMPLETION OF PROJECT. ALL DISTURBED AREAS TO BE RESTORED.
4. ALL SILT-LADEN WATER MUST BE SETTLED OR FILTERED TO REMOVE SEDIMENTS PRIOR TO RELEASE TO THE WATERWAY. IN A SEDIMENTATION OR FILTER BAG LOCATED DOWNSTREAM OF THE DEWATERED AREA.
5. CONTRACTOR TO DEWATER AS NECESSARY TO KEEP CONSTRUCTION AREAS FREE OF WATER. CONTRACTOR SHALL DISCHARGE WATER FROM DEWATERING TO APPROPRIATE LOCATION WITHOUT SEDIMENTATION.
6. ANY SEDIMENT TRACKED ONTO PUBLIC RIGHT-OF-WAYS SHALL BE SWEPT AWAY AT THE END OF EACH DAY.

DEWATERING REQUIREMENTS

1. REFER TO THE SPECIFICATIONS FOR FURTHER DIRECTION ON DEWATERING AND CONTROL OF WATER.
2. IF THE WATER TABLE IS INTERCEPTED DURING EXCAVATION, WATER COLLECTED IN THE TRENCH SHALL BE PUMPED OUT SO THAT THE WORK CAN BE PERFORMED "IN THE DRY." PROVIDE ADEQUATELY SIZED DEWATERING EQUIPMENT WITH 100% BACKUP AND SEDIMENTATION/EROSION CONTROL STRUCTURES AS DETAILED ON THE CONTRACT DRAWINGS TO ENSURE CONSTRUCTION "IN THE DRY" AND ADEQUATELY PROTECT ADJACENT WETLAND AREAS AND WATERWAYS.
3. ALL GROUNDWATER REMOVED (PUMPED) FROM THE TRENCH EXCAVATION AND DISCHARGED TOWARD OR INTO DESIGNATED INLAND WETLANDS SHALL BE A "CLEAN DISCHARGE." PROVIDE WHATEVER DEVICES ARE REQUIRED TO ACHIEVE THE "CLEAN DISCHARGE." IF THE OWNER'S REPRESENTATIVE DETERMINES THE PUMPED DISCHARGE IS CLEAN (LESS THAN 50 NTU), THE FLOW CAN BE DIRECTED OVERLAND TOWARD THE RECEIVING BODY OF WATER. IF THE OWNER'S REPRESENTATIVE DETERMINES THAT THE FLOW IS NOT CLEAN, DIRECT THAT FLOW TO ONE OR MORE FILTRATION DEVICES FOR THE PURPOSE OF SUBSTANTIALLY REMOVING SUSPENDED SOLIDS FROM THE WATER. THE FILTRATION DEVICES SHALL BE AS SHOWN ON THE DRAWINGS OR APPROVED ALTERNATES SUGGESTED BY THE CONTRACTOR, OR AS REQUIRED BY THE LOCAL PERMITS.
4. OBTAIN ALL NECESSARY STATE AND LOCAL PERMITS RELATING TO DEWATERING ACTIVITIES.
5. DEWATERING DISCHARGE LOCATIONS ARE TO BE REVIEWED AND APPROVED BY THE OWNER'S REPRESENTATIVE.

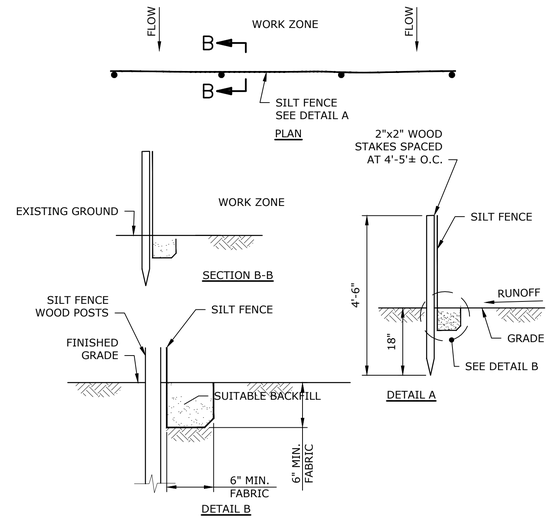

SILT FENCE
NO SCALE

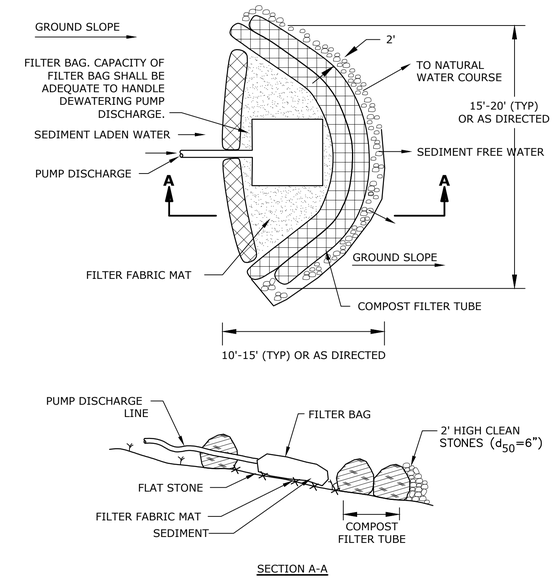

SEDIMENT TRAP
NO SCALE

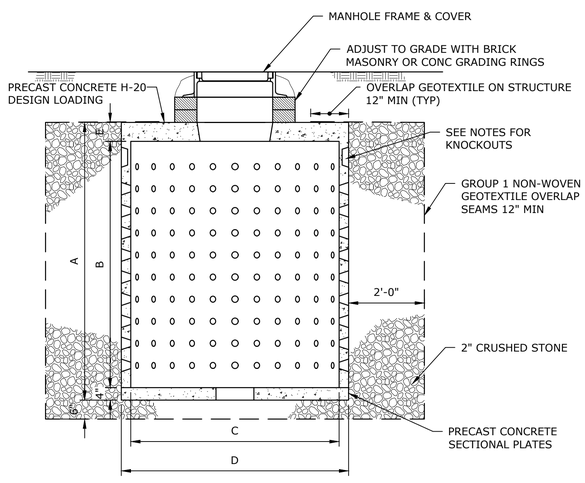

DIA	A	B	C	D	E
6'-0"	7'-4"	6'-6"	5'-6"	6'-0"	6"
8'-0"	5'-0"	4'-0"	7'-4"	8'-0"	8"
8'-0"	7'-0"	6'-0"	7'-4"	8'-0"	8"
8'-0"	9'-0"	8'-0"	7'-4"	8'-0"	8"
8'-0"	11'-0"	10'-0"	7'-4"	8'-0"	8"

NOTES:

1. FOR 6' DIA TWO 5"Ø KNOCKOUTS - INLET 11" FROM TOP OF STRUCTURE
2. FOR 8' DIA THREE 8"Ø KNOCKOUTS - INLET 21" FROM TOP OF STRUCTURE
   ONE 12"Ø KNOCKOUT - INLET 19" FROM TOP OF STRUCTURE

PRECAST CONCRETE DRY WELL
NO SCALE

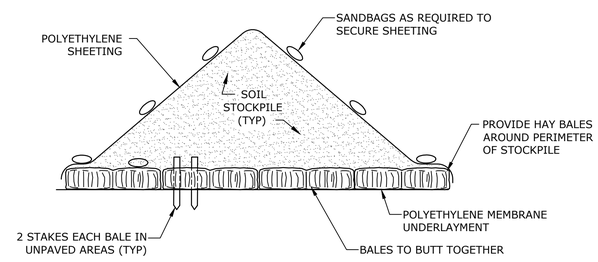

TEMPORARY CONTROLLED STOCKPILE AREA
NO SCALE

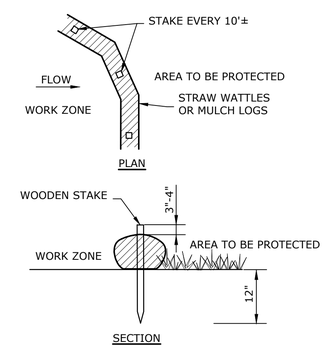

STRAW WATTLE OR MULCH LOG EROSION CONTROL BARRIER
NO SCALE

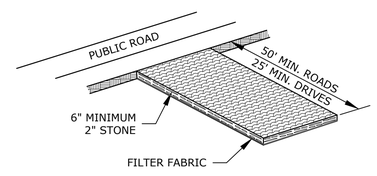

CONSTRUCTION ENTRANCE
NO SCALE

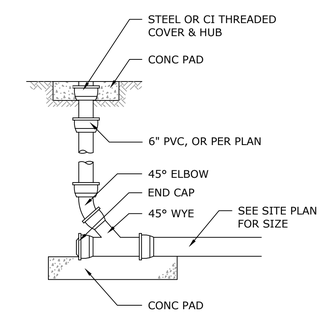

TYPICAL CLEAN OUT
NO SCALE

Tighe&Bond
Engineers | Environmental Specialists

Permit Set Not For Construction

Grafton Water District

Worcester Street Pump Station Replacement Project

Grafton, MA

VERIFY SCALE
BAR IS 1 INCH ON ORIGINAL DRAWING
0 — 1 INCH
IF NOT ONE INCH ON THIS SHEET, ADJUST SCALES ACCORDINGLY

MARK	DATE	DESCRIPTION

PROJECT NO:	G0676
DATE:	
FILE:	G0676-C-Permit Drawings.dwg
DRAWN BY:	DFV
CHECKED:	DT
APPROVED:	TJM

SITE DETAILS - 3

SCALE: 1" = 20'

C-203

Last Saved: 8/15/2019
Plotted On:Aug 15, 2019-7:41am By: TJGrace
Tighe & Bond:J:\G\G0676 Grafton Worcester St. Well\Drawings_Figures\AutoCAD\Sheet\Permit Drawings\G0676-C-Permit Drawings.dwg

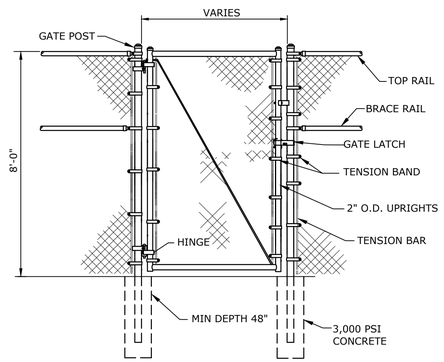

NOTES:

1. FOOTING WIDTH TO BE 4X POST WIDTH.
2. GATES SHALL BE MANUALLY OPERATED.
3. FABRIC AND POSTS SHALL BE BLACK PVC COATED PER ASTM F 668 2B.

CHAIN LINK FENCE PEDESTRIAN GATE
NO SCALE

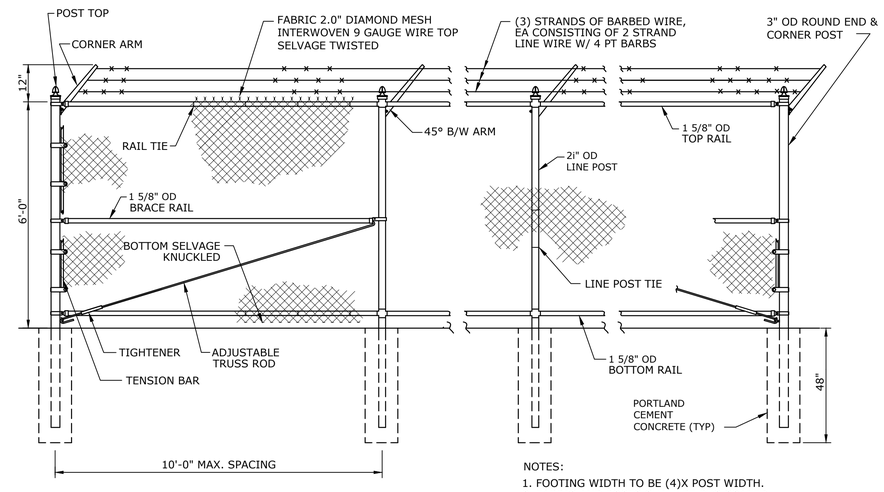

NOTES:

1. FOOTING WIDTH TO BE (4)X POST WIDTH.
2. FABRIC AND POSTS SHALL BE PVC COATED PER ASTM F 668 2B.

CHAIN LINK FENCE
NO SCALE

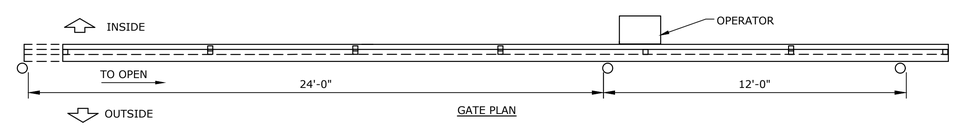

GATE PLAN

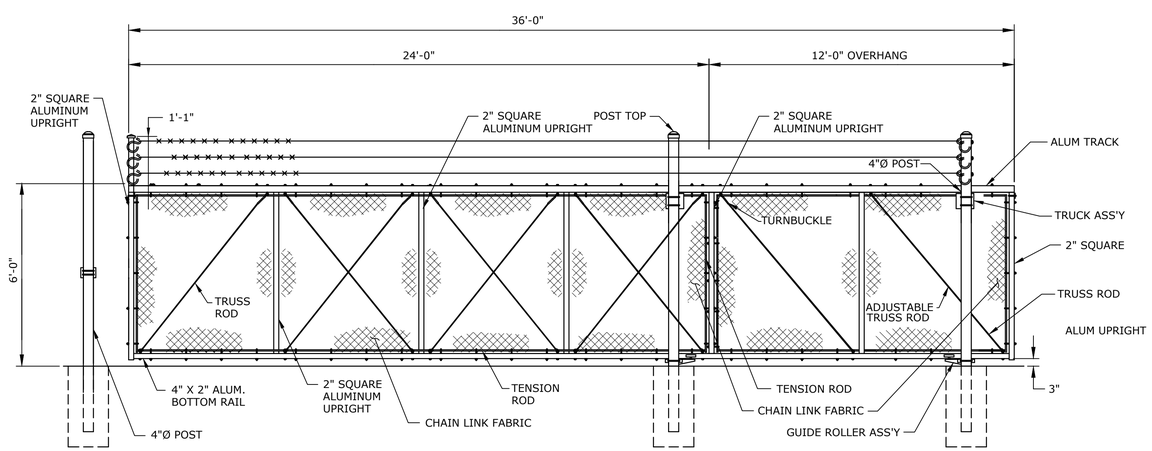

GATE ELEVATION

CHAIN LINK SLIDE GATE
NO SCALE

Tighe&Bond
Engineers | Environmental Specialists

Permit Set Not For Construction

Grafton Water District

Worcester Street Pump Station Replacement Project

Grafton, MA

VERIFY SCALE
BAR IS 1 INCH ON ORIGINAL DRAWING
0 1 INCH
IF NOT ONE INCH ON THIS SHEET, ADJUST SCALES ACCORDINGLY

MARK	DATE	DESCRIPTION

PROJECT NO:	G0676
DATE:	
FILE:	G0676-C-Permit Drawings.dwg
DRAWN BY:	TJG
CHECKED:	DT
APPROVED:	TJM

SITE DETAILS - 4

SCALE: 1" = 20'

C-204

Last Saved: 8/19/2019
Plotted On:Aug 19, 2019-7:41am By: TJGrace
Tighe & Bond:J:\G\G0676 Grafton Worcester St. Well\Drawings_Figures\AutoCAD\Sheet\Permit Drawings\G0676-C-Permit Drawings.dwg

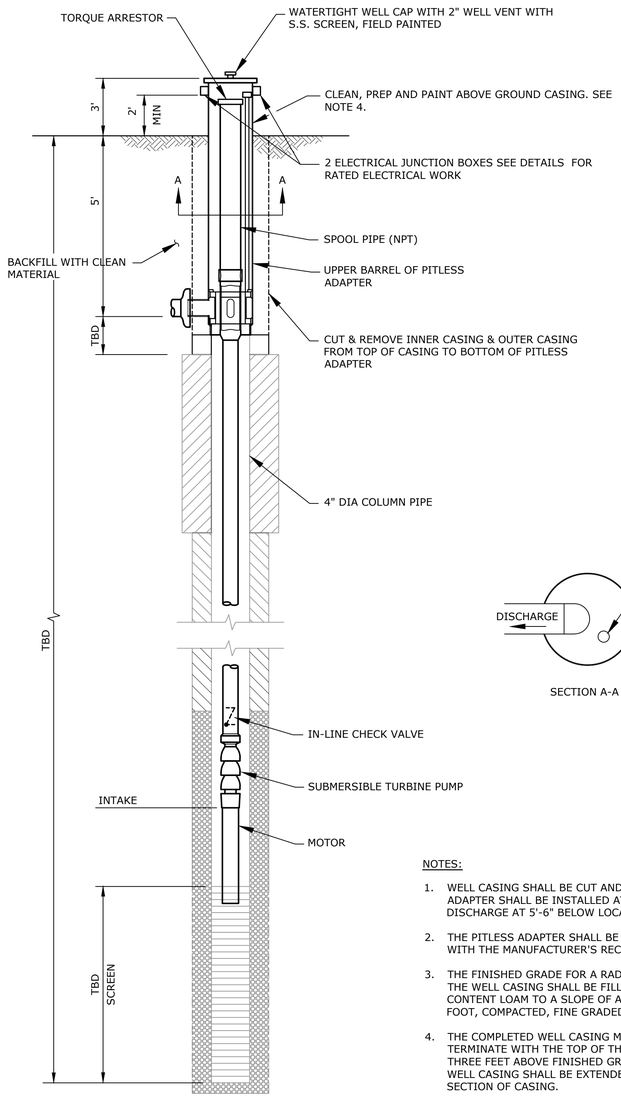

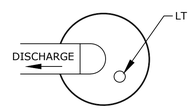

SECTION A-A

NOTES:

1. WELL CASING SHALL BE CUT AND CAPPED. A PITLESS ADAPTER SHALL BE INSTALLED AT CENTERLINE OF DISCHARGE AT 5'-6" BELOW LOCAL GROUND ELEVATION.
2. THE PITLESS ADAPTER SHALL BE SIZED IN ACCORDANCE WITH THE MANUFACTURER'S RECOMMENDATIONS.
3. THE FINISHED GRADE FOR A RADIUS OF 5 FEET AROUND THE WELL CASING SHALL BE FILLED WITH A HIGH CLAY CONTENT LOAM TO A SLOPE OF ABOUT ONE INCH PER FOOT, COMPACTED, FINE GRADED AND SEEDED.
4. THE COMPLETED WELL CASING MODIFICATION SHALL TERMINATE WITH THE TOP OF THE WELL CAP AT LEAST THREE FEET ABOVE FINISHED GRADE. IF NECESSARY, THE WELL CASING SHALL BE EXTENDED WITH A WELDED SECTION OF CASING.

WELL CONVERSION MODIFICATIONS - WELLHEAD PITLESS ADAPTER CONNECTION AND GRAVEL PACKED WELL DETAIL

NO SCALE

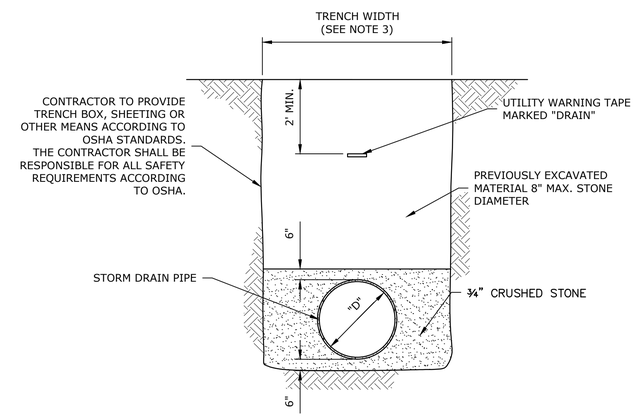

NOTES:

1. COMPACT ALL BACKFILL MATERIAL WITH VIBRATORY PLATE EQUIPMENT (MINIMUM TWO PASSES) TO A MINIMUM DENSITY OF 95 PERCENT OF THE STANDARD PROCTOR DENSITY AS DETERMINED BY ASTM D698.
2. PLACE BACKFILL MATERIAL IN MAXIMUM ONE FOOT LIFTS.
3. FOR PIPES LESS THAN 24" IN DIAMETER THE TRENCH WIDTH SHALL BE 5.0'. FOR PIPES 24" IN DIAMETER AND GREATER, TRENCH WIDTH SHALL BE THE PIPE DIAMETER + 3.0'

TYPICAL DRAIN LINE AND TRENCH SECTION

NO SCALE

Tighe&Bond
Engineers | Environmental Specialists

Permit Set Not For Construction

Grafton Water District

Worcester Street Pump Station Replacement Project

Grafton, MA

VERIFY SCALE
BAR IS 1 INCH ON ORIGINAL DRAWING
0 1 INCH
IF NOT ONE INCH ON THIS SHEET, ADJUST SCALES ACCORDINGLY

MARK	DATE	DESCRIPTION

PROJECT NO:	G0676
DATE:	
FILE:	G0676-C-Permit Drawings.dwg
DRAWN BY:	TJG
CHECKED:	DT
APPROVED:	TJM

SITE DETAILS - 5

SCALE: 1" = 20'

C-205

Last Saved: 8/19/2019
Plotted On:Aug 19, 2019-7:42am By: TJGrace
Tighe & Bond:J:\G\G0676 Grafton Worcester St. Well\Drawings_Figures\AutoCAD\Sheet\Permit Drawings\G0676-C-Permit Drawings.dwg

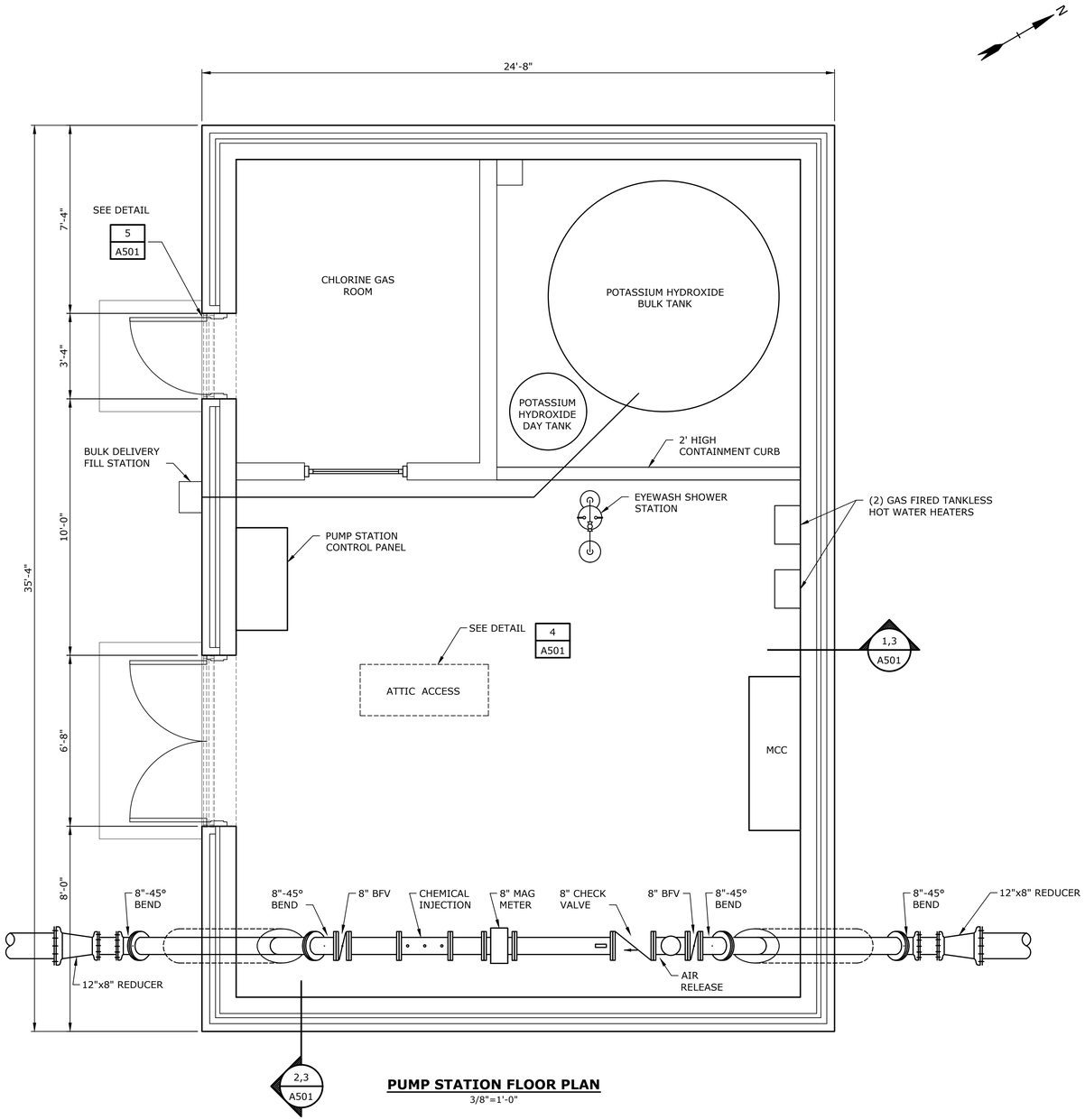

PUMP STATION FLOOR PLAN

3/8"=1'-0"

Tighe&Bond
www.tighebond.com

Grafton Water District

Worcester Street Pump Station Replacement Project

Grafton, MA

VERIFY SCALE
BAR IS 1 INCH ON ORIGINAL DRAWING
0 1 INCH
IF NOT ONE INCH ON THIS SHEET, ADJUST SCALES ACCORDINGLY

MARK	DATE	DESCRIPTION

PROJECT NO:	G0676
DATE:	
FILE: G0676-A-101.dwg	
DRAWN BY:	TMP
CHECKED:	LAS
APPROVED:	TJM

PUMP STATION FLOOR PLAN

SCALE: 3/8"=1'-0"

A-101
SHEET 8 OF 11

Last Saved: 2/25/2019
Plotted On:Feb 19, 2019-7:45am By: TJGrace
Tighe & Bond:J:\G\G0676 Grafton Worcester St. Well\Drawings_Figures\AutoCAD\Sheet\G0676-A-101.dwg

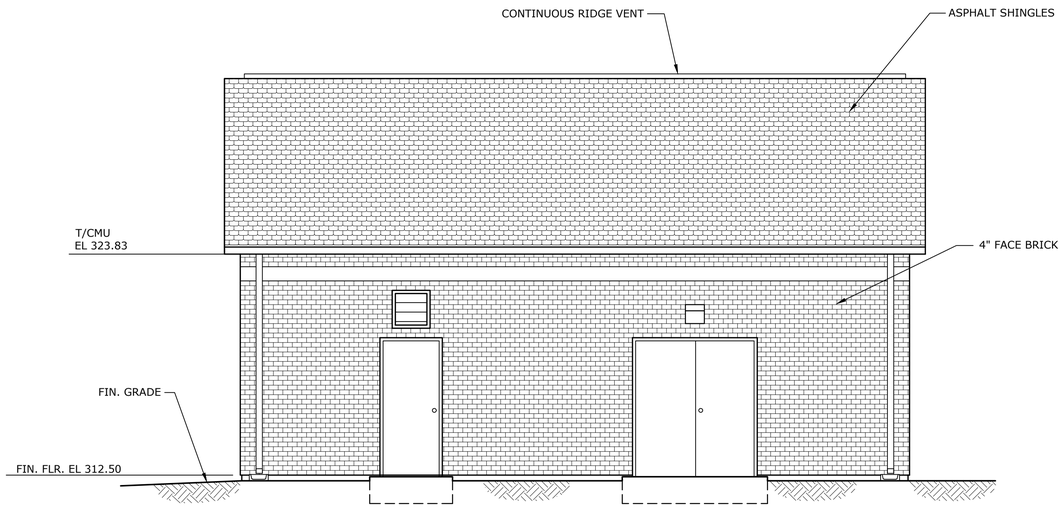

SOUTH ELEVATION
1/8"=1'-0"

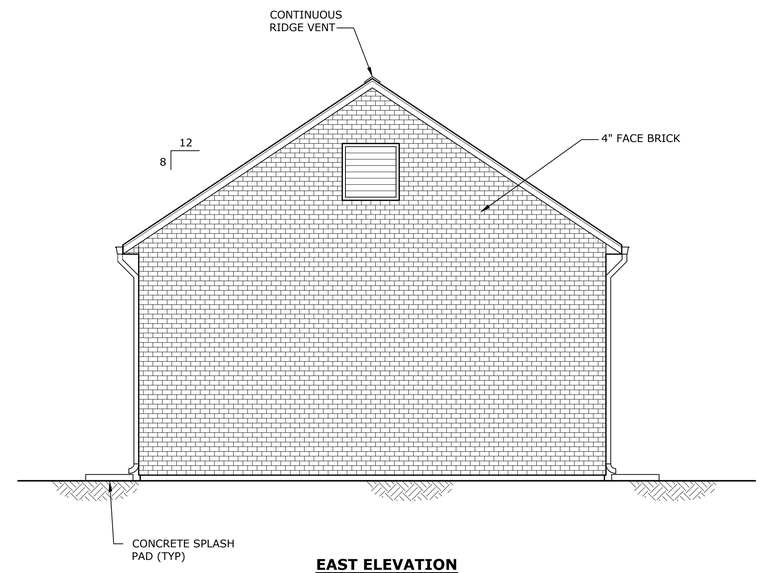

EAST ELEVATION
1/8"=1'-0"

Tighe&Bond
www.tighebond.com

Grafton Water District

Worcester Street Pump Station Replacement Project

Grafton, MA

VERIFY SCALE
BAR IS 1 INCH ON ORIGINAL DRAWING
0 1 INCH
IF NOT ONE INCH ON THIS SHEET, ADJUST SCALES ACCORDINGLY

MARK	DATE	DESCRIPTION

PROJECT NO:	G0676
DATE:	
FILE: G0676-A-201.dwg	
DRAWN BY:	TMP
CHECKED:	LAS
APPROVED:	TJM

PUMP STATION
EXTERIOR ELEVATIONS

SCALE: 1/8"=1'-0"

A-201

Last Saved: 8/19/2019
Plotted On:Aug 19, 2019-12:05pm By: TMP
Tighe & Bond:J:\G\G0676 Grafton Worcester St. Well\Drawings_Figures\AutoCAD\Sheet\G0676-A-201.dwg