COPY EXHIBIT #6

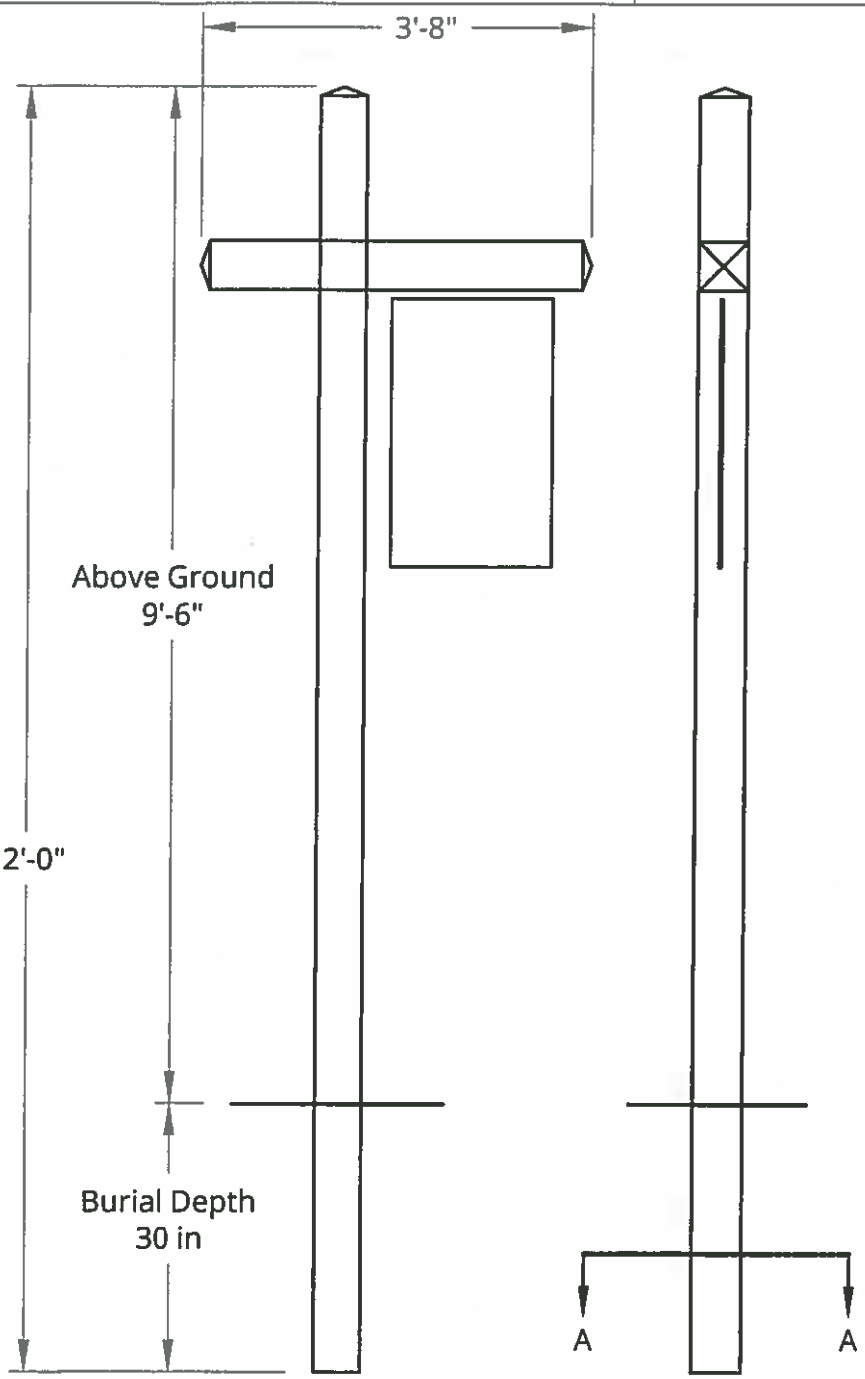

SECTION A - A

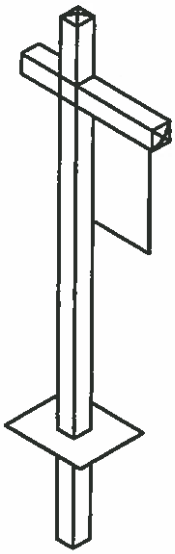

SCALE 1:40

RECEIVED
OCT 19 2018
PLANNING BOARD
GRAFTON, MA

UNLESS OTHERWISE SPECIFIED, DIMENSIONS ARE IN INCHES .XX = ± 0- .XXX = ± .00- .XXXX = ± .000- ANGULAR = ± ° FRACTIONAL = ± SURFACE FINISH √		NAME	DATE
	DRAWN	Robert Aberg	07/06/2018
	CHECKED		
	APPROVED	—	—
DO NOT SCALE DRAWING			
BREAK ALL SHARP EDGES AND REMOVE BURRS			
THIRD ANGLE PROJECTION	MATERIAL	FINISH	

TITLE

SIZE	DWG NO.	REV.
A	----	-

SCALE	WEIGHT	SHEET
1:20		1 of 1