COPY

EBI Consulting
environmental | engineering | due diligence

21 B Street
Burlington, MA 01803
Tel: (781) 273-2500
Fax: (781) 273-3311
www.ebiconsulting.com

January 16, 2018

Mr. John Lawrence
T-Mobile USA
c/o Centerline Communications LLC
95 Ryan Drive
Suite 1
Raynham, MA 02767

Subject: **Federal Aviation Administration (FAA) Compliance Results**
Proposed T-Mobile USA Project
Site No. 4WL0968A / Leland Hill Water Tank
29 Leland Hill Road
Grafton, MA 01757
EBI Project No. 6117007153

Dear Mr. Lawrence:

Enclosed please find the results of the Federal Aviation Administration (FAA) Compliance studies for the above-referenced site. The studies were completed based on information provided by Centerline Communications LLC on behalf of T-Mobile USA, and gathered from the Land Survey and Site Plans, attached as Appendix A.

EBI utilized both commercially available and publicly accessible software that runs algorithms in accordance with FAA glide-slope calculations, referenced in Federal Aviation Regulation (FAR) Part 77 and FCC Rulepart 47 CFR 17, to determine the need for filing with the FAA and if registration with the FCC is required. For this site, our analysis demonstrated that notice to the FAA and an Antenna Structure Registration with the FCC are not required. Thus, the site may proceed from an FAA Compliance perspective.

If the proposed project location or proposed height of the structure changes, please notify EBI Consulting, and we will be happy to conduct FAA Compliance studies based on the changes.

Land Survey and Site Plans – Appendix A

Latitude (NAD 83): 42° 10' 34.31" N
Longitude (NAD 83): 71° 42' 13.67" W
Site Ground Elevation (AMSL): 415 feet
Proposed Structure Height (AGL): 70 feet

Airspace© Studies – Appendix C

PASS. This site passed all Airspace studies, and notice to the FAA is not required.

FCC TOWAIR – Appendix D

PASS. This site does not require FCC registration based on the 6.10-meter (20-foot) rule. This determination expires on July 16, 2019.

EXHIBIT 21

RECEIVED
APR - 6 2018
PLANNING BOARD
GRAFTON, MA

Thank you for the opportunity to be of service to Centerline Communications LLC (on behalf of T-Mobile USA), and please don't hesitate to contact us with any questions or if we can assist with any of your future regulatory needs.

Respectfully Submitted,

Mr. Chris Adams
Author/FAA Specialist
TEL: 603-845-6596

Ms. Kelly Benson
T-Mobile USA Program Manager
TEL: 781-418-2310

Appendix A: Land Survey and Site Plans
Appendix B: Site Location Map
Appendix C: Airspace© Studies
Appendix D: FCC TOWAIR Results
Appendix E: Existing FAA/FCC ASR Documentation

APPENDIX A:
Land Survey and Site Plans

SITE NAME: LELAND HILL WATER TANK

29 LELAND HILL ROAD
GRAFTON, MA 01757
WORCESTER COUNTY

SITE NUMBER: 4WL0968A

RF DESIGN GUIDELINE: 707C TOWER

T-MOBILE TECHNICIAN SITE SAFETY NOTES

LOCATION	SPECIAL RESTRICTIONS
SECTOR A: ANTENNA/RRH	ACCESS NOT PERMITTED
SECTOR B: ANTENNA/RRH	ACCESS NOT PERMITTED
SECTOR C: ANTENNA/RRH	ACCESS NOT PERMITTED
GPS/LMU:	UNRESTRICTED CAUTION: OSHA-APPROVED PORTABLE 8' STEP-LADDER REQUIRED
RADIO CABINETS:	UNRESTRICTED
PPC DISCONNECT:	UNRESTRICTED
MAIN CIRCUIT D/C:	UNRESTRICTED
NIU/T DEMARC:	UNRESTRICTED
OTHER/SPECIAL:	NONE

GENERAL NOTES

THIS DOCUMENT IS THE CREATION, DESIGN, PROPERTY AND COPYRIGHTED WORK OF T-MOBILE. ANY DUPLICATION OR USE WITHOUT EXPRESS WRITTEN CONSENT IS STRICTLY PROHIBITED. DUPLICATION AND USE BY GOVERNMENT AGENCIES FOR THE PURPOSES OF CONDUCTING THEIR LAWFULLY AUTHORIZED REGULATORY AND ADMINISTRATIVE FUNCTIONS IS SPECIFICALLY ALLOWED.

THE FACILITY IS AN UNMANNED PRIVATE AND SECURED EQUIPMENT INSTALLATION. IT IS ONLY ACCESSED BY TRAINED TECHNICIANS FOR PERIODIC ROUTINE MAINTENANCE AND THEREFORE DOES NOT REQUIRE ANY WATER OR SANITARY SEWER SERVICE. THE FACILITY IS NOT GOVERNED BY REGULATIONS REQUIRING PUBLIC ACCESS PER ADA REQUIREMENTS.

CONTRACTOR SHALL VERIFY ALL PLANS AND EXISTING DIMENSIONS AND CONDITIONS ON THE JOB SITE AND SHALL IMMEDIATELY NOTIFY THE T-MOBILE NORTHEAST, LLC REPRESENTATIVE IN WRITING OF DISCREPANCIES BEFORE PROCEEDING WITH THE WORK OR BE RESPONSIBLE FOR SAME.

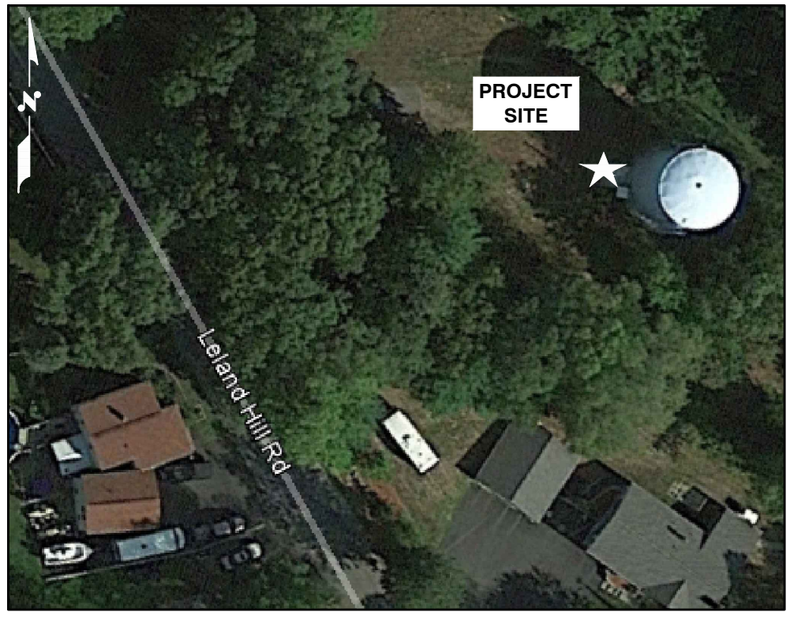

PROJECT SUMMARY

SCOPE OF WORK:	UNMANNED TELECOMMUNICATIONS FACILITY T-MOBILE EQUIPMENT INSTALLATION
ZONING JURISDICTION: (TOWN OF GRAFTON)	BASED ON INFORMATION PROVIDED BY T-MOBILE, THIS TELECOMMUNICATIONS EQUIPMENT DEPLOYMENT IS AN ELIGIBLE FACILITY UNDER THE TAX RELIEF ACT OF 2012, 47 USC 1455(A), AND IS SUBJECT TO AN EXPEDITED ELIGIBLE FACILITIES REQUEST/REVIEW AND ZONING PRE-EMPTION FOR LOCAL DISCRETIONARY PERMITS (VARIANCE, SPECIAL PERMIT, SITE PLAN REVIEW).
SITE ADDRESS:	29 LELAND HILL ROAD GRAFTON, MA 01757
LATITUDE:	42° 10' 34.31"
LONGITUDE:	71° 42' 13.67"
JURISDICTION:	NATIONAL, STATE & LOCAL CODES OR ORDINANCES
CURRENT USE:	TOWN WATER TANK
PROPOSED USE:	TELECOMMUNICATIONS FACILITY

APPROVALS

PROJECT MANAGER	DATE
CONSTRUCTION	DATE
RF ENGINEERING	DATE
ZONING / SITE ACQ.	DATE
OPERATIONS	DATE
LANDLORD	DATE

72 HOURS

CALL
BEFORE YOU DIG
CALL TOLL FREE 1-888-DIG-SAFE
OR CALL 811

UNDERGROUND SERVICE ALERT

DRAWING INDEX

SHEET NO.	DESCRIPTION	REV.
T-1	TITLE SHEET	2
GN-1	GENERAL NOTES	2
A-1	COMPOUND PLAN, EQUIPMENT PLAN & TOWER ELEVATION	2
A-2	TOWER EQUIPMENT DETAILS	2
A-3	GROUND EQUIPMENT DETAILS	2
A-4	DETAILS	2
A-5	AUXILIARY POWER DETAILS	2
SN-1	SPECIAL INSPECTIONS NOTES	2
S-1	CABLE TRAY DETAILS	2
S-2	PROPOSED ANTENNA FRAME	2
S-3	PROPOSED ANTENNA FRAME	2
E-1	ELECTRICAL DETAILS & NOTES	2
G-1	GROUNDING SCHEMATIC & RISER DIAGRAM	2
G-2	GROUNDING DETAILS & NOTES	2

T-MOBILE NORTHEAST LLC
15 COMMERCE WAY, SUITE B
NORTON, MA 02766
OFFICE: (508) 286-2700
FAX: (508) 286-2893

CENTERLINE COMMUNICATIONS
95 RYAN DRIVE #1
RAYNHAM, MA 02767

HUDSON Design Group LLC
45 BEECHWOOD DRIVE
N. ANDOVER, MA 01845
TEL: (978) 557-5553
FAX: (978) 336-5586

COMMONWEALTH OF MASSACHUSETTS
DEREK J. CREASER
CIVIL
No. 49195
REGISTERED PROFESSIONAL ENGINEER

CHECKED BY: RP

APPROVED BY: DJC

SUBMITTALS

REV.	DATE	DESCRIPTION	BY
2	11/15/17	REVISED FOR CONSTRUCTION	VP
1	04/26/17	ISSUED FOR CONSTRUCTION	VP
0	03/08/17	ISSUED FOR PERMITTING	VP/HH

SITE NUMBER:
4WL0968A
SITE NAME:
LELAND HILL WATER TANK
SITE ADDRESS:
29 LELAND HILL ROAD
GRAFTON, MA 01757
WORCESTER COUNTY

SHEET TITLE
TITLE SHEET

SHEET NUMBER
T-1

GROUNDING NOTES

1. THE SUBCONTRACTOR SHALL REVIEW AND INSPECT THE EXISTING FACILITY GROUNDING SYSTEM AND LIGHTNING PROTECTION SYSTEM (AS DESIGNED AND INSTALLED) FOR STRICT COMPLIANCE WITH THE NEC (AS ADOPTED BY THE AHJ), THE SITE-SPECIFIC (UL, LPI, OR NFPA) LIGHTING PROTECTION CODE, AND GENERAL COMPLIANCE WITH TELCORDIA AND TIA GROUNDING STANDARDS. THE SUBCONTRACTOR SHALL REPORT ANY VIOLATIONS OR ADVERSE FINDINGS TO THE CONTRACTOR FOR RESOLUTION.

2. ALL GROUND ELECTRODE SYSTEMS (INCLUDING TELECOMMUNICATION, RADIO, LIGHTNING PROTECTION, AND AC POWER GES'S) SHALL BE BONDED TOGETHER, AT OR BELOW GRADE, BY TWO OR MORE COPPER BONDING CONDUCTORS IN ACCORDANCE WITH THE NEC.

3. THE SUBCONTRACTOR SHALL PERFORM IEEE FALL-OF-POTENTIAL RESISTANCE TO EARTH TESTING (PER IEEE 1100 AND 81) FOR NEW GROUND ELECTRODE SYSTEMS. THE SUBCONTRACTOR SHALL FURNISH AND INSTALL SUPPLEMENTAL GROUND ELECTRODES AS NEEDED TO ACHIEVE A TEST RESULT OF 5 OHMS OR LESS.

4. METAL RACEWAY SHALL NOT BE USED AS THE NEC REQUIRED EQUIPMENT GROUND CONDUCTOR. STRANDED COPPER CONDUCTORS WITH GREEN INSULATION, SIZED IN ACCORDANCE WITH THE NEC, SHALL BE FURNISHED AND INSTALLED WITH THE POWER CIRCUITS TO BTS EQUIPMENT.

5. EACH BTS CABINET FRAME SHALL BE DIRECTLY CONNECTED TO THE MASTER GROUND BAR WITH GREEN INSULATED SUPPLEMENTAL EQUIPMENT GROUND WIRES, 6 AWG STRANDED COPPER OR LARGER FOR INDOOR BTS 2 AWG STRANDED COPPER FOR OUTDOOR BTS.

6. EXOTHERMIC WELDS SHALL BE USED FOR ALL GROUNDING CONNECTIONS BELOW GRADE.

7. APPROVED ANTIOXIDANT COATINGS (I.E., CONDUCTIVE GEL OR PASTE) SHALL BE USED ON ALL COMPRESSION AND BOLTED GROUND CONNECTIONS.

8. ICE BRIDGE BONDING CONDUCTORS SHALL BE EXOTHERMICALLY BONDED OR BOLTED TO GROUND BAR.

9. ALUMINUM CONDUCTOR OR COPPER CLAD STEEL CONDUCTOR SHALL NOT BE USED FOR GROUNDING CONNECTIONS.

10. MISCELLANEOUS ELECTRICAL AND NON-ELECTRICAL METAL BOXES, FRAMES AND SUPPORTS SHALL BE BONDED TO THE GROUND RING, IN ACCORDANCE WITH THE NEC.

11. METAL CONDUIT SHALL BE MADE ELECTRICALLY CONTINUOUS WITH LISTED BONDING FITTINGS OR BY BONDING ACROSS THE DISCONTINUITY WITH 6 AWS COPPER WIRE UL APPROVED GROUNDING TYPE CONDUIT CLAMPS.

12. ALL NEW STRUCTURES WITH A FOUNDATION AND/OR FOOTING HAVING 20 FT. OR MORE OF 1/2 IN. OR GREATER ELECTRICALLY CONDUCTIVE REINFORCING STEEL MUST HAVE IT BONDED TO THE GROUND RING USING AN EXOTHERMIC WELD CONNECTION USING #2 AWG SOLID BARE TINNED COPPER GROUND WIRE, PER NEC 250.50

GENERAL NOTES

1. FOR THE PURPOSE OF CONSTRUCTION DRAWING, THE FOLLOWING DEFINITIONS SHALL APPLY:

   CONTRACTOR – CENTERLINE COMMUNICATIONS
   SUBCONTRACTOR – GENERAL CONTRACTOR (CONSTRUCTION)
   OWNER – T-MOBILE

2. PRIOR TO THE SUBMISSION OF BIDS, THE BIDDING SUBCONTRACTOR SHALL VISIT THE CELL SITE TO FAMILIARIZE WITH THE EXISTING CONDITIONS AND TO CONFIRM THAT THE WORK CAN BE ACCOMPLISHED AS SHOWN ON THE CONSTRUCTION DRAWINGS. ANY DISCREPANCY FOUND SHALL BE BROUGHT TO THE ATTENTION OF CONTRACTOR.

3. ALL MATERIALS FURNISHED AND INSTALLED SHALL BE IN STRICT ACCORDANCE WITH ALL APPLICABLE CODES, REGULATIONS, AND ORDINANCES. SUBCONTRACTOR SHALL ISSUE ALL APPROPRIATE NOTICES AND COMPLY WITH ALL LAWS, ORDINANCES, RULES, REGULATIONS, AND LAWFUL ORDERS OF ANY PUBLIC AUTHORITY REGARDING THE PERFORMANCE OF THE WORK. ALL WORK CARRIED OUT SHALL COMPLY WITH ALL APPLICABLE MUNICIPAL AND UTILITY COMPANY SPECIFICATIONS AND LOCAL JURISDICTIONAL CODES, ORDINANCES AND APPLICABLE REGULATIONS.

4. DRAWINGS PROVIDED HERE ARE NOT TO BE SCALED AND ARE INTENDED TO SHOW OUTLINE ONLY.

5. UNLESS NOTED OTHERWISE, THE WORK SHALL INCLUDE FURNISHING MATERIALS, EQUIPMENT, APPURTENANCES, AND LABOR NECESSARY TO COMPLETE ALL INSTALLATIONS AS INDICATED ON THE DRAWINGS.

6. "KITTING LIST" SUPPLIED WITH THE BID PACKAGE IDENTIFIES ITEMS THAT WILL BE SUPPLIED BY CONTRACTOR. ITEMS NOT INCLUDED IN THE BILL OF MATERIALS AND KITTING LIST SHALL BE SUPPLIED BY THE SUBCONTRACTOR.

7. THE SUBCONTRACTOR SHALL INSTALL ALL EQUIPMENT AND MATERIALS IN ACCORDANCE WITH MANUFACTURER'S RECOMMENDATIONS UNLESS SPECIFICALLY STATED OTHERWISE.

8. IF THE SPECIFIED EQUIPMENT CANNOT BE INSTALLED AS SHOWN ON THESE DRAWINGS, THE SUBCONTRACTOR SHALL PROPOSE AN ALTERNATIVE INSTALLATION SPACE FOR APPROVAL BY THE CONTRACTOR.

9. SUBCONTRACTOR SHALL DETERMINE ACTUAL ROUTING OF CONDUIT, POWER AND T1 CABLES, GROUNDING CABLES AS SHOWN ON THE POWER, GROUNDING AND TELCO PLAN DRAWING. SUBCONTRACTOR SHALL UTILIZE EXISTING TRAYS AND/OR SHALL ADD NEW TRAYS AS NECESSARY. SUBCONTRACTOR SHALL CONFIRM THE ACTUAL ROUTING WITH THE CONTRACTOR.

10. THE SUBCONTRACTOR SHALL PROTECT EXISTING IMPROVEMENTS, PAVEMENTS, CURBS, LANDSCAPING AND STRUCTURES. ANY DAMAGED PART SHALL BE REPAIRED AT SUBCONTRACTOR'S EXPENSE TO THE SATISFACTION OF OWNER.

11. SUBCONTRACTOR SHALL LEGALLY AND PROPERLY DISPOSE OF ALL SCRAP MATERIALS SUCH AS COAXIAL CABLES AND OTHER ITEMS REMOVED FROM THE EXISTING FACILITY. ANTENNAS REMOVED SHALL BE RETURNED TO THE OWNER'S DESIGNATED LOCATION.

12. SUBCONTRACTOR SHALL LEAVE PREMISES IN CLEAN CONDITION.

13. ALL CONCRETE REPAIR WORK SHALL BE DONE IN ACCORDANCE WITH AMERICAN CONCRETE INSTITUTE (ACI) 301.

14. ANY NEW CONCRETE NEEDED FOR THE CONSTRUCTION SHALL BE AIR-ENTRAINED AND SHALL HAVE 4000 PSI STRENGTH AT 28 DAYS. ALL CONCRETE WORK SHALL BE DONE IN ACCORDANCE WITH ACI 318 CODE REQUIREMENTS.

15. ALL STRUCTURAL STEEL WORK SHALL BE DETAILED, FABRICATED AND ERECTED IN ACCORDANCE WITH AISC SPECIFICATIONS. ALL STRUCTURAL STEEL SHALL BE ASTM A36 (Fy = 36 ksi) UNLESS OTHERWISE NOTED. PIPES SHALL BE ASTM A53 TYPE E (Fy = 36 ksi). ALL STEEL EXPOSED TO WEATHER SHALL BE HOT DIPPED GALVANIZED. TOUCHUP ALL SCRATCHES AND OTHER MARKS IN THE FIELD AFTER STEEL IS ERECTED USING A COMPATIBLE ZINC RICH PAINT.

16. CONSTRUCTION SHALL COMPLY WITH SPECIFICATIONS AND "GENERAL CONSTRUCTION SERVICES FOR CONSTRUCTION OF T-MOBILE SITES."

17. SUBCONTRACTOR SHALL VERIFY ALL EXISTING DIMENSIONS AND CONDITIONS PRIOR TO COMMENCING ANY WORK. ALL DIMENSIONS OF EXISTING CONSTRUCTION SHOWN ON THE DRAWINGS MUST BE VERIFIED. SUBCONTRACTOR SHALL NOTIFY THE CONTRACTOR OF ANY DISCREPANCIES PRIOR TO ORDERING MATERIAL OR PROCEEDING WITH CONSTRUCTION.

18. THE EXISTING CELL SITE IS IN FULL COMMERCIAL OPERATION. ANY CONSTRUCTION WORK BY SUBCONTRACTOR SHALL NOT DISRUPT THE EXISTING NORMAL OPERATION. ANY WORK ON EXISTING EQUIPMENT MUST BE COORDINATED WITH CONTRACTOR. ALSO, WORK SHOULD BE SCHEDULED FOR AN APPROPRIATE MAINTENANCE WINDOW USUALLY IN LOW TRAFFIC PERIODS AFTER MIDNIGHT.

19. SINCE THE CELL SITE IS ACTIVE, ALL SAFETY PRECAUTIONS MUST BE TAKEN WHEN WORKING AROUND HIGH LEVELS OF ELECTROMAGNETIC RADIATION. EQUIPMENT SHOULD BE SHUTDOWN PRIOR TO PERFORMING ANY WORK THAT COULD EXPOSE THE WORKERS TO DANGER. PERSONAL RF EXPOSURE MONITORS ARE ADVISED TO BE WORN TO ALERT OF ANY DANGEROUS EXPOSURE LEVELS.

20. APPLICABLE BUILDING CODES:
    SUBCONTRACTOR'S WORK SHALL COMPLY WITH ALL APPLICABLE NATIONAL, STATE, AND LOCAL CODES AS ADOPTED BY THE LOCAL AUTHORITY HAVING JURISDICTION (AHJ) FOR THE LOCATION. THE EDITION OF THE AHJ ADOPTED CODES AND STANDARDS IN EFFECT ON THE DATE OF CONTRACT AWARD SHALL GOVERN THE DESIGN.
    BUILDING CODE: IBC 2015 WITH 780 CMR 9TH EDITION AMENDMENTS
    ELECTRICAL CODE: REFER TO ELECTRICAL DRAWINGS
    LIGHTENING CODE: REFER TO ELECTRICAL DRAWINGS

    SUBCONTRACTOR'S WORK SHALL COMPLY WITH THE LATEST EDITION OF THE FOLLOWING STANDARDS:

    AMERICAN CONCRETE INSTITUTE (ACI) 318; BUILDING CODE REQUIREMENTS FOR STRUCTURAL CONCRETE;

    AMERICAN INSTITUTE OF STEEL CONSTRUCTION (AISC)

    MANUAL OF STEEL CONSTRUCTION, ASD, FOURTEENTH EDITION;

    TELECOMMUNICATIONS INDUSTRY ASSOCIATION (TIA) 222-G, STRUCTURAL STANDARDS FOR STEEL

    EQUIPMENT AND ANTENNA SUPPORTING STRUCTURES; REFER TO ELECTRICAL DRAWINGS FOR SPECIFIC ELECTRICAL STANDARDS.

FOR ANY CONFLICTS BETWEEN SECTIONS OF LISTED CODES AND STANDARDS REGARDING MATERIAL, METHODS OF CONSTRUCTION, OR OTHER REQUIREMENTS, THE MOST RESTRICTIVE REQUIREMENT SHALL GOVERN. WHERE THERE IS CONFLICT BETWEEN A GENERAL REQUIREMENT AND A SPECIFIC REQUIREMENT, THE SPECIFIC REQUIREMENT SHALL GOVERN.

ABBREVIATIONS

AGL	ABOVE GRADE LEVEL	EQ	EQUAL	REQ	REQUIRED
AWG	AMERICAN WIRE GAUGE	GC	GENERAL CONTRACTOR	RF	RADIO FREQUENCY
BBU	BATTERY BACKUP UNIT	GRC	GALVANIZED RIGID CONDUIT	TBD	TO BE DETERMINED
BTCW	BARE TINNED SOLID COPPER WIRE	MGB	MASTER GROUND BAR	TBR	TO BE REMOVED
BGR	BURIED GROUND RING	MIN	MINIMUM	TBRR	TO BE REMOVED AND REPLACED
BTS	BASE TRANSCEIVER STATION	P	PROPOSED	TYP	TYPICAL
E	EXISTING	NTS	NOT TO SCALE	UG	UNDER GROUND
EGB	EQUIPMENT GROUND BAR	RAD	RADIATION CENTER LINE (ANTENNA)	VIF	VERIFY IN FIELD
EGR	EQUIPMENT GROUND RING	REF	REFERENCE		

T-MOBILE NORTHEAST LLC
15 COMMERCE WAY, SUITE B
NORTON, MA 02766
OFFICE: (508) 286-2700
FAX: (508) 286-2893

CENTERLINE COMMUNICATIONS
95 RYAN DRIVE #1
RAYNHAM, MA 02767

HDG HUDSON Design Group LLC
45 BEECHWOOD DRIVE
N. ANDOVER, MA 01845
TEL: (978) 557-5553
FAX: (978) 336-5586

COMMONWEALTH OF MASSACHUSETTS
DEREK J. CREASER
CIVIL
No. 49195
REGISTERED PROFESSIONAL ENGINEER

CHECKED BY: RP

APPROVED BY: DJC

SUBMITTALS

REV.	DATE	DESCRIPTION	BY
2	11/15/17	REVISED FOR CONSTRUCTION	VP
1	04/26/17	ISSUED FOR CONSTRUCTION	VP
0	03/08/17	ISSUED FOR PERMITTING	VP/HH

SITE NUMBER:
4WL0968A

SITE NAME:
LELAND HILL WATER TANK

SITE ADDRESS:
29 LELAND HILL ROAD
GRAFTON, MA 01757
WORCESTER COUNTY

SHEET TITLE
GENERAL NOTES

SHEET NUMBER
GN-1

SPECIAL WORK NOTE:
EXISTING UNDERGROUND UTILITY LOCATIONS ARE UNKNOWN. WHERE DIRECTED OR REQUIRED, HAND-EXCAVATE PROPOSED UTILITY TRENCHING

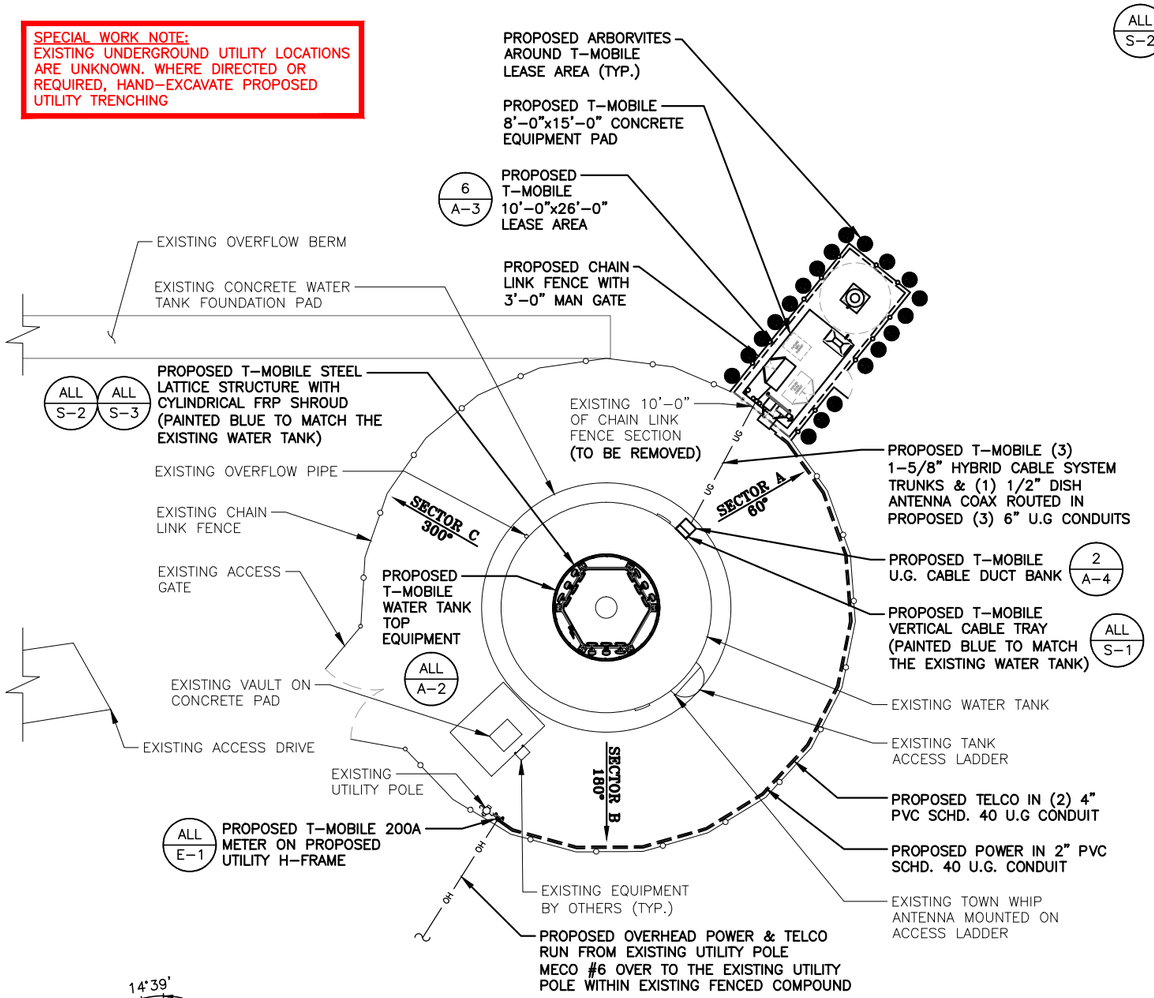

COMPOUND PLAN 1 A-1
22x34 SCALE: 3/32"=1'-0"
11x17 SCALE: 3/64"=1'-0"

0 5'-4" 10'-8" 21'-4" 32'-0"

STRUCTURAL NOTES:
PRIOR TO COMMENCING CONSTRUCTION, GC SHALL REFER TO STRUCTURAL ANALYSIS PROVIDED BY HDG, DATED: FEBRUARY 06, 2017 TO DETERMINE IF THERE ANY SUPPLEMENTAL OR SPECIAL INSTALLATION REQUIREMENTS, OR RELOCATION ARRANGEMENTS.

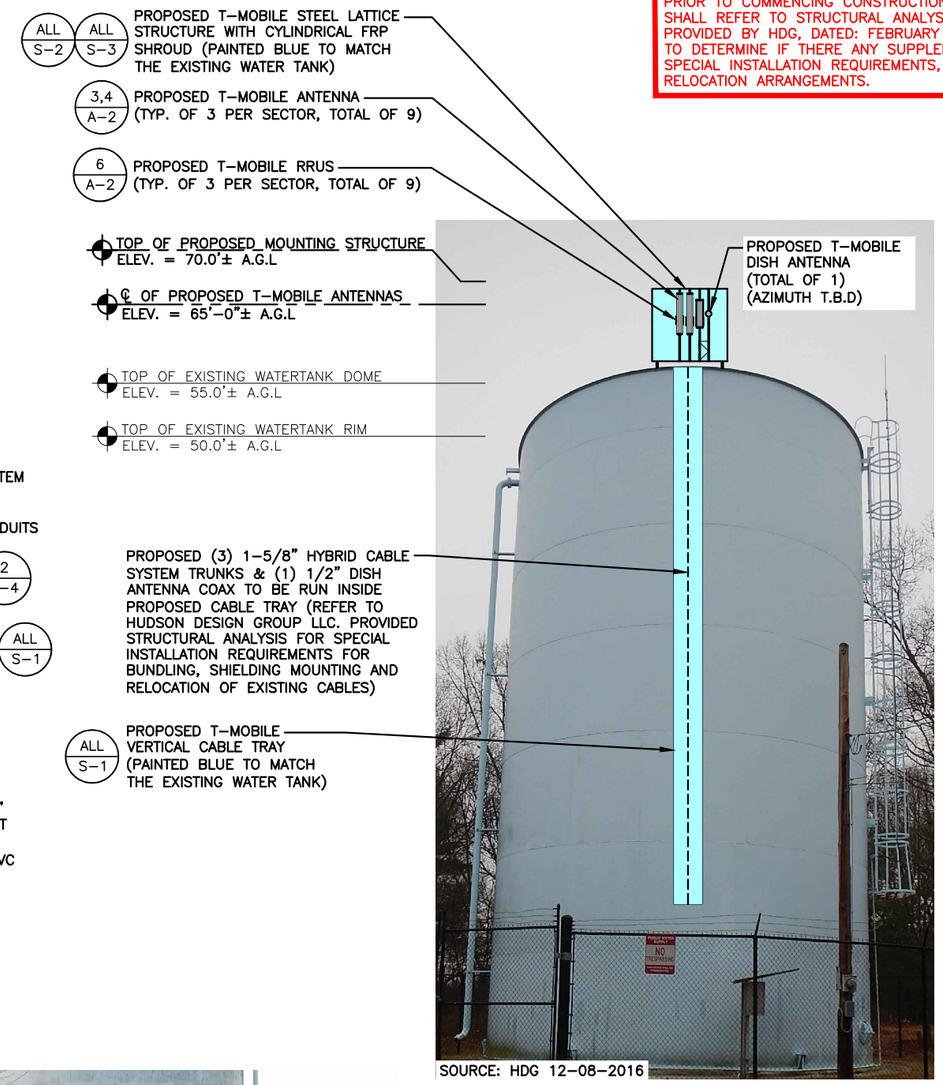

SOURCE: HDG 12-08-2016

TOWER ELEVATION PHOTO DETAIL 2 A-1
SCALE: N.T.S

SOURCE: HDG 12-08-2016

EQUIPMENT LOCATION PHOTO DETAIL 3 A-1
SCALE: N.T.S

T-MOBILE NORTHEAST LLC
15 COMMERCE WAY, SUITE B
NORTON, MA 02766
OFFICE: (508) 286-2700
FAX: (508) 286-2893

CENTERLINE COMMUNICATIONS
95 RYAN DRIVE #1
RAYNHAM, MA 02767

HDG HUDSON Design Group LLC
45 BEECHWOOD DRIVE
N. ANDOVER, MA 01845
TEL: (978) 557-5553
FAX: (978) 336-5586

COMMONWEALTH OF MASSACHUSETTS
DEREK J. CREASER
CIVIL
No. 49195
REGISTERED PROFESSIONAL ENGINEER

CHECKED BY: RP

APPROVED BY: DJC

SUBMITTALS

REV.	DATE	DESCRIPTION	BY
2	11/15/17	REVISED FOR CONSTRUCTION	VP
1	04/26/17	ISSUED FOR CONSTRUCTION	VP
0	03/08/17	ISSUED FOR PERMITTING	VP/HH

SITE NUMBER:
4WL0968A

SITE NAME:
LELAND HILL WATER TANK

SITE ADDRESS:
29 LELAND HILL ROAD
GRAFTON, MA 01757
WORCESTER COUNTY

SHEET TITLE
COMPOUND PLAN, EQUIPMENT PLAN & ELEVATION

SHEET NUMBER
A-1

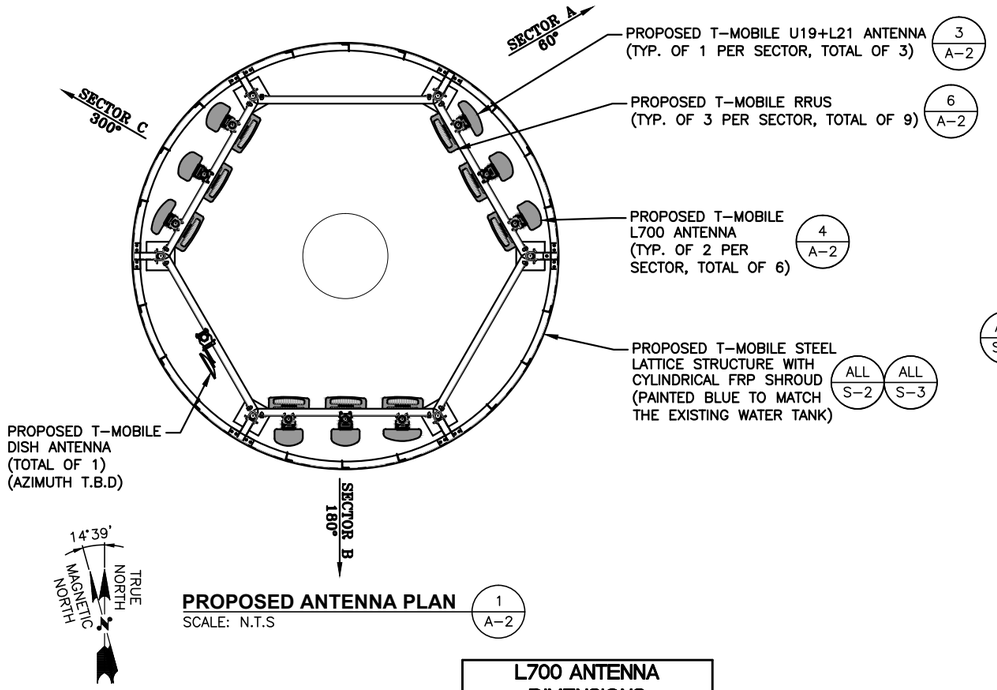

PROPOSED ANTENNA PLAN 1 A-2
SCALE: N.T.S

STRUCTURAL NOTES:
PRIOR TO COMMENCING CONSTRUCTION, GC SHALL REFER TO STRUCTURAL ANALYSIS PROVIDED BY HDG, DATED: FEBRUARY 06, 2017 TO DETERMINE IF THERE ANY SUPPLEMENTAL OR SPECIAL INSTALLATION REQUIREMENTS, OR RELOCATION ARRANGEMENTS.

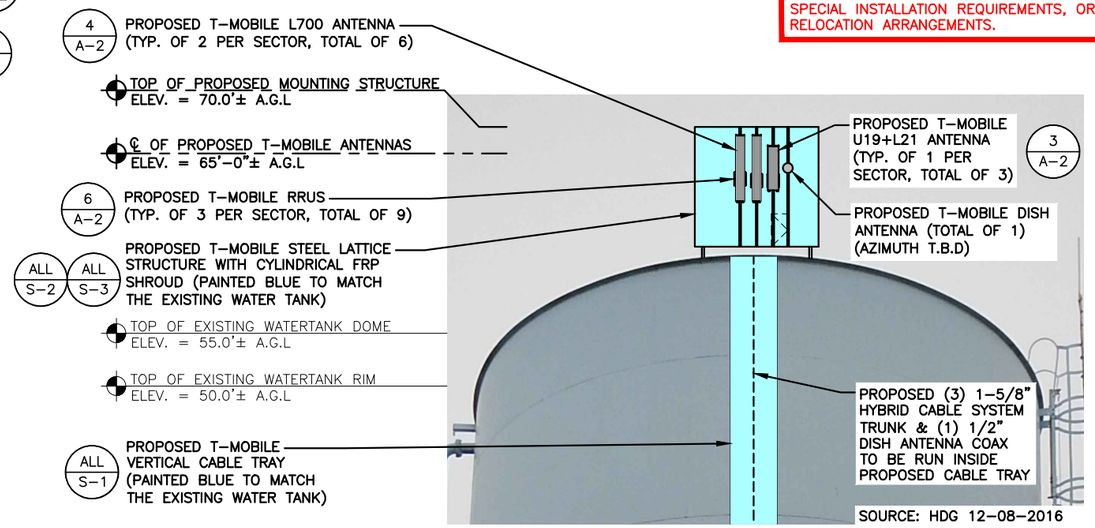

PROPOSED ANTENNA MOUNT PHOTO DETAIL 2 A-2
SCALE: N.T.S

U19+L21 ANTENNA DIMENSIONS	
MODEL #	CMA-BDHH/6521/E0-6/RMU/TB05
MANUF.	CELLMAX
WIDTH	14.7"
DEPTH	5.2"
HEIGHT	81.1"
WEIGHT	61.6 LBS

L700 ANTENNA DIMENSIONS	
MODEL #	LNX-6515DS-A1M
MANUF.	COMMSCOPE
WIDTH	11.9"
DEPTH	7.1"
HEIGHT	96.6"
WEIGHT	43.7 LBS

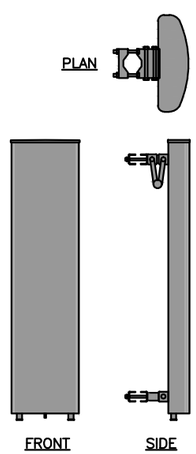

U19+L19 ANTENNA DETAIL 3 A-2
SCALE: N.T.S

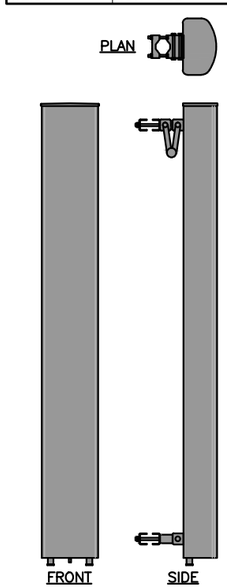

L700 ANTENNA DETAIL 4 A-2
SCALE: N.T.S

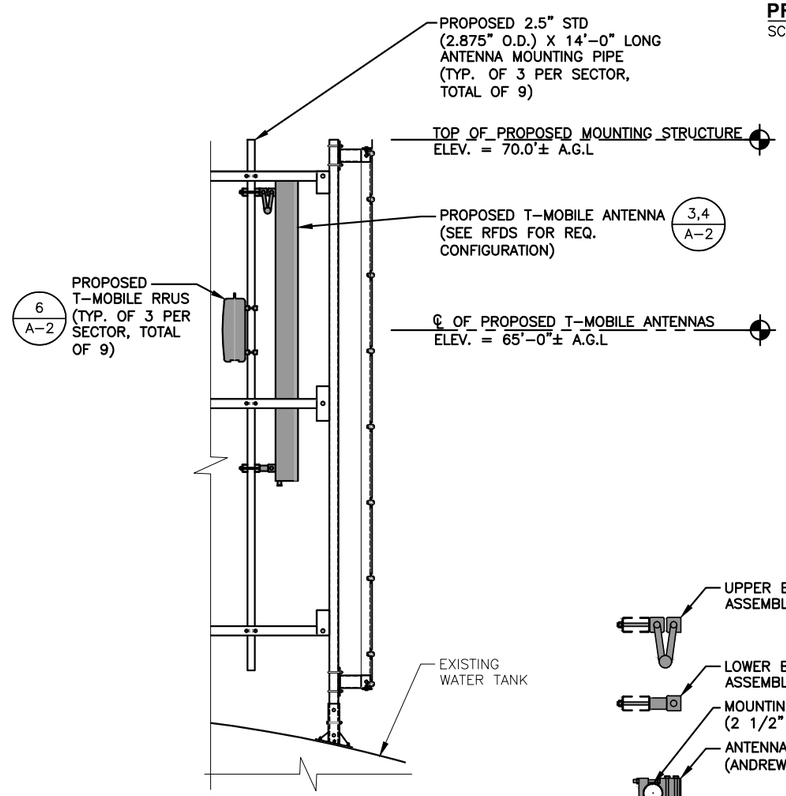

PROPOSED ANTENNA & RRU MOUNTING DETAIL 5 A-2
SCALE: N.T.S

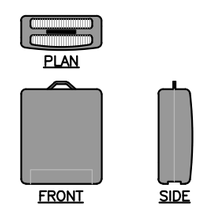

RRU DIMENSIONS	
MODEL #	RRUS11 B2
MODEL #	RRUS11 B4
MODEL #	RRUS11 B12
MANUF.	ERICSSON
WIDTH	17"
DEPTH	7"
HEIGHT	20"
WEIGHT	50.6 LBS

PROPOSED RRU DETAIL 6 A-2
SCALE: N.T.S

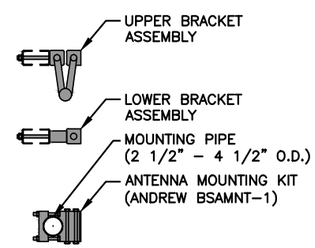

ANTENNA MOUNTING BRACKET 7 A-2
SCALE: N.T.S

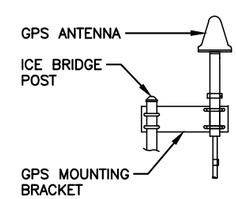

GPS DIMENSIONS	
MODEL #	CCAH32ST03
MANUF.	NAIS
HEIGHT	3.9"
WIDTH	3.5"

GPS ANTENNA MOUNTING DETAIL 8 A-2
SCALE: N.T.S

T-MOBILE NORTHEAST LLC
15 COMMERCE WAY, SUITE B
NORTON, MA 02766
OFFICE: (508) 286-2700
FAX: (508) 286-2893

CENTERLINE COMMUNICATIONS
95 RYAN DRIVE #1
RAYNHAM, MA 02767

HDG HUDSON Design Group LLC
45 BEECHWOOD DRIVE
N. ANDOVER, MA 01845
TEL: (978) 557-5553
FAX: (978) 336-5586

COMMONWEALTH OF MASSACHUSETTS
DEREK J. CREASER
CIVIL
No. 49195
REGISTERED PROFESSIONAL ENGINEER

CHECKED BY: RP

APPROVED BY: DJC

SUBMITTALS

REV.	DATE	DESCRIPTION	BY
2	11/15/17	REVISED FOR CONSTRUCTION	VP
1	04/26/17	ISSUED FOR CONSTRUCTION	VP
0	03/08/17	ISSUED FOR PERMITTING	VP/HH

SITE NUMBER:
4WL0968A

SITE NAME:
LELAND HILL WATER TANK

SITE ADDRESS:
29 LELAND HILL ROAD
GRAFTON, MA 01757
WORCESTER COUNTY

SHEET TITLE
TOWER EQUIPMENT DETAILS

SHEET NUMBER
A-2

CABINET DIMENSIONS	
MODEL #	RBS 6102
MANUF.	ERICSSON
WIDTH	51.2"
DEPTH	27.6"
HEIGHT	57.1"
WEIGHT (W/O BACKUP BATTERIES)	728 LBS
CABINET CAN BE MOUNTED DIRECTLY TO SITE GROUND (INSTALL PER MANUFACTURER'S INSTALLATION GUIDELINES)	

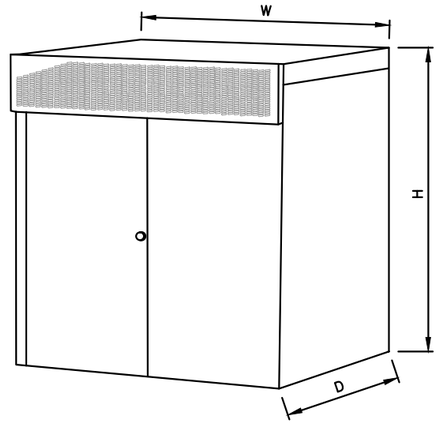

PROPOSED 6102 EQUIPMENT CABINET (1 / A-3)
SCALE: N.T.S

PPC DIMENSIONS	
MODEL #	CS2S2-W736
MANUF.	EMERSON
WIDTH	30"
DEPTH	10"
HEIGHT	66"
WEIGHT	150 LBS
NOTE: INSTALL CABINET ANCHORS PER MANUFACTURER'S INSTALLATION GUIDELINES	

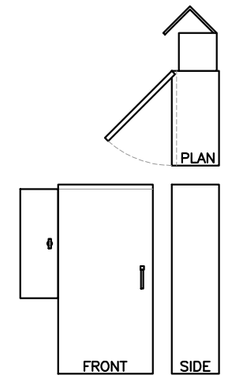

POWER PROTECTION CABINET (PPC) (2 / A-3)
SCALE: N.T.S

RAC DIMENSIONS	
MODEL #	RAC24
MANUF.	PURCELL
WIDTH	15"
DEPTH	18.5"
HEIGHT	24"
WEIGHT	35 LBS
NOTE: 1. INSTALL CABINET ANCHORS AND FLOOR MOUNT KIT ANCHORS PER MANUFACTURER'S INSTALLATION GUIDELINES	

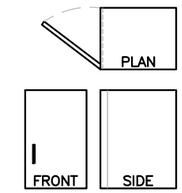

REMOTE ACCESS CABINET (RAC) (3 / A-3)
SCALE: N.T.S

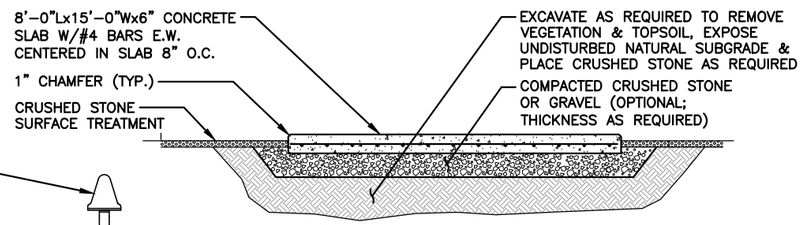

NEW CONC. PAD NOTES:
- REINF. W/ #4's @ 8" O.C. EA. WAY (MID-DEPTH).
- DOWEL NEW CONC. TO EXIST. W/ #4's @ 8" O.C. x 4" LONG. DRILL & EPOXY GROUT 4" INTO EXIST. CONC.
- REINF. SHALL BE ASTM A615-GRADE 60. SECURE IN PLACE.
- REINFORCEMENT IN EQUIPMENT SLAB TO BE WELDED AND BONDED TO GROUND RING

CONCRETE PAD DETAIL (4 / A-3)
SCALE: N.T.S

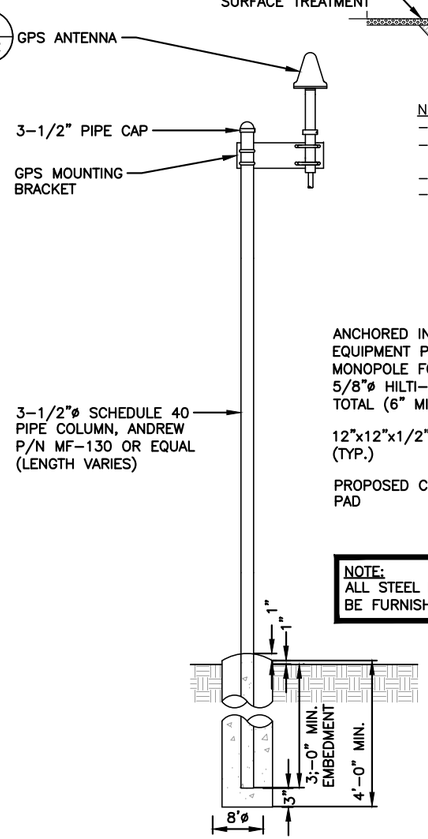

NOTE:
ALL STEEL IS GALVANIZED. ALL BOLTS TO BE FURNISHED W/ WASHERS AND NUTS.

POST DETAIL (5 / A-3)
SCALE: N.T.S

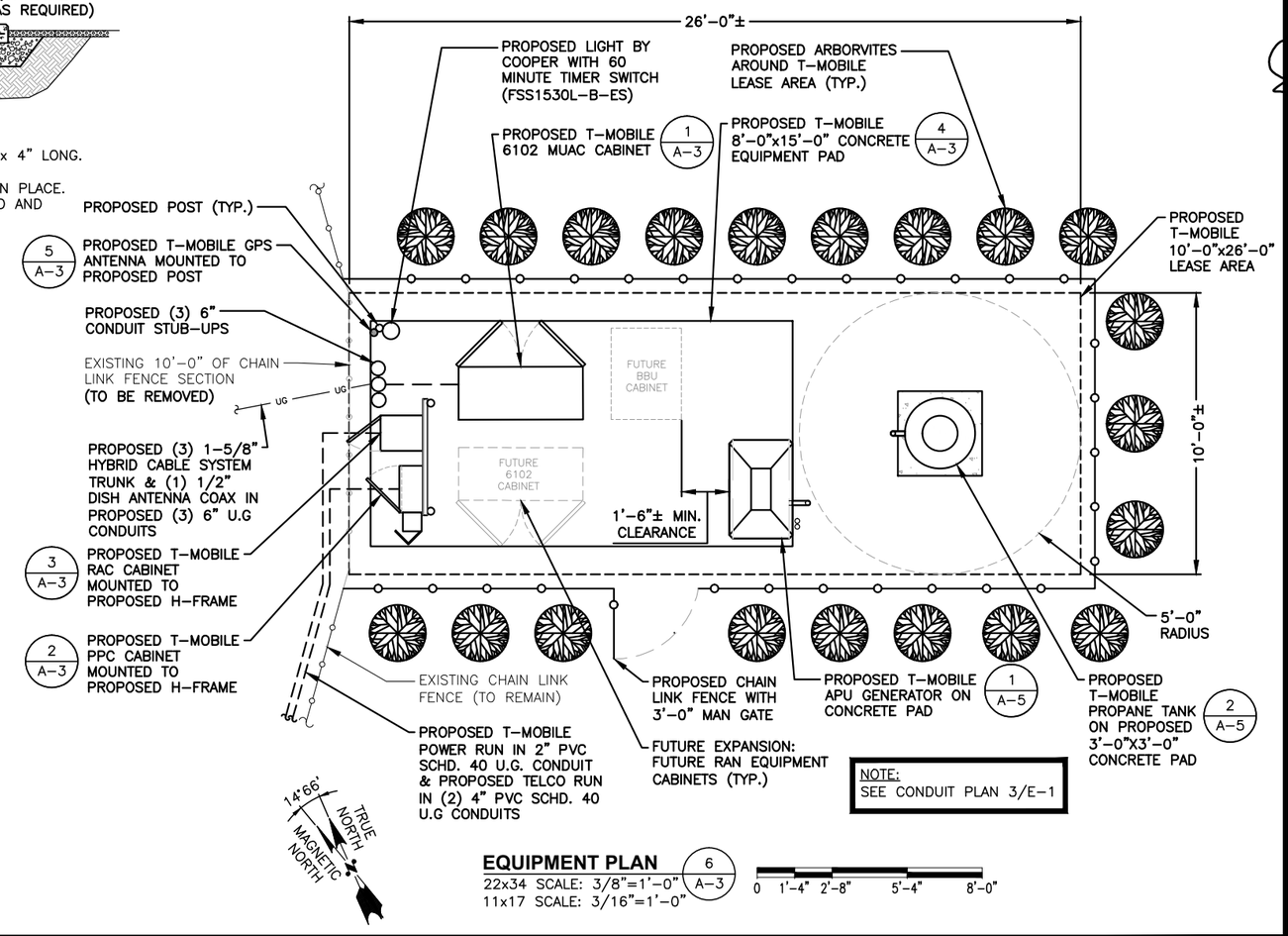

NOTE:
SEE CONDUIT PLAN 3/E-1

EQUIPMENT PLAN (6 / A-3)
22x34 SCALE: 3/8"=1'-0"
11x17 SCALE: 3/16"=1'-0"

0 1'-4" 2'-8" 5'-4" 8'-0"

T-MOBILE NORTHEAST LLC
15 COMMERCE WAY, SUITE B
NORTON, MA 02766
OFFICE: (508) 286-2700
FAX: (508) 286-2893

CENTERLINE COMMUNICATIONS
95 RYAN DRIVE #1
RAYNHAM, MA 02767

HUDSON Design Group LLC
45 BEECHWOOD DRIVE
N. ANDOVER, MA 01845
TEL: (978) 557-5553
FAX: (978) 336-5586

COMMONWEALTH OF MASSACHUSETTS
DEREK J. CREASER
CIVIL
No. 49195
REGISTERED PROFESSIONAL ENGINEER

CHECKED BY: RP

APPROVED BY: DJC

SUBMITTALS

REV.	DATE	DESCRIPTION	BY
2	11/15/17	REVISED FOR CONSTRUCTION	VP
1	04/26/17	ISSUED FOR CONSTRUCTION	VP
0	03/08/17	ISSUED FOR PERMITTING	VP/HH

SITE NUMBER:
4WL0968A

SITE NAME:
LELAND HILL WATER TANK

SITE ADDRESS:
29 LELAND HILL ROAD
GRAFTON, MA 01757
WORCESTER COUNTY

SHEET TITLE
GROUND EQUIPMENT DETAILS

SHEET NUMBER
A-3

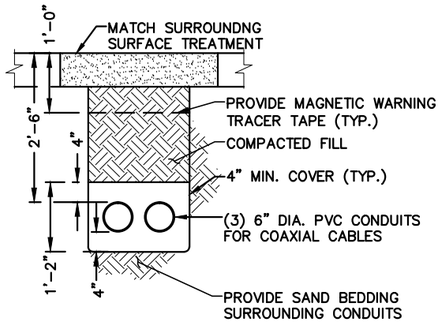

UNDERGROUND CONDUIT TRENCH DETAIL (1 / A-4)

SCALE: N.T.S

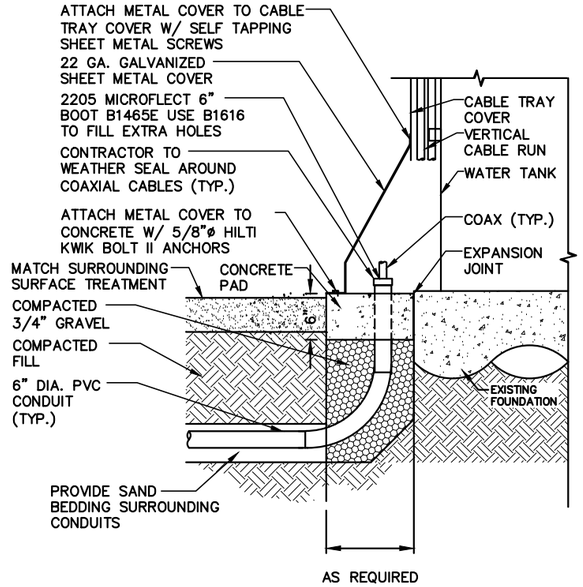

NOTES:
1. STUB UP SIMILAR AT CABINETS WITHOUT SHEET METAL COVER.

CONDUIT STUB UP DETAIL (2 / A-4)

SCALE: N.T.S

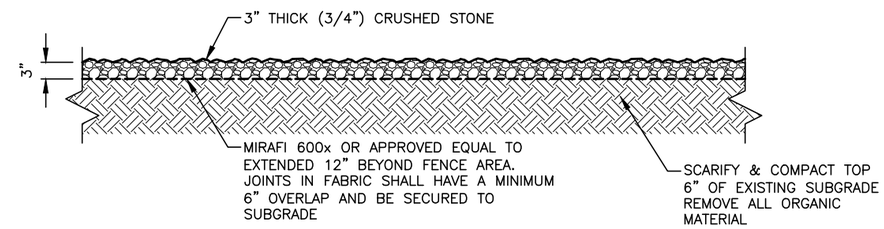

GRAVEL COMPOUND DETAIL (4 / A-4)

SCALE: N.T.S

FENCE NOTES

1. ALTERNATE FOOTINGS FOR ALL FENCE POSTS IN LEDGE: IF LEDGE IS ENCOUNTERED AT GRADE, OR AT A DEPTH SHALLOWER THAN 3'-6", CORE DRILL AN 8" DIA HOLE 18" INTO THE LEDGE. CENTER POST IN THE HOLE AND FILL WITH CONCRETE OR GROUT. IF LEDGE IS BELOW FINISH GRADE, COAT BACKFILLED SECTION OF POST WITH COAL TAR, AND BACKFILL WITH WELL-DRAINING GRAVEL.

2. ATTACH EACH GATE WITH 1-1/2 PAIR OF NON-LIFT-OFF TYPE, MALLEABLE IRON OR FORGING, PIN-TYPE HINGES. ASSEMBLIES SHALL ALLOW FOR 180° OF GATE TRAVEL.

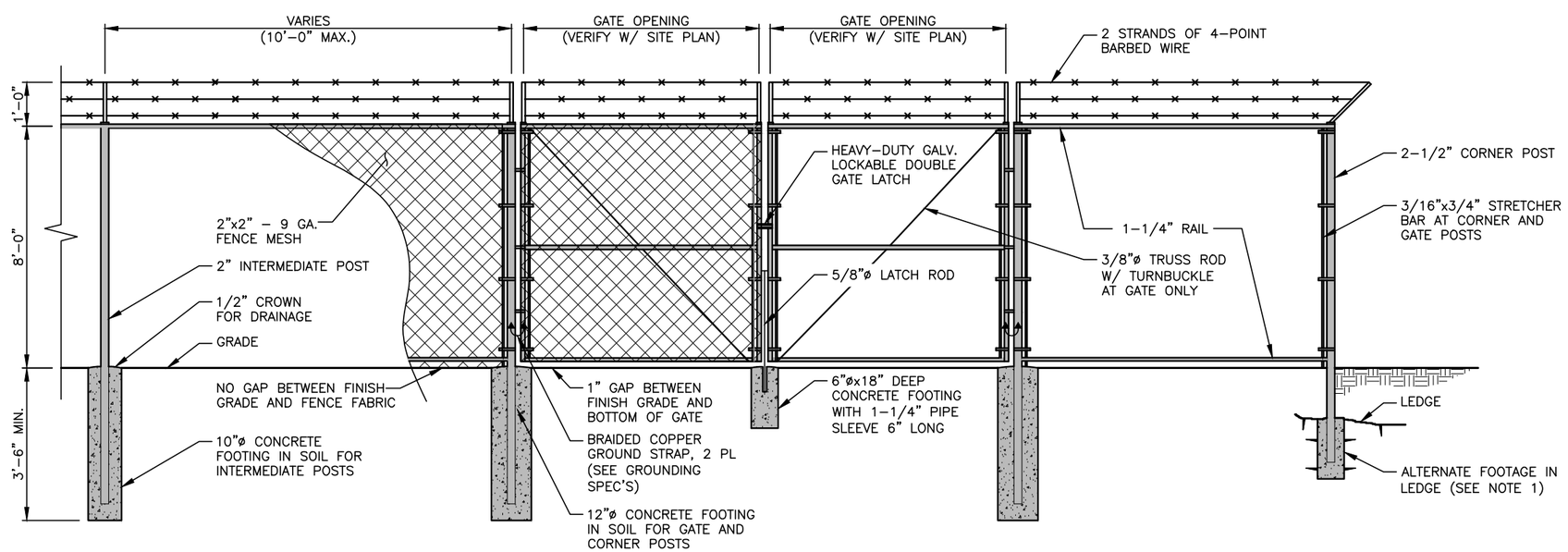

CHAINLINK FENCE DETAIL (3 / A-4)

SCALE: N.T.S

T-MOBILE NORTHEAST LLC
15 COMMERCE WAY, SUITE B
NORTON, MA 02766
OFFICE: (508) 286-2700
FAX: (508) 286-2893

CENTERLINE COMMUNICATIONS
95 RYAN DRIVE #1
RAYNHAM, MA 02767

HUDSON Design Group LLC
45 BEECHWOOD DRIVE
N. ANDOVER, MA 01845
TEL: (978) 557-5553
FAX: (978) 336-5586

COMMONWEALTH OF MASSACHUSETTS
DEREK J. CREASER
CIVIL
No. 49195
REGISTERED PROFESSIONAL ENGINEER

CHECKED BY: RP

APPROVED BY: DJC

SUBMITTALS

REV.	DATE	DESCRIPTION	BY
2	11/15/17	REVISED FOR CONSTRUCTION	VP
1	04/26/17	ISSUED FOR CONSTRUCTION	VP
0	03/08/17	ISSUED FOR PERMITTING	VP/HH

SITE NUMBER:
4WL0968A

SITE NAME:
LELAND HILL WATER TANK

SITE ADDRESS:
29 LELAND HILL ROAD
GRAFTON, MA 01757
WORCESTER COUNTY

SHEET TITLE
DETAILS

SHEET NUMBER
A-4

PLAN

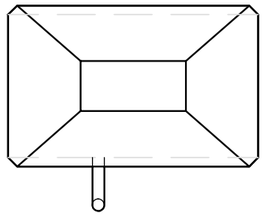

APU DIMENSIONS	
MODEL #	APU POWERGEN 7500
MANUF.	DELTA
HEIGHT	40"
WIDTH	42"
DEPTH	24"
NOTE: CLEARANCE REQUIREMENTS–APU: 5'–0" EXHAUST SIDE, 18" OTHERS	

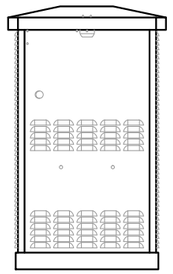

FRONT

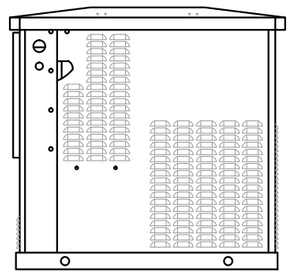

SIDE

APU GENERATOR DETAIL (1 / A–5)
SCALE: N.T.S

LP TANK DIMENSIONS	
HEIGHT	54"
DIAMETER	30"ø
WEIGHT	260 LBS.
NOTE: CLEARANCE REQUIREMENTS–LP TANK: 5'–0" SPARK RADIUS WHERE AN INTEGRAL MANUAL SHUT–OFF VALVE IS INSTALLED 80 HOURS RUNTIME–AVERAGE 5Kw LOAD	

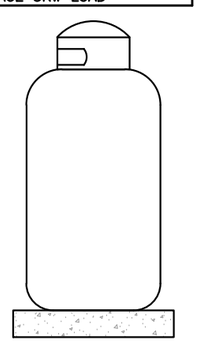

FRONT

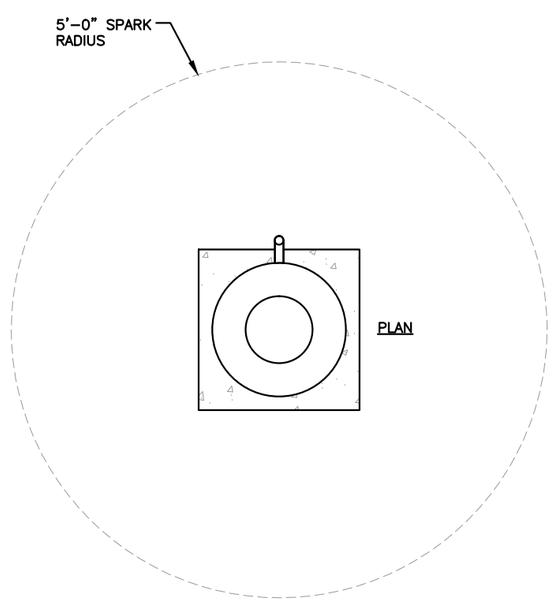

LP PROPANE TANK DETAIL (2 / A–5)
SCALE: N.T.S

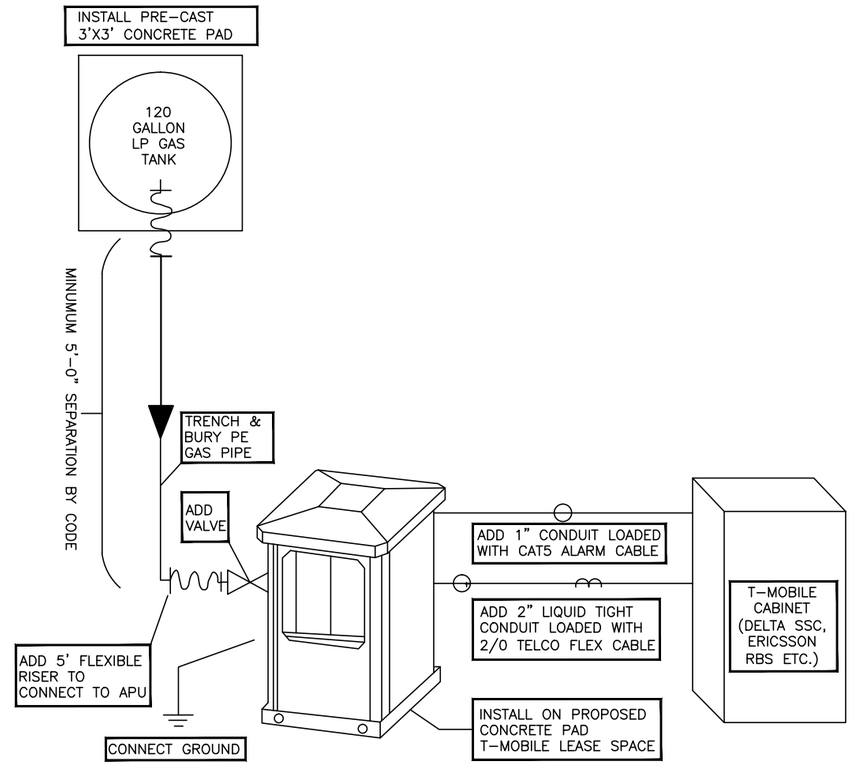

APU & LP TANK ONE-LINE DIAGRAM (3 / A–5)
SCALE: N.T.S

T-MOBILE NORTHEAST LLC
15 COMMERCE WAY, SUITE B
NORTON, MA 02766
OFFICE: (508) 286-2700
FAX: (508) 286-2893

CENTERLINE COMMUNICATIONS
95 RYAN DRIVE #1
RAYNHAM, MA 02767

HUDSON Design Group LLC
45 BEECHWOOD DRIVE
N. ANDOVER, MA 01845
TEL: (978) 557-5553
FAX: (978) 336-5586

COMMONWEALTH OF MASSACHUSETTS
DEREK J. CREASER
CIVIL
No. 49195
REGISTERED PROFESSIONAL ENGINEER

CHECKED BY: RP

APPROVED BY: DJC

SUBMITTALS

REV.	DATE	DESCRIPTION	BY
2	11/15/17	REVISED FOR CONSTRUCTION	VP
1	04/26/17	ISSUED FOR CONSTRUCTION	VP
0	03/08/17	ISSUED FOR PERMITTING	VP/HH

SITE NUMBER:
4WL0968A

SITE NAME:
LELAND HILL WATER TANK

SITE ADDRESS:
29 LELAND HILL ROAD
GRAFTON, MA 01757
WORCESTER COUNTY

SHEET TITLE
AUXILIARY POWER DETAILS

SHEET NUMBER
A-5

STRUCTURAL NOTES

1. DESIGN REQUIREMENTS ARE PER STATE BUILDING CODE AND APPLICABLE SUPPLEMENTS, INTERNATIONAL BUILDING CODE (IBC 2009), ASCE 7–05, EIA/TIA–222–G STRUCTURAL STANDARDS FOR STEEL ANTENNA, TOWERS AND ANTENNA SUPPORTING STRUCTURES.
2. CONTRACTOR SHALL VERIFY ALL DIMENSIONS AND CONDITIONS IN THE FIELD PRIOR TO FABRICATION AND ERECTION OF ANY MATERIAL. ANY UNUSUAL CONDITIONS SHALL BE REPORTED TO THE ATTENTION OF THE CONSTRUCTION MANAGER AND ENGINEER OF RECORD.
3. DESIGN AND CONSTRUCTION OF STRUCTURAL STEEL SHALL CONFORM TO THE AMERICAN INSTITUTE OF STEEL CONSTRUCTION "SPECIFICATION FOR THE DESIGN, FABRICATION AND ERECTION OF STRUCTURAL STEEL FOR BUILDINGS".
4. STRUCTURAL STEEL SHALL CONFORM TO ASTM A992 (Fy=50 ksi), MISCELLANEOUS STEEL SHALL CONFORM TO ASTM A36 UNLESS OTHERWISE INDICATED.
5. STEEL PIPE SHALL CONFORM TO ASTM A500 "COLD–FORMED WELDED & SEAMLESS CARBON STEEL STRUCTURAL TUBING", GRADE B, OR ASTM A53 PIPE STEEL BLACK AND HOT–DIPPED ZINC–COATED WELDED AND SEAMLESS TYPE E OR S, GRADE B. PIPE SIZES INDICATED ARE NOMINAL. ACTUAL OUTSIDE DIAMETER IS LARGER.
6. STRUCTURAL CONNECTION BOLTS SHALL BE HIGH STRENGTH BOLTS (BEARING TYPE) AND CONFORM TO ASTM A325 TYPE–X "HIGH STRENGTH BOLTS FOR STRUCTURAL JOINTS, INCLUDING SUITABLE NUTS AND PLAIN HARDENED WASHERS". ALL BOLTS SHALL BE 3/4" DIA UON.
7. ALL STEEL MATERIALS SHALL BE GALVANIZED AFTER FABRICATION IN ACCORDANCE WITH ASTM A123 "ZINC (HOT–DIP GALVANIZED) COATINGS ON IRON AND STEEL PRODUCTS", UNLESS OTHERWISE NOTED.
8. ALL BOLTS, ANCHORS AND MISCELLANEOUS HARDWARE SHALL BE GALVANIZED IN ACCORDANCE WITH ASTM A153 "ZINC–COATING (HOT–DIP) ON IRON AND STEEL HARDWARE", UNLESS OTHERWISE NOTED.
9. FIELD WELDS, DRILL HOLES, SAW CUTS AND ALL DAMAGED GALVANIZED SURFACES SHALL BE REPAIRED WITH AN ORGANIC ZINC REPAIR PAINT COMPLYING WITH REQUIREMENTS OF ASTM A780. GALVANIZING REPAIR PAINT SHALL HAVE 65 PERCENT ZINC BY WEIGHT, ZIRP BY DUNCAN GALVANIZING, GALVA BRIGHT PREMIUM BY CROWN OR EQUAL. THICKNESS OF APPLIED GALVANIZING REPAIR PAINT SHALL BE NOT NOT LESS THAN 4 COATS (ALLOW TIME TO DRY BETWEEN COATS) WITH A RESULTING COATING THICKNESS REQUIRED BY ASTM A123 OR A153 AS APPLICABLE.
10. CONTRACTOR SHALL COMPLY WITH AWS CODE FOR PROCEDURES, APPEARANCE AND QUALITY OF WELDS, AND FOR METHODS USED IN CORRECTING WELDING. ALL WELDERS AND WELDING PROCESSES SHALL BE QUALIFIED IN ACCORDANCE WITH AWS "STANDARD QUALIFICATION PROCEDURES". ALL WELDING SHALL BE DONE USING E70XX ELECTRODES AND WELDING SHALL CONFORM TO AISC AND DI.I. WHERE FILLET WELD SIZES ARE NOT SHOWN, PROVIDE THE MINIMUM SIZE PER TABLE J2.4 IN THE AISC "MANUAL OF STEEL CONSTRUCTION". 9TH EDITION.
11. INCORRECTLY FABRICATED, DAMAGED OR OTHERWISE MISFITTING OR NON–CONFORMING MATERIALS OR CONDITIONS SHALL BE REPORTED TO THE CONSTRUCTION MANAGER PRIOR TO REMEDIAL OR CORRECTIVE ACTION. ANY SUCH ACTION SHALL REQUIRE CONSTRUCTION MANAGER APPROVAL.
12. UNISTRUT SHALL BE FORMED STEEL CHANNEL STRUT FRAMING AS MANUFACTURED BY UNISTRUT CORP., WAYNE, MI OR EQUAL. STRUT MEMBERS SHALL BE 1 5/8"x1 5/8"x12GA, UNLESS OTHERWISE NOTED, AND SHALL BE HOT–DIP GALVANIZED AFTER FABRICATION.
13. EPOXY ANCHOR ASSEMBLY SHALL CONSIST OF STAINLESS STEEL ANCHOR ROD WITH NUTS & WASHERS. AN INTERNALLY THREADED INSERT, A SCREEN TUBE AND A EPOXY ADHESIVE. THE ANCHORING SYSTEM SHALL BE THE HILTI–HIT HY–20 AND OR HY–150 SYSTEMS (AS SPECIFIED IN DWG.) OR ENGINEERS APPROVED EQUAL.
14. EXPANSION BOLTS SHALL CONFORM TO FEDERAL SPECIFICATION FF–S–325, GROUP II, TYPE 4, CLASS I, HILTI KWIK BOLT III OR APPROVED EQUAL. INSTALLATION SHALL BE IN ACCORDANCE WITH THE MANUFACTURER'S RECOMMENDATIONS.
15. LUMBER SHALL COMPLY WITH THE REQUIREMENTS OF THE AMERICAN INSTITUTE OF TIMBER CONSTRUCTION AND THE NATIONAL FOREST PRODUCTS ASSOCIATION'S NATIONAL DESIGN SPECIFICATION FOR WOOD CONSTRUCTION. ALL LUMBER SHALL BE PRESSURE TREATED AND SHALL BE STRUCTURAL GRADE NO. 2 OR BETTER.
16. WHERE ROOF PENETRATIONS ARE REQUIRED, THE CONTRACTOR SHALL CONTACT AND COORDINATE RELATED WORK WITH THE BUILDING OWNER AND THE EXISTING ROOF INSTALLER. WORK SHALL BE PERFORMED IN SUCH A MANNER AS TO NOT VOID THE EXISTING ROOF WARRANTY. ROOF SHALL BE WATERTIGHT.
17. ALL FIBERGLASS MEMBERS USED ARE AS MANUFACTURED BY STRONGWELL COMPANY OF BRISTOL, VA 24203. ALL DESIGN CRITERIA FOR THESE MEMBERS IS BASED ON INFORMATION PROVIDED IN THE DESIGN MANUAL. ALL REQUIREMENTS PUBLISHED IN SAID MANUAL MUST BE STRICTLY ADHERED TO.
18. NO MATERIALS TO BE ORDERED AND NO WORK TO BE COMPLETED UNTIL SHOP DRAWINGS HAVE BEEN REVIEWED AND APPROVED IN WRITING.
19. SUBCONTRACTOR SHALL FIREPROOF ALL STEEL TO PRE–EXISTING CONDITIONS.

SPECIAL INSPECTION CHECKLIST

BEFORE CONSTRUCTION	
CONSTRUCTION/INSTALLATION INSPECTIONS AND TESTING REQUIRED (COMPLETED BY ENGINEER OF RECORD)	REPORT ITEM
REQUIRED	ENGINEER OF RECORD APPROVED SHOP DRAWINGS[1]
REQUIRED	MATERIAL SPECIFICATIONS REPORT[2]
N/A	FABRICATOR NDE INSPECTION
N/A	NDE REPORT OF MONOPOLE BASE PLATE (AS REQUIRED)
REQUIRED	PACKING SLIPS[3]
ADDITIONAL TESTING AND INSPECTIONS:	
DURING CONSTRUCTION	
CONSTRUCTION/INSTALLATION INSPECTIONS AND TESTING REQUIRED (COMPLETED BY ENGINEER OF RECORD)	REPORT ITEM
REQUIRED	STEEL INSPECTIONS
REQUIRED	HIGH STRENGTH BOLT INSPECTIONS
N/A	HIGH WIND ZONE INSPECTIONS
N/A	FOUNDATION INSPECTIONS
N/A	CONCRETE COMP. STRENGTH, SLUMP TESTS AND PLACEMENT
N/A	POST INSTALLED ANCHOR ROD VERIFICATION
N/A	BASE PLATE GROUT VERIFICATION
REQUIRED	CERTIFIED WELD INSPECTION
N/A	EARTHWORK: LIFT AND DENSITY
N/A	ON SITE COLD GALVANIZING VERIFICATION
N/A	GUY WIRE TENSION REPORT
ADDITIONAL TESTING AND INSPECTIONS:	
AFTER CONSTRUCTION	
CONSTRUCTION/INSTALLATION INSPECTIONS AND TESTING REQUIRED (COMPLETED BY ENGINEER OF RECORD)	REPORT ITEM
REQUIRED	MODIFICATION INSPECTOR REDLINE OR RECORD DRAWINGS[5]
N/A	POST INSTALLED ANCHOR ROD PULL–OUT TESTING
REQUIRED	PHOTOGRAPHS
ADDITIONAL TESTING AND INSPECTIONS:	

NOTES

1. REQUIRED FOR ANY NEW SHOP FABRICATED FRP OR STEEL.
2. PROVIDED BY MANUFACTURER, REQUIRED IF HIGH STRENGTH BOLTS OR STEEL.
3. PROVIDED BY GENERAL CONTRACTOR; PROOF OF MATERIALS.
4. HIGH WIND ZONE INSPECTION CATB 120MPH OR CAT C,D 110MPH INSPECT FRAMING OF WALLS, ANCHORING, FASTENING SCHEDULE.
5. AS REQUIRED; FOR ANY FIELD CHANGES TO THE ITEMS IN THIS TABLE.

NOTES

1. ALL CONNECTIONS TO BE SHOP WELDED & FIELD BOLTED USING 3/4"ø A325–X BOLTS, UNLESS OTHERWISE NOTIFIED.
2. SHOP DRAWING ENGINEER REVIEW & APPROVAL REQUIRED BEFORE ORDERING MATERIAL.
3. SHOP DRAWING ENGINEER REVIEW & APPROVAL REQUIRED PRIOR TO STEEL FABRICATION.
4. VERIFICATION OF EXISTING ROOF CONSTRUCTION IS REQUIRED PRIOR TO THE INSTALLATION OF THE ROOF PLATFORM.ENGINEER OF RECORD IS TO APPROVE EXISTING CONDITIONS IN ORDER TO MOVE FORWARD.
5. CENTERLINE OF PROPOSED STEEL PLATFORM SUPPORT COLUMNS TO BE CENTRALLY LOCATED OVER THE EXISTING BUILDING COLUMNS.
6. EXISTING BRICK MASONRY COLUMNS/BEARING TO BE REPAIRED/REPLACED AT ALL PROPOSED PLATFORM SUPPORT POINT. ENGINEER OF RECORD TO APPROVE.

SPECIAL INSPECTIONS (REFERENCE IBC CHAPTER 17)

GENERAL: WHERE APPLICATION IS MADE FOR CONSTRUCTION, THE OWNER OR THE REGISTERED DESIGN PROFESSIONAL IN RESPONSIBLE CHARGE ACTING AS THE OWNER'S AGENT SHALL EMPLOY ONE OR MORE APPROVED AGENCIES TO PERFORM INSPECTIONS DURING CONSTRUCTION ON THE TYPES OF WORK LISTED IN THE INSPECTION CHECKLIST ABOVE.

THE REGISTERED DESIGN PROFESSIONAL IN RESPONSIBLE CHARGE AND ENGINEERS OF RECORD INVOLVED IN THE DESIGN OF THE PROJECT ARE PERMITTED TO ACT AS THE APPROVED AGENCY AND THEIR PERSONNEL ARE PERMITTED TO ACT AS THE SPECIAL INSPECTOR FOR THE WORK DESIGNED BY THEM, PROVIDED THOSE PERSONNEL MEET THE QUALIFICATION REQUIREMENTS.

STATEMENT OF SPECIAL INSPECTIONS: THE APPLICANT SHALL SUBMIT A STATEMENT OF SPECIAL INSPECTIONS PREPARED BY THE REGISTERED DESIGN PROFESSIONAL IN RESPONSIBLE CHARGE IN ACCORDANCE WITH SECTION 107.1 AS A CONDITION FOR ISSUANCE. THIS STATEMENT SHALL BE IN ACCORDANCE WITH SECTION 1705.

REPORT REQUIREMENT: SPECIAL INSPECTORS SHALL KEEP RECORDS OF INSPECTIONS. THE SPECIAL INSPECTOR SHALL FURNISH INSPECTION REPORTS TO THE BUILDING OFFICIAL, AND TO THE REGISTERED DESIGN PROFESSIONAL IN RESPONSIBLE CHARGE. REPORTS SHALL INDICATE THAT WORK INSPECTED WAS OR WAS NOT COMPLETED IN CONFORMANCE TO APPROVED CONSTRUCTION DOCUMENTS. DISCREPANCIES SHALL BE BROUGHT TO THE IMMEDIATE ATTENTION OF THE CONTRACTOR FOR CORRECTION. IF THEY ARE NOT CORRECTED, THE DISCREPANCIES SHALL BE BROUGHT TO THE ATTENTION OF THE BUILDING OFFICIAL AND TO THE REGISTERED DESIGN PROFESSIONAL IN RESPONSIBLE CHARGE. A FINAL REPORT DOCUMENTING REQUIRED SPECIAL INSPECTIONS SHALL BE SUBMITTED.

REQUIRED INSPECTIONS AND SITE REVIEW DOCUMENT AS A CONDITION OF THE BUILDING PERMIT THE FOLLOWING INSPECTIONS AND SITE REVIEWS IDENTIFIED BY THE BUILDING OFFICIAL ARE REQUIRED FOR WORK PER THE 8TH EDITION OF THE MASSACHUSETTS STATE BUILDING CODE, 780 CMR, SECTION 110 AND CHAPTER 17

REQUIRED SITE REVIEW AND DOCUMENTATION FOR PORTIONS OR PHASES CONSTRUCTION [1,6,7]
(TO BE PERFORMED BY THE APPROPRIATE REGISTERED DESIGN PROFESSIONAL OR HIS/HER DESIGNEE OR M.G.L.C 112 §81R CONTRACTOR)

SITE REVIEW AND DOCUMENTATION	X	SITE REVIEW AND DOCUMENTATION	X
SOIL CONDITION/ANALYSIS/REPORT		ENERGY EFFICIENCY REQUIREMENTS	
FOOTING AND FOUNDATION (INCLUDING REINFORCEMENT AND FOUNDATION ATTACHMENT)		FIRE ALARM INSTALLATION[2]	
CONCRETE FLOOR AND UNDER FLOOR		FIRE SUPPRESSION INSTALLATION[3]	
LOWEST FLOOR FLOOD ELEVATION		FIELD REPORTS[5]	
STRUCTURAL FRAME – WALL/FLOOR/ROOF	X	CARBON MONOXIDE DETECTION SYSTEM[4]	
LATH AND PLASTER/GYPSUM		SEISMIC REINFORCEMENT	
FIRE RESISTANT WALL/PARTITIONS FRAMING		SMOKE CONTROL SYSTEMS	
FIRE RESISTANT WALL/PARTITIONS FINISH ATTACHMENTS		SMOKE AND HEAT VENTS	
ABOVE CEILING INSPECTION		ACCESSIBILITY (521 CMR)	
FIRE BLOCKING/STOPPING SYSTEM		OTHER:	
EMERGENCY LIGHTING/EXIT SIGNAGE			
MEANS OF EGRESS COMPONENTS		SPECIAL INSPECTIONS (SECTION 1704):	X
ROOFING, COPING/SYSTEM			
VENTING SYSTEMS (KITCHEN, CHEMICAL, FUME)			
MECHANICAL SYSTEMS			

1. IT IS THE RESPONSIBILITY OF THE PERMIT APPLICANT TO NOTIFY THE BUILDING OFFICIAL OF REQUIRED INSPECTIONS (X). INSPECTION OF 780 CMR FIRE PROTECTION SYSTEMS MAY BE WITNESSED BY THE FIRE OFFICIAL AND INSTALLATION PERMITS ARE REQUIRED FROM THE FIRE DEPARTMENT PER 527 CMR.
2. INCLUDE NFPA 72 TEST AND ACCEPTANCE DOCUMENTATION
3. INCLUDE APPLICABLE NFPA 13, 13R, 13D, 14, 15, 17, 20, 241, ETC. – TEST AND ACCEPTANCE DOCUMENTATION
4. INCLUDE NFPA 720 RECORD OF COMPLETION AND INSPECTION AND TEST FORM
5. INCLUDE FIELD REPORTS AND RELATED DOCUMENTATION
6. WORK SHALL NOT PROCEED, OR BE CONCEALED, UNTIL THE REQUIRED INSPECTION HAS BEEN APPROVED BY THE BUILDING OFFICIAL, AND NOTHING WITHIN CONSTRUCTION CONTROL SHALL HAVE THE EFFECT OF WAIVING OR LIMITING THE BUILDING OFFICIAL'S AUTHORITY TO ENFORCE THIS CODE WITH RESPECT TO EXAMINATION OF THE CONTRACT DOCUMENTS, INCLUDING PLANS, COMPUTATIONS AND SPECIFICATIONS, AND FIELD INSPECTIONS.
7. ROUGH AND/OR FINISH INSPECTIONS OF ELECTRICAL, PLUMBING, OR SHEET METAL SHALL BE INSPECTED PRIOR TO ROUGH AND FINISH INSPECTIONS BY THE BUILDING OFFICIAL.

MASSACHUSETTS AMENDMENTS TO THE IBC (REFERENCE 780 CMR)

107.6 CONSTRUCTION CONTROL.
107.6.1 GENERAL. THIS SECTION SHALL APPLY TO THE CONSTRUCTION CONTROLS, PROFESSIONAL SERVICES AND CONTRACTOR SERVICES REQUIRED FOR BUILDINGS AND STRUCTURES NEEDING REGISTERED DESIGN PROFESSIONAL SERVICES. THE FOLLOWING STRUCTURES ARE EXEMPT FROM THE REQUIREMENTS OF THIS SECTION: ANY BUILDING CONTAINING LESS THAN 35,000 CUBIC FEET OF ENCLOSED SPACE, MEASURED TO THE EXTERIOR SURFACES OF WALLS AND ROOFS AND TO THE TOP OF A GROUND SUPPORTED FLOOR, OR IN THE CASE OF A CRAWL SPACE, TO THE BOTTOM SURFACE OF THE CRAWL SPACE. IN THE CASE OF BASEMENT FLOORS OR LEVELS, THE CALCULATION OF ENCLOSED SPACE SHALL INCLUDE SUCH SPACES. FOR ADDITIONS TO EXISTING BUILDINGS, THE VOLUME OF ENCLOSED SPACE SHALL INCLUDE THE ENTIRE EXISTING BUILDING AND ALL PROPOSED ADDITIONS.

1. ANY ONE OR TWO FAMILY DWELLING OR ANY ACCESSORY BUILDING THERETO.
2. ANY BUILDING USED EXCLUSIVELY FOR AGRICULTURAL PURPOSES. SEE APPENDIX C FOR OCCUPANCY AND OTHER LIMITATIONS.
3. RETAINING WALLS LESS THAN TEN FEET IN HEIGHT AT ALL POINTS ALONG THE WALL AS MEASURED FROM THE BASE OF THE FOOTING TO THE TOP OF THE WALL.

NOTWITHSTANDING THESE EXEMPTIONS, PROFESSIONAL ENGINEERING SERVICES SHALL BE REQUIRED FOR ACTIVITIES WHICH ARE DEEMED TO CONSTITUTE THE PRACTICE OF ENGINEERING AS DEFINED IN M.G.L. C. 112, § 81D, EXCEPT AS PROVIDED IN M.G.L. C. 54A AND ANY LEGALLY REQUIRED PROFESSION OR AS PROVIDED IN M.G.L. C. 112, § 81R. WHERE WORK IS PERFORMED BY LICENSED TRADES PEOPLE PURSUANT TO M.G.L. C. 112, § 81R, PLANS AND SPECIFICATIONS PREPARED TO DOCUMENT THAT WORK SHALL NOT BE REQUIRED TO BEAR THE SEAL OR SIGNATURE OF A REGISTERED DESIGN PROFESSIONAL.

107.6.1.1 SPECIALIZED STRUCTURES. TELECOMMUNICATION TOWERS, WIND TURBINE TOWERS, AND SIMILAR STRUCTURES ARE ENGINEERED STRUCTURES AND SHALL BE SUBJECT TO THE REQUIREMENTS OF SECTION 107.6.

107.6.2.2 CONSTRUCTION. THE REGISTERED DESIGN PROFESSIONALS WHO ARE RESPONSIBLE FOR THE DESIGN, PLANS, CALCULATIONS, AND SPECIFICATIONS, THEIR DESIGNEE OR THE REGISTERED DESIGN PROFESSIONALS WHO HAVE BEEN RETAINED FOR CONSTRUCTION PHASE SERVICES, SHALL PERFORM THE FOLLOWING TASKS:

1. REVIEW, FOR CONFORMANCE TO THIS CODE AND THE DESIGN CONCEPT, SHOP DRAWINGS, SAMPLES AND OTHER SUBMITTALS BY THE CONTRACTOR IN ACCORDANCE WITH THE REQUIREMENTS OF THE CONSTRUCTION DOCUMENTS.
2. PERFORM THE DUTIES FOR REGISTERED DESIGN PROFESSIONALS IN CHAPTER 17.
3. BE PRESENT AT INTERVALS APPROPRIATE TO THE STAGE OF CONSTRUCTION TO BECOME GENERALLY FAMILIAR WITH THE PROGRESS AND QUALITY OF THE WORK AND TO DETERMINE IF THE WORK IS BEING PERFORMED IN A MANNER CONSISTENT WITH THE CONSTRUCTION DOCUMENTS AND THIS CODE.

THE PERMIT APPLICATION SHALL NOT BE DEEMED COMPLETED UNTIL ALL OF THE CONSTRUCTION DOCUMENTS REQUIRED BY THIS CODE HAVE BEEN SUBMITTED. DOCUMENTATION INDICATING THAT WORK COMPLIES WITH THE PLANS AND SPECIFICATIONS SHALL BE PROVIDED AT THE COMPLETION OF EACH PHASE WHEN REQUIRED BY THE BUILDING OFFICIAL.

107.6.3 CONSTRUCTION CONTRACTOR SERVICES. THE ACTUAL CONSTRUCTION OF THE WORK SHALL BE THE RESPONSIBILITY OF THE GENERAL CONTRACTOR AS IDENTIFIED ON THE APPROVED BUILDING PERMIT AND SHALL INVOLVE THE FOLLOWING:

1. EXECUTION OF ALL WORK IN ACCORDANCE WITH THE APPROVED CONSTRUCTION DOCUMENTS.
2. EXECUTION AND CONTROL OF ALL METHODS OF CONSTRUCTION IN A SAFE AND SATISFACTORY MANNER IN ACCORDANCE WITH ALL APPLICABLE LOCAL, STATE, AND FEDERAL STATUTES AND REGULATIONS.
3. UPON COMPLETION OF THE CONSTRUCTION, CERTIFICATION IN WRITING TO THE REGISTERED DESIGN PROFESSIONAL IN RESPONSIBLE CHARGE THAT, TO THE BEST OF THE CONTRACTOR'S KNOWLEDGE AND BELIEF, CONSTRUCTION HAS BEEN DONE IN SUBSTANTIAL ACCORD WITH SECTION 107.6 AND WITH ALL PERTINENT DEVIATIONS SPECIFICALLY NOTED. THE BUILDING OFFICIAL MAY REQUIRE A COPY OF THIS CERTIFICATION.

107.6.4 ON SITE PROJECT REPRESENTATION. WHEN APPLICATIONS FOR UNUSUAL DESIGNS OR MAGNITUDE OF CONSTRUCTION ARE FILED, OR WHERE REFERENCE STANDARDS REQUIRE SPECIAL ARCHITECTURAL OR ENGINEERING INSPECTIONS, THE BUILDING OFFICIAL MAY REQUIRE FULLTIME PROJECT REPRESENTATION BY A REGISTERED ARCHITECT OR PROFESSIONAL ENGINEER IN ADDITION TO THAT PROVIDED IN SECTION 107.6. THE PROJECT REPRESENTATIVE SHALL KEEP DAILY RECORDS AND SUBMIT REPORTS AS MAY BE REQUIRED BY THE BUILDING OFFICIAL. UPON COMPLETION OF THE WORK, THE REGISTERED DESIGN PROFESSIONAL SHALL FILE A FINAL REPORT INDICATING THAT THE WORK HAS BEEN PERFORMED IN ACCORDANCE WITH THE APPROVED PLANS AND THIS CODE. THIS ON SITE PROJECT REPRESENTATION REQUIREMENT SHALL BE DETERMINED PRIOR TO THE ISSUANCE OF THE BUILDING PERMIT AND SHALL BE A REQUISITE FOR THE PERMIT ISSUANCE. REFUSAL BY THE APPLICANT TO PROVIDE SUCH SERVICE SHALL RESULT IN THE DENIAL OF THE PERMIT. ALL FEES AND COSTS RELATED TO THE PERFORMANCE OF ONSITE PROJECT REPRESENTATION SHALL BE BORNE BY THE OWNER.

T-MOBILE NORTHEAST LLC
15 COMMERCE WAY, SUITE B
NORTON, MA 02766
OFFICE: (508) 286-2700
FAX: (508) 286-2893

CENTERLINE COMMUNICATIONS
95 RYAN DRIVE #1
RAYNHAM, MA 02767

HUDSON Design Group LLC
45 BEECHWOOD DRIVE
N. ANDOVER, MA 01845
TEL: (978) 557-5553
FAX: (978) 336-5586

COMMONWEALTH OF MASSACHUSETTS
DEREK J. CREASER
CIVIL
No. 49195
REGISTERED PROFESSIONAL ENGINEER

CHECKED BY: RP

APPROVED BY: DJC

SUBMITTALS

REV.	DATE	DESCRIPTION	BY
2	11/15/17	REVISED FOR CONSTRUCTION	VP
1	04/26/17	ISSUED FOR CONSTRUCTION	VP
0	03/08/17	ISSUED FOR PERMITTING	VP/HH

SITE NUMBER:
4WL0968A
SITE NAME:
LELAND HILL WATER TANK
SITE ADDRESS:
29 LELAND HILL ROAD
GRAFTON, MA 01757
WORCESTER COUNTY

SHEET TITLE
SPECIAL INSPECTIONS NOTES

SHEET NUMBER
SN-1

GENERAL:

1. WELDING STUDS SHALL BE FLANGED THREADED STAINLESS STEEL CONFORMING TO ASTM A-276 OR A-493 SPECIFICATIONS. ALL STUDS SHALL BE 3/8" DIAMETER BY 1-3/4" LONG, UNLESS OTHERWISE NOTED ON THE CONSTRUCTION DRAWINGS.
2. STUDS MUST BE WELDED BY THE CAPACITOR DISCHARGE METHOD, NELSON NCD 100 SYSTEM, AS MANUFACTURED AND MARKETED BY NELSON STUD WELDING, ELYRIA OHIO, (800) 635-9353 OR (440) 329-0400, OR APPROVED EQUAL. FILLET WELDS ARE NOT ACCEPTABLE.
3. CONTRACTOR SHALL RECEIVE IN WRITING THE OWNERS REQUIREMENTS FOR TANK INSPECTIONS PRIOR TO COMMENCING WITH THE WORK ON THE TANK. UPON THE COMPLETION OF CONSTRUCTION, THE CONTRACTOR IS RESPONSIBLE FOR OBTAINING A WRITTEN RELEASE FROM THE OWNER STATING THAT ALL WORK WAS PERFORMED IN ACCORDANCE WITH THE CONSTRUCTION DOCUMENTS AND THE OWNERS WRITTEN REQUIREMENTS AND RELEASES ALL LIABILITY TO THE CONTRACTOR, THE ENGINEER, THE APPLICANT, AND THE STUD MANUFACTURER.
4. CONTRACTOR SHALL COMPLY WITH AWS D1.1 AND AWS C5.4 FOR PROCEDURES, APPEARANCE AND QUALITY OF WELDS, AND FOR METHODS USED IN CORRECTING WELDING. ALL WELDERS AND WELDING PROCESSES SHALL BE QUALIFIED IN ACCORDANCE WITH AWS "STANDARD QUALIFICATION PROCEDURES". CONTRACTOR SHALL ADHERE TO AWS RECOMMENDED "SAFE PRACTICES FOR WELDING".
5. WELDING PARAMETERS, MACHINE POWER AND DWELL TIME SHALL BE QUALIFIED FOR THE WELDING POSITION, MATERIAL THICKNESS AND STUD SIZE TO BE USED. IF CHANGES IN THE SET-UP OCCUR AS DEFINED IN AWS D1.1, THE PROCEDURE MUST BE REQUALIFIED. CONTRACTOR SHALL SUBMIT CERTIFICATION OF WELDERS FOR STUD WELDING TO THE ENGINEER PRIOR TO COMMENCEMENT OF THE WORK.

SURFACE PREPARATION

1. CLEANING PROCEDURES SHALL BE VERIFIED AS MEETING THE MINIMUM REQUIREMENTS PER THE AWS WELDING HANDBOOK, VOLUME 2, "QUALITY CONTROL AND INSPECTION" FOR STUD WELDING, IF THE EXISTING COATING SYSTEM CONTAINS LEAD OR OTHER POTENTIALLY HAZARDOUS MATERIALS, SPECIAL PROCEDURES FOR REMOVAL AND DISPOSAL WILL BE REQUIRED.
2. PREPARE SURFACE TO BE WELDED BY SPOT REMOVING PAINT TO BARE METAL USING POWER BRUSHING IN ACCORDANCE WITH SSPC-SP11, (STEEL STRUCTURES PAINTING COUNCIL, SSPC-VIS 1-671). USE A 3M STRIP-N-CLEAN FLEXIBLE WHEEL OR APPROVED EQUAL. A WIRE WHEEL IS NOT ACCEPTABLE.
3. FOLLOW POWER TOOL CLEANING WITH A NON-FLAMMABLE SOLVENT CLEANING TO REMOVE ANY OILS, CONTAMINANTS, RUST OR DIRT PRIOR TO STUD WELDING. (SSPC-SP1 BY STEEL STRUCTURES PAINTING COUNCIL, SSPC-VIS 1-67T)

STUD QUALIFICATION TESTING AND SAMPLING

1. THE QUALIFICATION OF STUD APPLICATION AND PRE-PRODUCTION TESTING SHALL BE IN ACCORDANCE WITH THE REQUIREMENTS OF CHAPTER 7 "STUD WELDING" OF AWS D1.1 INITIAL QUALIFICATION TESTING SHALL BE PERFORMED UNDER INSPECTION BY THE ENGINEER.
2. STUD APPLICATION SHALL BE QUALIFIED BY STUD WELDING TEN (10) SPECIMENS CONSECUTIVELY TO ASTM A-36 STEEL BASE MATERIALS USING RECOMMENDED PROCEDURES AND SETTINGS FOR EACH DIAMETER, POSITION, AND SURFACE GEOMETRY. THE TEN SPECIMENS SHALL BE TORQUE TESTED TO FAILURE. STUD APPLICATION SHALL BE CONSIDERED QUALIFICATION IF ALL TEST SPECIMENS ARE TORQUED TO DESTRUCTION WITHOUT FAILURE IN THE WELD. IN ADDITION, PRIOR TO PRODUCTION, CONTRACTOR SHALL PREPARE SIX (6) STUD WELDED SAMPLES USING A-36 STEEL PLATES AT THICKNESS EQUAL TO EACH OF THE PLATE THICKNESS OF THE WATER TANK TO BE WELDED TO. THE SIDE OPPOSITE THE STUD WELD SHALL HAVE A SIMILAR COATING (MINIMUM DFT-6MIL) TO THE EXISTING INTERIOR COATING OF THE WATER TANK. SAMPLES SHALL BE SUBMITTED TO THE ENGINEER FOR APPROVAL.
3. BEFORE PRODUCTION, AT THE START OF EVERY SHIFT AND FOR EACH PARTICULAR SETUP, TESTING SHALL BE PERFORMED ON THE FIRST TWO STUDS THAT ARE WELDED. IN PLACE OF THE ACTUAL PRODUCTION STUD, TESTING MAY BE PERFORMED ON A MATERIAL SIMILAR TO THE PRODUCTION MEMBER IN THICKNESS AND PROPERTIES. TESTING SHALL INCLUDE A VISUAL EXAMINATION OF THE STUD WELD FOR A FULL 360 DEGREE FLASH. IN ADDITION, THE TEST SHALL INCLUDE TORQUE TESTING THE STUDS IN ACCORDANCE WITH THE FOLLOWING CRITERIA.

STUD DIAMETER (IN.)	TESTING TORQUE (FT. LB)	FASTENING TORQUE (FT. LB)
3/8 - 20 UNC	21.5	6.0

4. IF FAILURE OCCURS, THE PROCEDURE SHALL BE CORRECTED AND TWO MORE STUDS SHALL BE WELDED AND TESTED.
5. PRIOR TO PRODUCTION, CONTRACTOR SHALL PERFORM THREE (3) TEST WELDS ON THE WATER TANK IN A LOCATION SPECIFIED BY THE TANK OWNER TO VERIFY THAT NO DAMAGE WILL OCCUR TO THE COATING SYSTEM ON THE INTERIOR OF THE TANK. ANY AND ALL DAMAGE TO THE INTERIOR COATING SHALL BE REPAIRED TO THE OWNER'S SATISFACTION. IF DAMAGE DOES OCCUR, THE PROCEDURE SHALL BE REEVALUATED BY THE ENGINEER, CONSTRUCTION AUTHORIZED REPRESENTATIVE, AND OWNER BEFORE COMMENCING WITH THE WORK.

REPAINTING

1. ALL PAINTING SURFACES AFFECTED BY WELDING OPERATIONS SHALL BE REPAINTED TO MATCH ADJACENT EXISTING SURFACES. PAINTING SHALL INCLUDE COATING OF THE STUDS.
2. PRIOR TO REPAINTING, SURFACES SHALL BE SOLVENT CLEANED TO REMOVE ANY OILS, CONTAMINANTS, RUST OR DIRT PRIOR TO REPAINTING (SSPC-SP1 BY STEEL STRUCTURES PAINTING COUNCIL, SSPC-VIS 1-67T)
3. PAINT USED TO REPAIR INTERIOR COATING SHALL MATCH THE EXISTING COATING SYSTEM OF THE TANK OR SHALL BE A SIMILAR SYSTEM COMPATIBLE WITH THE EXISTING SYSTEM AND ACCEPTABLE TO THE OWNER. VERIFY EXISTING COATING SYSTEM WITH THE TANK OWNER.
4. EXTERIOR STEEL SHALL BE PAINTED WITH 1 COAT EPOXY PRIMER (DFT-5-7 IL) AND 2 COATS POLYURETHANE FINISH (DFT-4-5 MIL) WITH COLOR TO MATCH EXISTING SURFACE. PAINT SHALL BE AS MANUFACTURED BY SHERWIN WILLIAMS, CLEVELAND, OHIO 1-800-321-8194 OR EQUAL COATING TO MATCH EXISTING. CONTRACTOR SHALL VERIFY OWNER'S PAINT REQUIREMENTS PRIOR TO COMMENCEMENT OF THE WORK.
5. CONTRACTOR TO VERIFY COATING SYSTEMS ARE COMPATIBLE WITH THE EXISTING SYSTEMS BY ADHESION TESTING PER ASTM D3359 "MEASURING ADHESION BY TAPE TEST".
6. CONTRACTOR TO VERIFY THAT CANS OF THE PRODUCT ARE NOT BEYOND MANUFACTURER RECOMMENDED SHELF LIFE. ASSURE THROUGH MIXING OF PREMEASURED TWO COMPONENT COATING SYSTEMS.
7. SURFACE CLEANING SHALL BE FOLLOWED WITH PRIMER COAT ON THE SAME DAY.
8. PAINT MUST BE APPLIED AT SURFACE AND AMBIENT TEMPERATURES BETWEEN 50 DEGREES TO 120 DEGREES FAHRENHEIT. NO PAINTING SHALL BE DONE ABOVE 80% RELATIVE HUMIDITY. THE AMBIENT TEMPERATURE BEFORE THE START OF COATING APPLICATION MUST AT BE LEAST 5 DEGREES FAHRENHEIT ABOVE THE DEW POINT AS DETERMINED BY CONVENTIONAL ACCEPTED STANDARDS.
9. PAINT SHALL BE APPLIED USING A NATURAL BRISTLE BRUSH FOR A SMOOTH BRUSH FINISH.
10. PAINT SHALL BE FEATHERED OUT AT TIE-IN AREAS OF EXISTING COATING. PAINT SHALL BE WORKED IN AND AROUND IRREGULARITIES IN THE SURFACE.

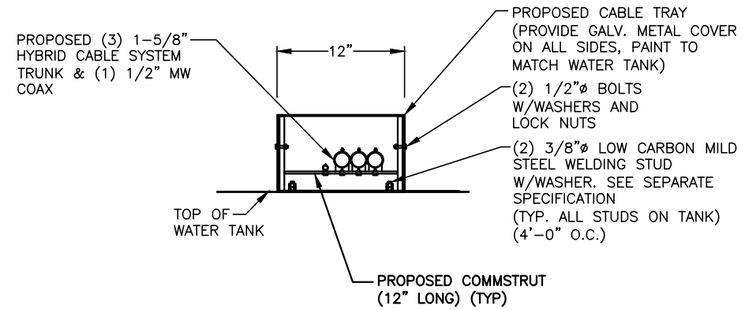

HORIZONTAL CABLE TRAY SECTION (1 / S-1)
SCALE: N.T.S

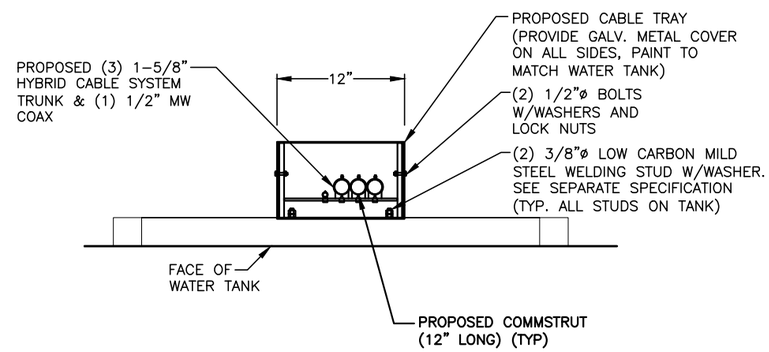

VERTICAL CABLE TRAY SECTION (2 / S-1)
SCALE: N.T.S

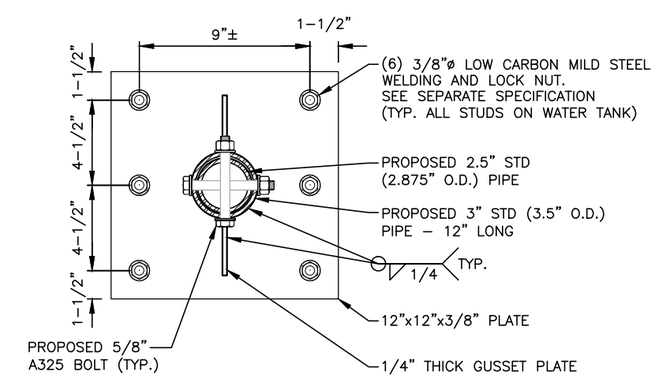

BASE PLATE (3 / S-1)
22x34 SCALE: 3"=1'-0"
11x17 SCALE: 1-1/2"=1'-0"

0 0'-2" 0'-4" 0'-8" 1'-0"

T-MOBILE NORTHEAST LLC
15 COMMERCE WAY, SUITE B
NORTON, MA 02766
OFFICE: (508) 286-2700
FAX: (508) 286-2893

CENTERLINE COMMUNICATIONS
95 RYAN DRIVE #1
RAYNHAM, MA 02767

HUDSON Design Group LLC
45 BEECHWOOD DRIVE
N. ANDOVER, MA 01845
TEL: (978) 557-5553
FAX: (978) 336-5586

COMMONWEALTH OF MASSACHUSETTS
DEREK J. CREASER
CIVIL
No. 49195
REGISTERED PROFESSIONAL ENGINEER

CHECKED BY: RP

APPROVED BY: DJC

SUBMITTALS

REV.	DATE	DESCRIPTION	BY
2	11/15/17	REVISED FOR CONSTRUCTION	VP
1	04/26/17	ISSUED FOR CONSTRUCTION	VP
0	03/08/17	ISSUED FOR PERMITTING	VP/HH

SITE NUMBER:
4WL0968A

SITE NAME:
LELAND HILL WATER TANK

SITE ADDRESS:
29 LELAND HILL ROAD
GRAFTON, MA 01757
WORCESTER COUNTY

SHEET TITLE
CABLE TRAY DETAILS

SHEET NUMBER
S-1

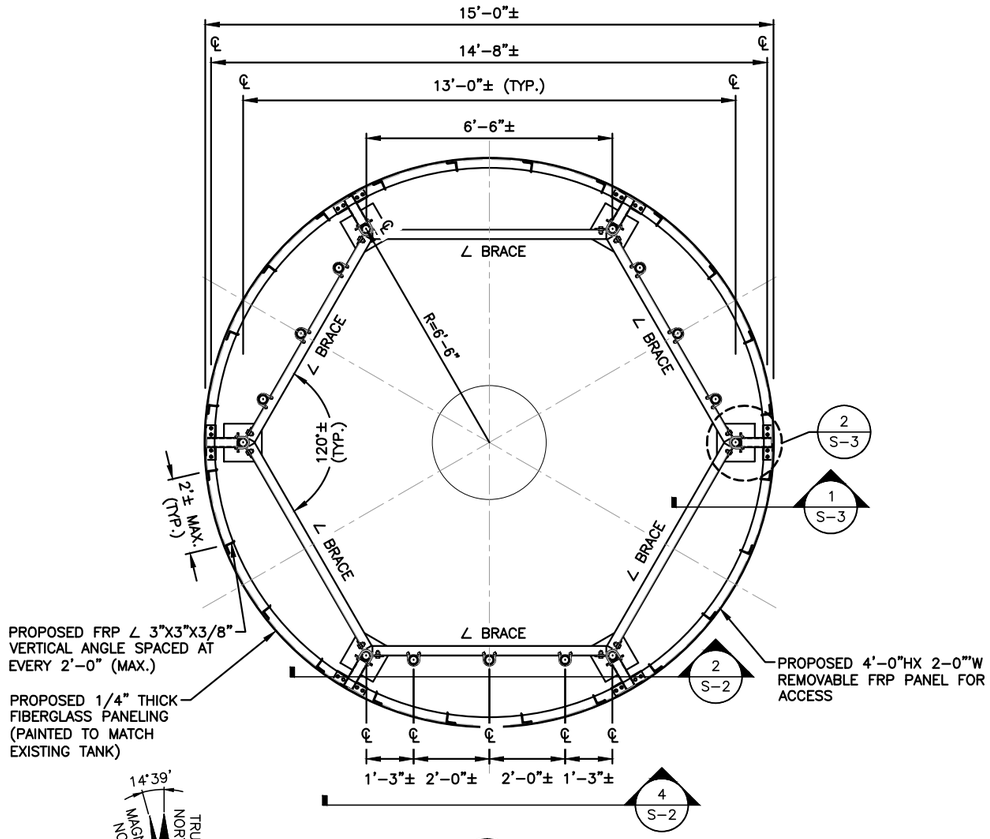

STRUCTURAL PLAN (1 / S-2)

22x34 SCALE: 1/2"=1'-0"
11x17 SCALE: 1/4"=1'-0"

0 1'-0" 2'-0" 4'-0" 6'-0"

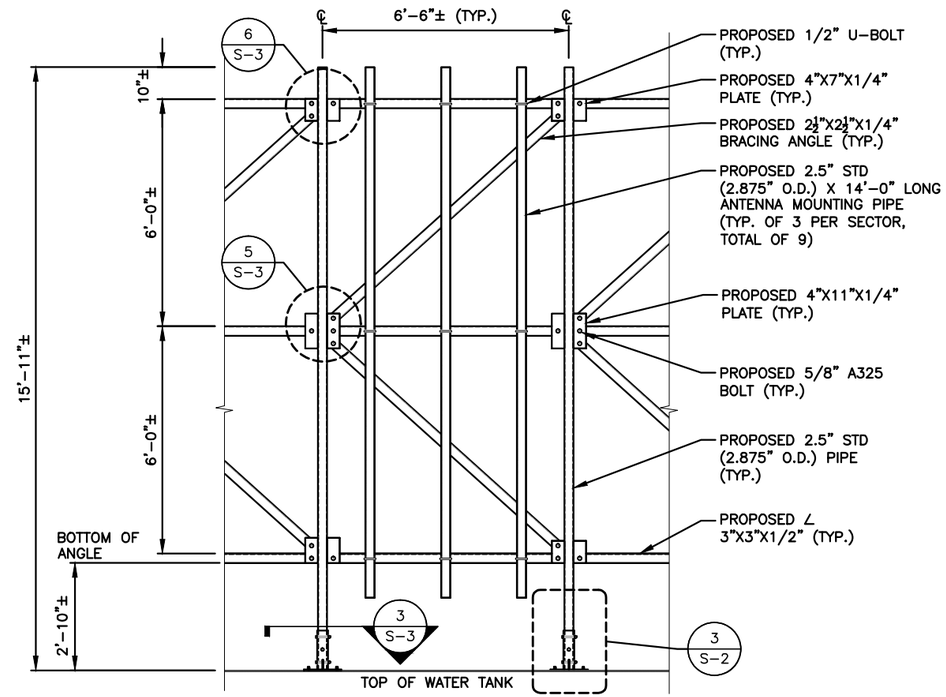

PARTIAL FRP ENCLOSURE ELEVATION (2 / S-2)

22x34 SCALE: 1/2"=1'-0"
11x17 SCALE: 1/4"=1'-0"

0 1'-0" 2'-0" 4'-0" 6'-0"

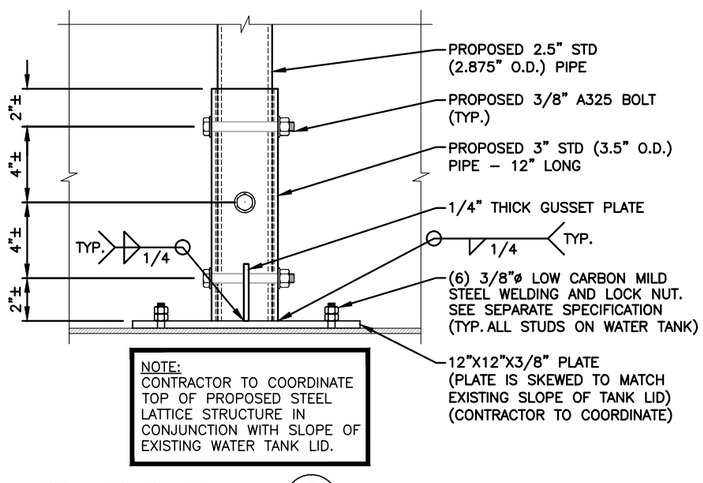

NOTE:
CONTRACTOR TO COORDINATE TOP OF PROPOSED STEEL LATTICE STRUCTURE IN CONJUNCTION WITH SLOPE OF EXISTING WATER TANK LID.

CONNECTION DETAIL (3 / S-2)

22x34 SCALE: 3"=1'-0"
11x17 SCALE: 1-1/2"=1'-0"

0 0'-2" 0'-4" 0'-8" 1'-0"

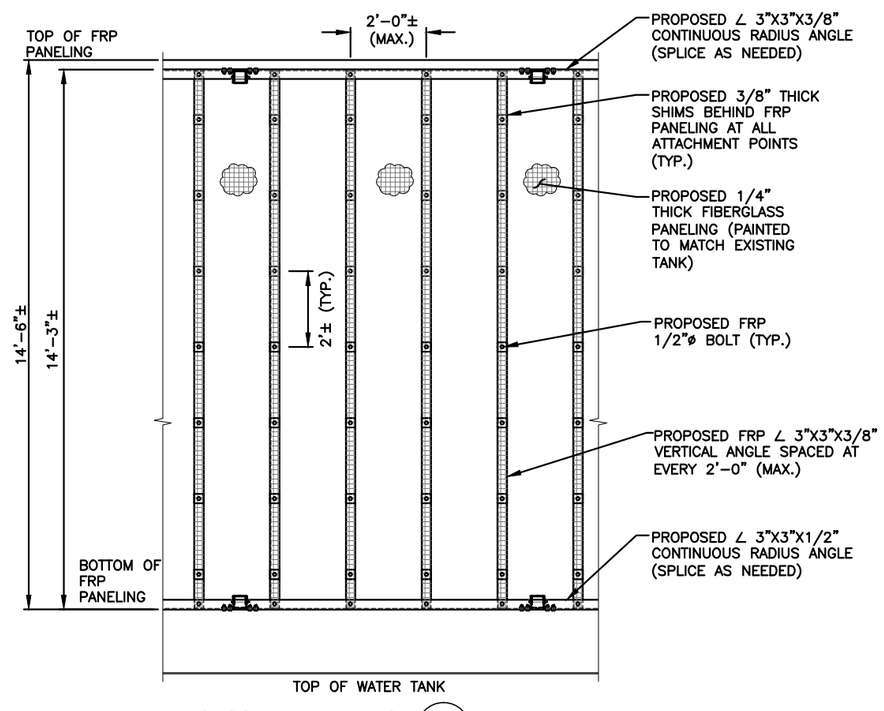

PARTIAL FRP ENCLOSURE ELEVATION (4 / S-2)

22x34 SCALE: 1/2"=1'-0"
11x17 SCALE: 1/4"=1'-0"

0 1'-0" 2'-0" 4'-0" 6'-0"

= INDICATES FRP

= INDICATES STEEL

NOTE:

ENGINEER REVIEWED FRP & STEEL SHOP DRAWINGS REQUIRED PRIOR TO FABRICATION.

STRUCTURAL NOTES:
PRIOR TO COMMENCING CONSTRUCTION, GC SHALL REFER TO STRUCTURAL ANALYSIS PROVIDED BY HDG, DATED: FEBRUARY 06, 2017 TO DETERMINE IF THERE ANY SUPPLEMENTAL OR SPECIAL INSTALLATION REQUIREMENTS, OR RELOCATION ARRANGEMENTS.

NOTE:
IF EXISTING CONDITIONS DIFFER FROM THAT SHOWN ON THE DRAWING, THE ENGINEER SHALL BE NOTIFIED IN WRITING PRIOR TO PROCEEDING WITH CONSTRUCTION.

T-MOBILE NORTHEAST LLC
15 COMMERCE WAY, SUITE B
NORTON, MA 02766
OFFICE: (508) 286-2700
FAX: (508) 286-2893

CENTERLINE COMMUNICATIONS
95 RYAN DRIVE #1
RAYNHAM, MA 02767

HUDSON Design Group LLC
45 BEECHWOOD DRIVE
N. ANDOVER, MA 01845
TEL: (978) 557-5553
FAX: (978) 336-5586

COMMONWEALTH OF MASSACHUSETTS
DEREK J. CREASER
CIVIL
No. 49195
REGISTERED PROFESSIONAL ENGINEER

CHECKED BY: RP

APPROVED BY: DJC

SUBMITTALS

REV.	DATE	DESCRIPTION	BY
2	11/15/17	REVISED FOR CONSTRUCTION	VP
1	04/26/17	ISSUED FOR CONSTRUCTION	VP
0	03/08/17	ISSUED FOR PERMITTING	VP/HH

SITE NUMBER:
4WL0968A

SITE NAME:
LELAND HILL WATER TANK

SITE ADDRESS:
29 LELAND HILL ROAD
GRAFTON, MA 01757
WORCESTER COUNTY

SHEET TITLE
PROPOSED ANTENNA FRAME

SHEET NUMBER
S-2

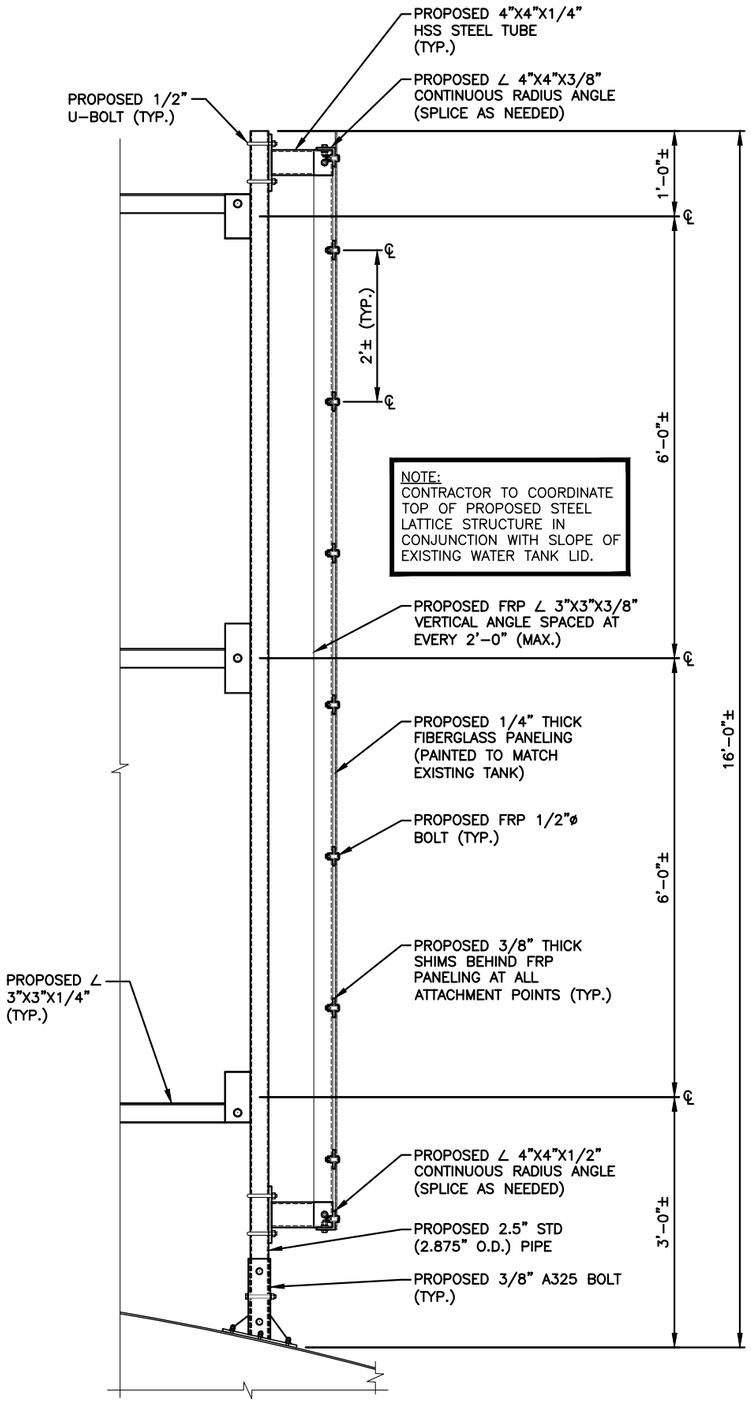

FRP ENCLOSURE SECTION (1 / S-3)
22x34 SCALE: 1"=1'-0"
11x17 SCALE: 1/2"=1'-0"
0 0'-6" 1'-0" 2'-0" 3'-0"

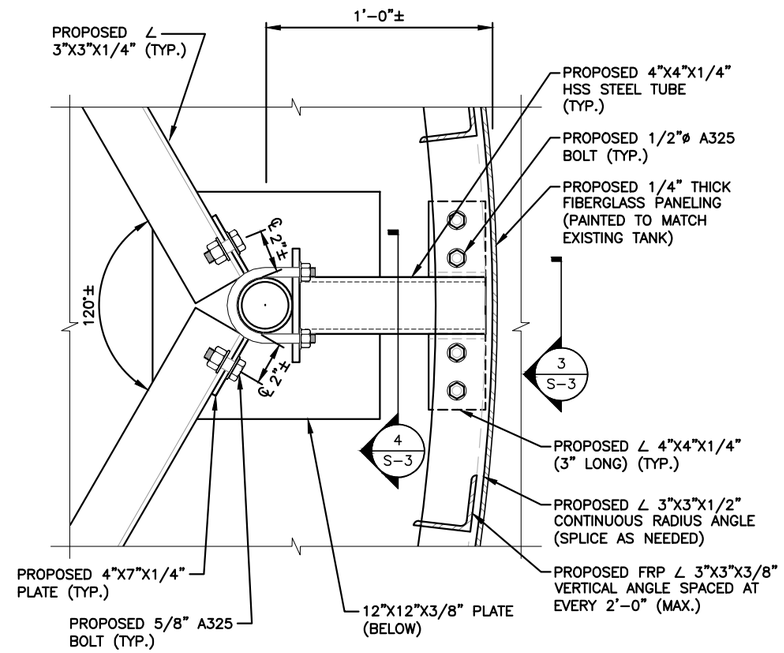

CONNECTION DETAIL (2 / S-3)
22x34 SCALE: 3"=1'-0"
11x17 SCALE: 1-1/2"=1'-0"
0 0'-2" 0'-4" 0'-8" 1'-0"

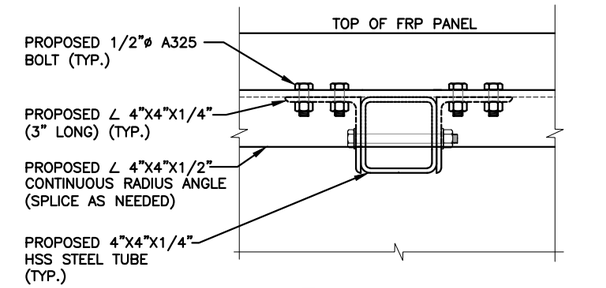

CONNECTION DETAIL (3 / S-3)
22x34 SCALE: 3"=1'-0"
11x17 SCALE: 1-1/2"=1'-0"
0 0'-2" 0'-4" 0'-8" 1'-0"

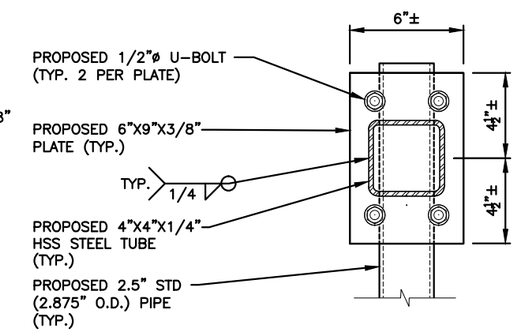

CONNECTION DETAIL (4 / S-3)
22x34 SCALE: 3"=1'-0"
11x17 SCALE: 1-1/2"=1'-0"
0 0'-2" 0'-4" 0'-8" 1'-0"

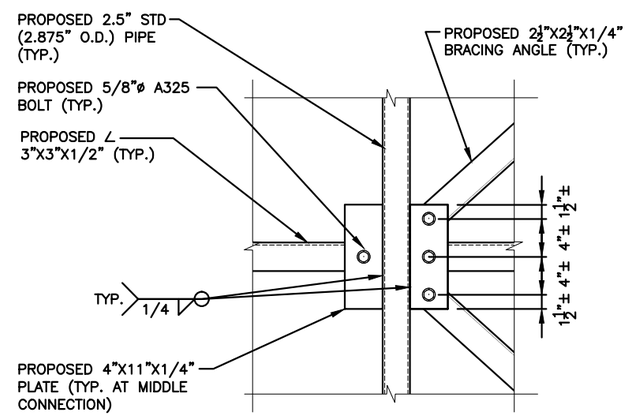

CONNECTION DETAIL (5 / S-3)
22x34 SCALE: 3"=1'-0"
11x17 SCALE: 1-1/2"=1'-0"
0 0'-2" 0'-4" 0'-8" 1'-0"

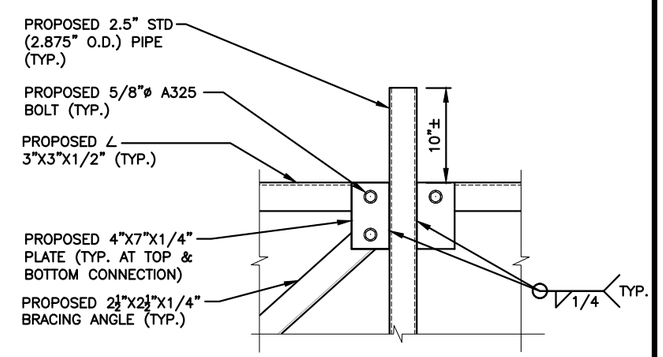

CONNECTION DETAIL (6 / S-3)
22x34 SCALE: 3"=1'-0"
11x17 SCALE: 1-1/2"=1'-0"
0 0'-2" 0'-4" 0'-8" 1'-0"

T-MOBILE NORTHEAST LLC
15 COMMERCE WAY, SUITE B
NORTON, MA 02766
OFFICE: (508) 286-2700
FAX: (508) 286-2893

CENTERLINE COMMUNICATIONS
95 RYAN DRIVE #1
RAYNHAM, MA 02767

HUDSON Design Group LLC
45 BEECHWOOD DRIVE
N. ANDOVER, MA 01845
TEL: (978) 557-5553
FAX: (978) 336-5586

COMMONWEALTH OF MASSACHUSETTS
DEREK J. CREASER
CIVIL
No. 49195
REGISTERED PROFESSIONAL ENGINEER

CHECKED BY: RP

APPROVED BY: DJC

SUBMITTALS

REV.	DATE	DESCRIPTION	BY
2	11/15/17	REVISED FOR CONSTRUCTION	VP
1	04/26/17	ISSUED FOR CONSTRUCTION	VP
0	03/08/17	ISSUED FOR PERMITTING	VP/HH

SITE NUMBER:
4WL0968A

SITE NAME:
LELAND HILL WATER TANK

SITE ADDRESS:
29 LELAND HILL ROAD
GRAFTON, MA 01757
WORCESTER COUNTY

SHEET TITLE
PROPOSED ANTENNA FRAME

SHEET NUMBER
S-3

ELECTRICAL NOTES

1. ALL ELECTRICAL WORK SHALL CONFORM TO THE REQUIREMENTS OF THE NATIONAL ELECTRICAL CODE (NEC) AS WELL AS APPLICABLE STATE AND LOCAL CODES.
2. ALL ELECTRICAL ITEMS SHALL BE U.L. APPROVED OR LISTED AND PROCURED PER SPECIFICATION REQUIREMENTS.
3. THE ELECTRICAL WORK INCLUDES ALL LABOR AND MATERIAL DESCRIBED BY DRAWINGS AND SPECIFICATION INCLUDING INCIDENTAL WORK TO PROVIDE COMPLETE OPERATING AND APPROVED ELECTRICAL SYSTEM.
4. GENERAL CONTRACTOR SHALL PAY FEES FOR PERMITS, AND IS RESPONSIBLE FOR OBTAINING SAID PERMITS AND COORDINATION OF INSPECTIONS.
5. ELECTRICAL AND TELCO WIRING EXPOSED TO WEATHER SHALL BE IN WATER TIGHT GALVANIZED RIGID STEEL CONDUITS OR SCHEDULE 80 PVC (AS PERMITTED BY CODE) AND WHERE REQUIRED IN LIQUID TIGHT FLEXIBLE METAL OR NONMETALLIC CONDUITS.
6. RIGID STEEL CONDUITS SHALL BE GROUNDED AT BOTH ENDS.
7. ELECTRICAL WIRING SHALL BE COPPER WITH TYPE XHHW, THWN, OR THIN INSULATION.
8. RUN ELECTRICAL CONDUIT OR CABLE BETWEEN ELECTRICAL METER BANK AND PROPOSED CELL SITE POWER PEDESTAL AS INDICATED ON THIS DRAWING. PROVIDE FULL LENGTH PULL ROPE. COORDINATE INSTALLATION WITH UTILITY COMPANY.
9. RUN TELCO CONDUIT OR CABLE BETWEEN TELEPHONE UTILITY DEMARCATION POINT AND PROPOSED CELL SITE TELCO CABINET AND BTS CABINET AS INDICATED ON DRAWING A–3. PROVIDE FULL LENGTH PULL ROPE IN INSTALLED TELCO CONDUIT. PROVIDE GREENLEE CONDUIT MEASURING TAPE AT EACH END.
10. ALL EQUIPMENT LOCATED OUTSIDE SHALL HAVE NEMA 3R ENCLOSURE.

LEGEND

A	AMPERE
V	VOLT
KWH	KILOWATT – HOUR
C	CONDUIT
GRC	GALVANIZED RIGID CONDUIT
BGR	BURIED GROUND RING
BTCW	BARE TINNED SOLID COPPER WIRE
G	GROUND
⏚	GROUND
MGB	MASTER GROUND BAR ○ MECHANICAL CONNECTION ● CADWELD CONNECTION
EGB	EQUIPMENT GROUND BAR
—G—	GROUND COPPER WIRE, SIZE AS NOTED
———	EXPOSED WIRING
———	#6G AWG INSULATED STRANDED
———	COAXIAL CABLE/HYBRID CABLE
⊙	5/8"x8' COPPER CLAD STAINLESS STEEL GROUND ROD
⊛	GROUND ROD WITH TEST WELL
—o—●	● EXOTHERMIC (CAD WELD) OR ○ MECHANICAL (COMPRESSION TYPE) CONNECTION
PPC	POWER PROTECTION CABINET
⊗	OMNI–DIRECTIONAL ELECTRONIC MARKER SYSTEM (EMS) BALL

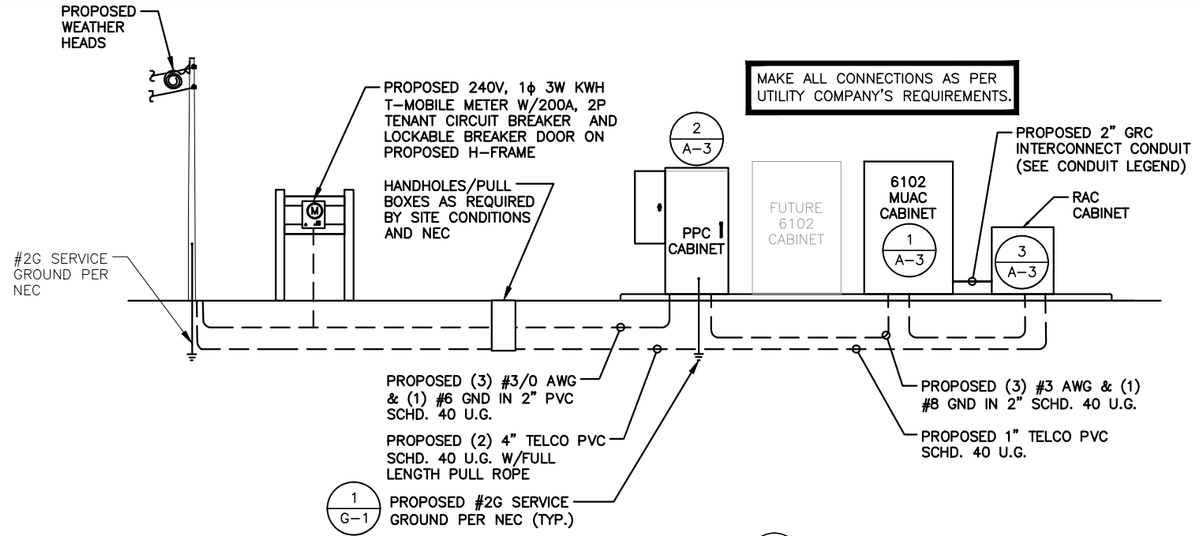

POWER RISER DIAGRAM (1 / E–1)
SCALE: N.T.S

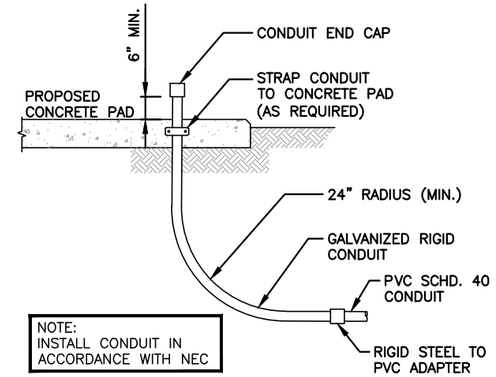

CONDUIT SWEEP DETAIL (2 / E–1)
SCALE: N.T.S

CONDUIT LEGEND

———	2"ø GRC INETRCONNECT KIT, –48V DC, ON CONCRETE PAD, (1) CONDUIT PPC TO 6102 AND (1) CONDUIT PPC TO FUTURE 6102, ANCHOR AT 3' INTERVALS , GROUNDING BOND AT EACH END
—·—·—	2"ø PVC SCHD. 40 CONDUIT, AC–POWER, BELOW CONCRETE PAD, (1) CONDUIT PPC TO 6102, (1) CONDUIT PPC TO RAC
—··—··—	2"ø PVC SCHD. 40 CONDUIT, TELCO, BELOW CONCRETE PAD, (1) CONDUIT PPC TO RAC, (1) CONDUIT RAC TO 6102

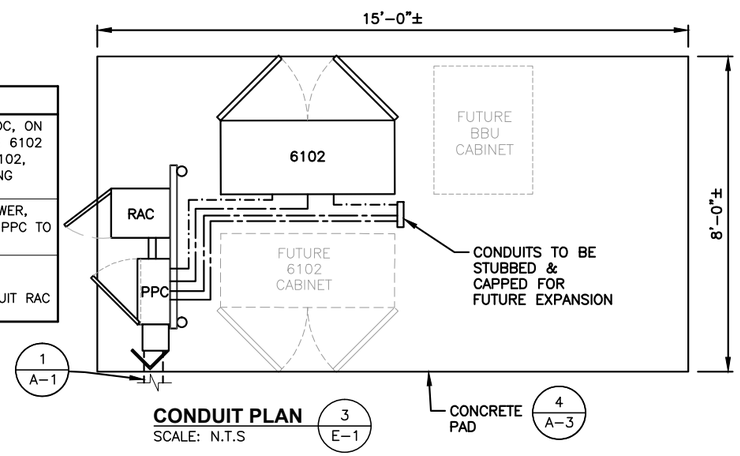

CONDUIT PLAN (3 / E–1)
SCALE: N.T.S

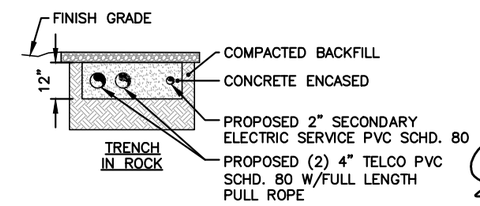

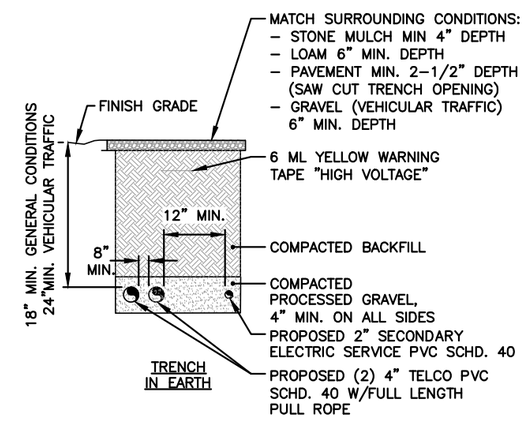

SPECIAL WORK NOTE:
EXISTING UNDERGROUND UTILITY LOCATIONS ARE UNKNOWN. WHERE DIRECTED OR REQUIRED, HAND–EXCAVATE PROPOSED UTILITY TRENCHING

BURIED CONDUIT DETAIL (5 / E–1)
SCALE: N.T.S

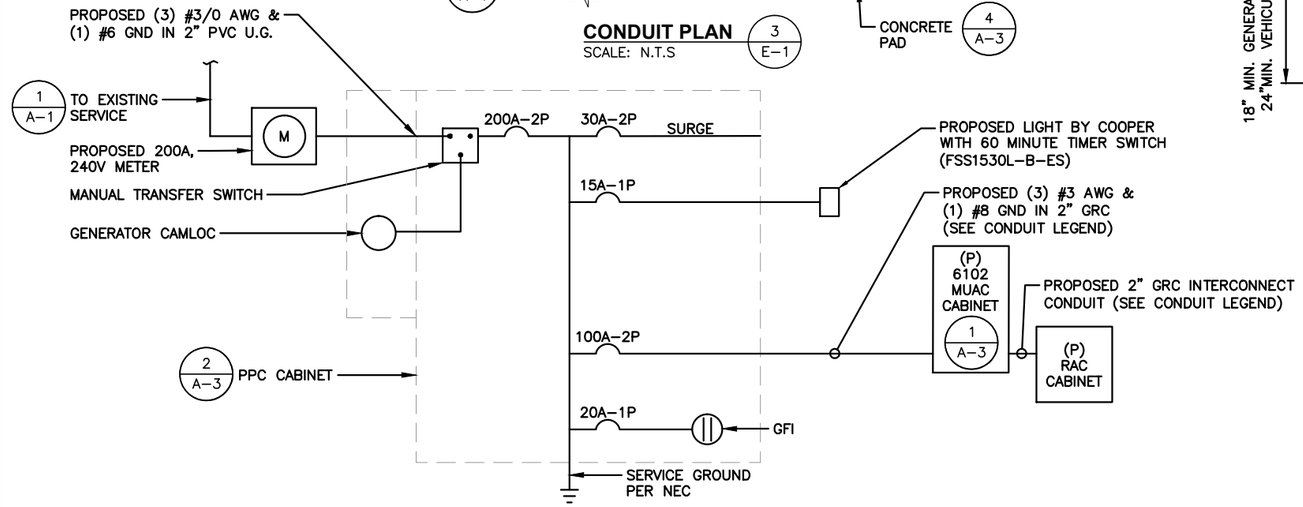

EQUIPMENT ONE LINE DIAGRAM (4 / E–1)
SCALE: N.T.S

T-MOBILE NORTHEAST LLC
15 COMMERCE WAY, SUITE B
NORTON, MA 02766
OFFICE: (508) 286-2700
FAX: (508) 286-2893

CENTERLINE COMMUNICATIONS
95 RYAN DRIVE #1
RAYNHAM, MA 02767

HDG HUDSON Design Group LLC
45 BEECHWOOD DRIVE
N. ANDOVER, MA 01845
TEL: (978) 557-5553
FAX: (978) 336-5586

COMMONWEALTH OF MASSACHUSETTS
DEREK J. CREASER
CIVIL
No. 49195
REGISTERED PROFESSIONAL ENGINEER

CHECKED BY: RP

APPROVED BY: DJC

SUBMITTALS

REV.	DATE	DESCRIPTION	BY
2	11/15/17	REVISED FOR CONSTRUCTION	VP
1	04/26/17	ISSUED FOR CONSTRUCTION	VP
0	03/08/17	ISSUED FOR PERMITTING	VP/HH

SITE NUMBER:
4WL0968A

SITE NAME:
LELAND HILL WATER TANK

SITE ADDRESS:
29 LELAND HILL ROAD
GRAFTON, MA 01757
WORCESTER COUNTY

SHEET TITLE
ELECTRICAL DETAILS & NOTES

SHEET NUMBER
E-1

ELECTRICAL NOTES

1. ALL ELECTRICAL WORK SHALL CONFORM TO THE REQUIREMENTS OF THE NATIONAL ELECTRICAL CODE (NEC) AS WELL AS APPLICABLE STATE AND LOCAL CODES.
2. ALL ELECTRICAL ITEMS SHALL BE U.L. APPROVED OR LISTED AND PROCURED PER SPECIFICATION REQUIREMENTS.
3. THE ELECTRICAL WORK INCLUDES ALL LABOR AND MATERIAL DESCRIBED BY DRAWINGS AND SPECIFICATION INCLUDING INCIDENTAL WORK TO PROVIDE COMPLETE OPERATING AND APPROVED ELECTRICAL SYSTEM.
4. GENERAL CONTRACTOR SHALL PAY FEES FOR PERMITS, AND IS RESPONSIBLE FOR OBTAINING SAID PERMITS AND COORDINATION OF INSPECTIONS.
5. ELECTRICAL AND TELCO WIRING EXPOSED TO WEATHER SHALL BE IN WATER TIGHT GALVANIZED RIGID STEEL CONDUITS OR SCHEDULE 80 PVC (AS PERMITTED BY CODE) AND WHERE REQUIRED IN LIQUID TIGHT FLEXIBLE METAL OR NONMETALLIC CONDUITS.
6. RIGID STEEL CONDUITS SHALL BE GROUNDED AT BOTH ENDS.
7. ELECTRICAL WIRING SHALL BE COPPER WITH TYPE XHHW, THWN, OR THIN INSULATION.
8. RUN ELECTRICAL CONDUIT OR CABLE BETWEEN ELECTRICAL METER BANK AND PROPOSED CELL SITE POWER PEDESTAL AS INDICATED ON THIS DRAWING. PROVIDE FULL LENGTH PULL ROPE. COORDINATE INSTALLATION WITH UTILITY COMPANY.
9. RUN TELCO CONDUIT OR CABLE BETWEEN TELEPHONE UTILITY DEMARCATION POINT AND PROPOSED CELL SITE TELCO CABINET AND BTS CABINET AS INDICATED ON DRAWING A–3. PROVIDE FULL LENGTH PULL ROPE IN INSTALLED TELCO CONDUIT. PROVIDE GREENLEE CONDUIT MEASURING TAPE AT EACH END.
10. ALL EQUIPMENT LOCATED OUTSIDE SHALL HAVE NEMA 3R ENCLOSURE.

LEGEND

A	AMPERE
V	VOLT
KWH	KILOWATT – HOUR
C	CONDUIT
GRC	GALVANIZED RIGID CONDUIT
BGR	BURIED GROUND RING
BTCW	BARE TINNED SOLID COPPER WIRE
G	GROUND
⏚	GROUND
MGB	MASTER GROUND BAR ○ MECHANICAL CONNECTION ● CADWELD CONNECTION
EGB	EQUIPMENT GROUND BAR
—G—	GROUND COPPER WIRE, SIZE AS NOTED
———	EXPOSED WIRING
———	#6G AWG INSULATED STRANDED
———	COAXIAL CABLE/HYBRID CABLE
⊙	5/8"x8' COPPER CLAD STAINLESS STEEL GROUND ROD
⊛	GROUND ROD WITH TEST WELL
—o—●	● EXOTHERMIC (CAD WELD) OR ○ MECHANICAL (COMPRESSION TYPE) CONNECTION
PPC	POWER PROTECTION CABINET
⊗	OMNI–DIRECTIONAL ELECTRONIC MARKER SYSTEM (EMS) BALL

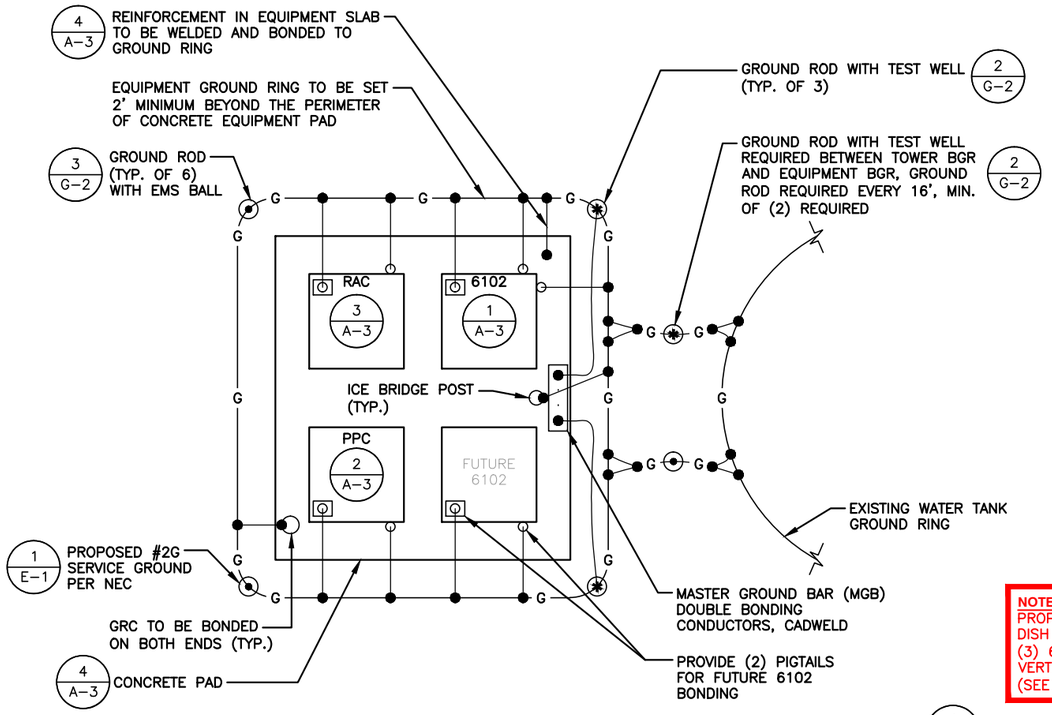

EQUIPMENT PLAN GROUNDING RING SCHEMATIC 1 G–1
SCALE: N.T.S

NOTE:
1. BASE BID TO INCLUDE INSTALLATION OF A BURIED GROUND RING AND (6) GROUND RODS OR SINGLE XIT HORIZONTAL CHEMICAL ROD AS DETERMINED BY FIELD CONDITIONS. ADDITIONAL RODS AS REQUIRED TO ACHIEVE 5 OHMS RESISTANCE.
2. MAXIMUM VERTICAL/HORIZONTAL DISTANCE BETWEEN CABLE GROUNDING KITS SHALL NOT EXCEED 100 FEET. INSTALL ADDITIONAL KITS AS REQUIRED BY FIELD CONDITIONS.
3. ALL CONNECTIONS TO EQUIPMENT PER MANUFACTURER'S GUIDELINES.
4. ALL ABOVE–GRADE DOWNLEADS TO BGR SHALL BE INSTALLED IN 1" NON–METALLIC CONDUIT SECURED EVERY 2' WITH NON–METALLIC CLIPS.

NOTE:
PROPOSED HYBRID CABLE SYSTEM TRUNKS & DISH ANTENNA COAX TO BE RUN IN PROPOSED (3) 6" U.G CONDUITS THEN INSIDE PROPOSED VERTICAL CABLE TRAY ON WATER TANK (SEE DETAILS 1/A–1 & 2/A–4)

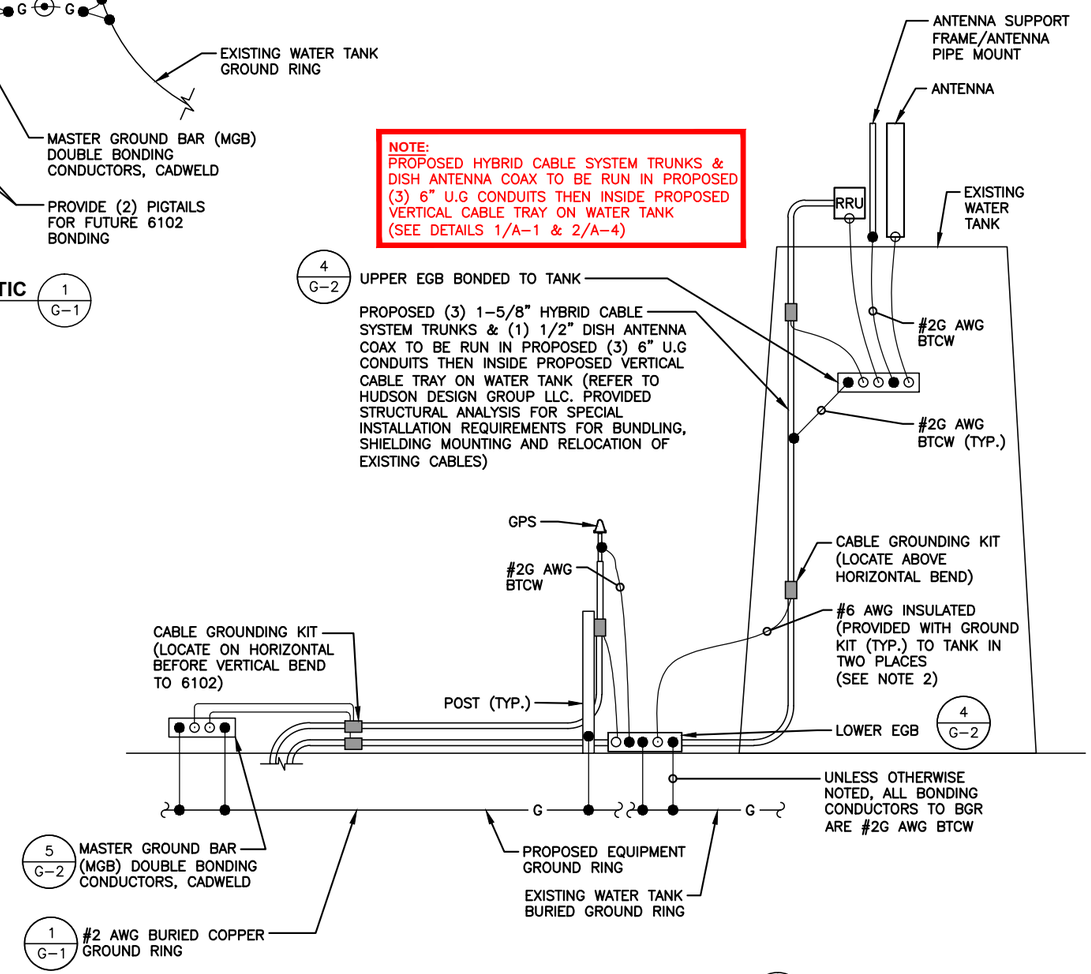

GROUNDING RISER DIAGRAM 2 G–1
SCALE: N.T.S

T-MOBILE NORTHEAST LLC
15 COMMERCE WAY, SUITE B
NORTON, MA 02766
OFFICE: (508) 286-2700
FAX: (508) 286-2893

CENTERLINE COMMUNICATIONS
95 RYAN DRIVE #1
RAYNHAM, MA 02767

HUDSON Design Group LLC
45 BEECHWOOD DRIVE
N. ANDOVER, MA 01845
TEL: (978) 557-5553
FAX: (978) 336-5586

COMMONWEALTH OF MASSACHUSETTS
DEREK J. CREASER
CIVIL
No. 49195
REGISTERED PROFESSIONAL ENGINEER

CHECKED BY: RP

APPROVED BY: DJC

SUBMITTALS

REV.	DATE	DESCRIPTION	BY
2	11/15/17	REVISED FOR CONSTRUCTION	VP
1	04/26/17	ISSUED FOR CONSTRUCTION	VP
0	03/08/17	ISSUED FOR PERMITTING	VP/HH

SITE NUMBER:
4WL0968A

SITE NAME:
LELAND HILL WATER TANK

SITE ADDRESS:
29 LELAND HILL ROAD
GRAFTON, MA 01757
WORCESTER COUNTY

SHEET TITLE
GROUNDING SCHEMATIC & RISER DIAGRAM

SHEET NUMBER
G-1

ELECTRICAL NOTES

1. ALL ELECTRICAL WORK SHALL CONFORM TO THE REQUIREMENTS OF THE NATIONAL ELECTRICAL CODE (NEC) AS WELL AS APPLICABLE STATE AND LOCAL CODES.
2. ALL ELECTRICAL ITEMS SHALL BE U.L. APPROVED OR LISTED AND PROCURED PER SPECIFICATION REQUIREMENTS.
3. THE ELECTRICAL WORK INCLUDES ALL LABOR AND MATERIAL DESCRIBED BY DRAWINGS AND SPECIFICATION INCLUDING INCIDENTAL WORK TO PROVIDE COMPLETE OPERATING AND APPROVED ELECTRICAL SYSTEM.
4. GENERAL CONTRACTOR SHALL PAY FEES FOR PERMITS, AND IS RESPONSIBLE FOR OBTAINING SAID PERMITS AND COORDINATION OF INSPECTIONS.
5. ELECTRICAL AND TELCO WIRING EXPOSED TO WEATHER SHALL BE IN WATER TIGHT GALVANIZED RIGID STEEL CONDUITS OR SCHEDULE 80 PVC (AS PERMITTED BY CODE) AND WHERE REQUIRED IN LIQUID TIGHT FLEXIBLE METAL OR NONMETALLIC CONDUITS.
6. RIGID STEEL CONDUITS SHALL BE GROUNDED AT BOTH ENDS.
7. ELECTRICAL WIRING SHALL BE COPPER WITH TYPE XHHW, THWN, OR THIN INSULATION.
8. RUN ELECTRICAL CONDUIT OR CABLE BETWEEN ELECTRICAL METER BANK AND PROPOSED CELL SITE POWER PEDESTAL AS INDICATED ON THIS DRAWING. PROVIDE FULL LENGTH PULL ROPE. COORDINATE INSTALLATION WITH UTILITY COMPANY.
9. RUN TELCO CONDUIT OR CABLE BETWEEN TELEPHONE UTILITY DEMARCATION POINT AND PROPOSED CELL SITE TELCO CABINET AND BTS CABINET AS INDICATED ON DRAWING A–3. PROVIDE FULL LENGTH PULL ROPE IN INSTALLED TELCO CONDUIT. PROVIDE GREENLEE CONDUIT MEASURING TAPE AT EACH END.
10. ALL EQUIPMENT LOCATED OUTSIDE SHALL HAVE NEMA 3R ENCLOSURE.

LEGEND

A	AMPERE
V	VOLT
KWH	KILOWATT – HOUR
C	CONDUIT
GRC	GALVANIZED RIGID CONDUIT
BGR	BURIED GROUND RING
BTCW	BARE TINNED SOLID COPPER WIRE
G	GROUND
⏚	GROUND
MGB	MASTER GROUND BAR ○ MECHANICAL CONNECTION ● CADWELD CONNECTION
EGB	EQUIPMENT GROUND BAR
—G—	GROUND COPPER WIRE, SIZE AS NOTED
———	EXPOSED WIRING
———	#6G AWG INSULATED STRANDED
———	COAXIAL CABLE/HYBRID CABLE
⊙	5/8"x8' COPPER CLAD STAINLESS STEEL GROUND ROD
⊛	GROUND ROD WITH TEST WELL
—o—●	● EXOTHERMIC (CAD WELD) OR ○ MECHANICAL (COMPRESSION TYPE) CONNECTION
PPC	POWER PROTECTION CABINET
⊗	OMNI–DIRECTIONAL ELECTRONIC MARKER SYSTEM (EMS) BALL

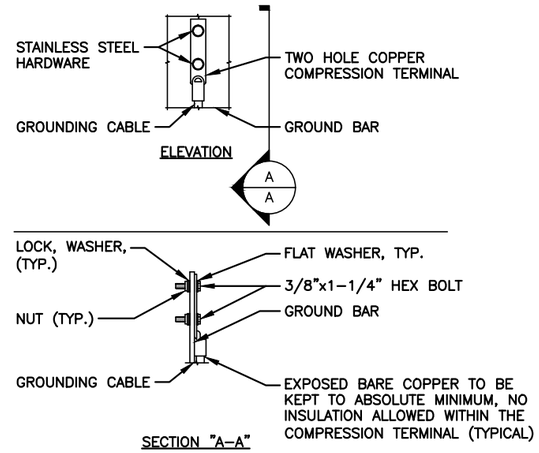

NOTE:
1. "DOUBLING UP" OR "STACKING " OF CONNECTION IS NOT PERMITTED.
2. OXIDE INHIBITING COMPOUND TO BE USED AT ALL LOCATIONS.
3. CADWELD DOWNLEADS FROM UPPER EGB, LOWER EGB, AND MGB.

TYPICAL GROUND BAR CONNECTION DETAIL (1 / G–2)
SCALE: N.T.S

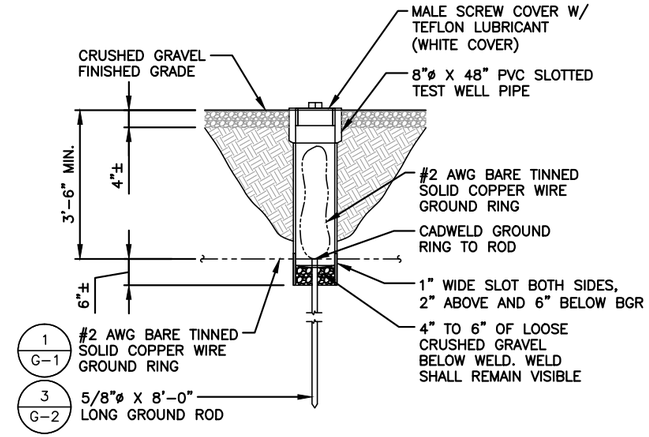

NOTE:
1. PROPOSED BGR TO BE INSTALLED 3'–6" MIN. BELOW GRADE OR BELOW LOCAL FROST DEPTH, WHICHEVER IS GREATER.
2. ONE TEST WELL SHALL BE PROVIDED BETWEEN THE TOWER GROUND LOOP AND TWO ON THE EQUIPMENT GROUND LOOP

GROUND ROD TEST WELL DETAIL (2 / G–2)
SCALE: N.T.S

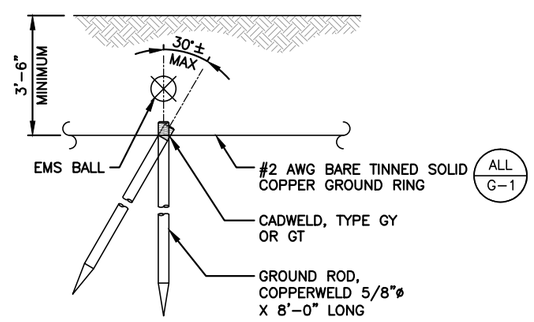

NOTE:
1. PROPOSED BGR TO BE INSTALLED 3'–6" MIN. BELOW GRADE OR BELOW LOCAL FROST DEPTH, WHICHEVER IS GREATER.
2. GROUND ROD SHALL BE DRIVEN VERTICALLY, NOT TO EXCEED 30 DEGREES FROM THE VERTICAL.

GROUND ROD DETAIL (3 / G–2)
SCALE: N.T.S

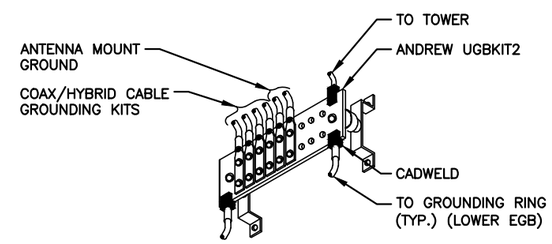

EQUIPMENT GROUND BAR (EGB) (4 / G–2)
SCALE: N.T.S

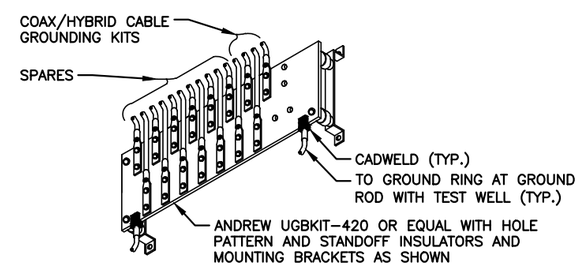

MASTER GROUND BAR (MGB) (5 / G–2)
SCALE: N.T.S

T-MOBILE NORTHEAST LLC
15 COMMERCE WAY, SUITE B
NORTON, MA 02766
OFFICE: (508) 286-2700
FAX: (508) 286-2893

CENTERLINE COMMUNICATIONS
95 RYAN DRIVE #1
RAYNHAM, MA 02767

HUDSON Design Group LLC
45 BEECHWOOD DRIVE
N. ANDOVER, MA 01845
TEL: (978) 557-5553
FAX: (978) 336-5586

COMMONWEALTH OF MASSACHUSETTS
DEREK J. CREASER
CIVIL
No. 49195
REGISTERED PROFESSIONAL ENGINEER

CHECKED BY: RP

APPROVED BY: DJC

SUBMITTALS

REV.	DATE	DESCRIPTION	BY
2	11/15/17	REVISED FOR CONSTRUCTION	VP
1	04/26/17	ISSUED FOR CONSTRUCTION	VP
0	03/08/17	ISSUED FOR PERMITTING	VP/HH

SITE NUMBER:
4WL0968A

SITE NAME:
LELAND HILL WATER TANK

SITE ADDRESS:
29 LELAND HILL ROAD
GRAFTON, MA 01757
WORCESTER COUNTY

SHEET TITLE
GROUNDING DETAILS & NOTES

SHEET NUMBER
G-2

Hudson Design Group LLC

2-C CERTIFICATION

Client: T-Mobile Northeast LLC
15 Commerce Way, Suite B
Norton, MA 02766

Site Name: Leland Hill Water Tank
Site Address: 29 Leland Hill Road, MA 01757

Type of Survey: __X__ GPS Survey __X__ Ground Survey

Horizontal Datum: NAD83 - expressed in degrees of Latitude and Longitude
Vertical Datum: NAVD88 - expressed in feet Above Mean Sea Level (AMSL)

Structure Type:

_____Self-Support Tower	_____Monopole Tower	_____Guyed Tower
_____Wood Pole	__X__Water Tank	_____Smoke Stack
_____Roof Top	_____Church Steeple	_____Temporary Site
_____Silo	_____Other	

Ground Elevation at Structure: Latitude 42° 10′ 34.31″ N
Longitude 71° 42′ 13.67″ W

Ground Elevation at Street Level:	0.0′ (AGL)	415.0′ (AMSL)
Top of Whip Antenna (Highest Appurtenance):	59.0′ (AGL)	474.0′ (AMSL)
Top of Proposed T-Mobile Antennas:	69.0′ (AGL)	484.0′ (AMSL)
Top of Proposed Mounting Structure:	70.0′ (AGL)	485.0′ (AMSL)

Certification: I certify that the latitude and the longitude are accurate to within +/- 50 feet horizontally, and that the ground elevation is accurate to within +/- 20 feet vertically.
The horizontal coordinates are based upon the North American Datum of 1983 (NAD 83) and are expressed in degrees of Latitude and Longitude. The elevations are based on the North American Vertical Datum of 1988 and are expressed in feet Above Mean Sea Level (AMSL).

Signature: _____
Derek J. Creaser, P.E.

COMMONWEALTH OF MASSACHUSETTS
DEREK J. CREASER
CIVIL
No. 49195
REGISTERED PROFESSIONAL ENGINEER

Date: January 27, 2017

p: 978.557.5553 f: 978.336.5586 a: 1600 Osgood Street, Building 20 North, Suite 3090, N. Andover, MA 01845
p: 413.588.8139 f: 413.517.0590 a: 116 Pleasant Street, Ste 302, Easthampton, MA 01027

APPENDIX B:
Site Location Map

Google Maps 42°10'34.3"N 71°42'13.7"W

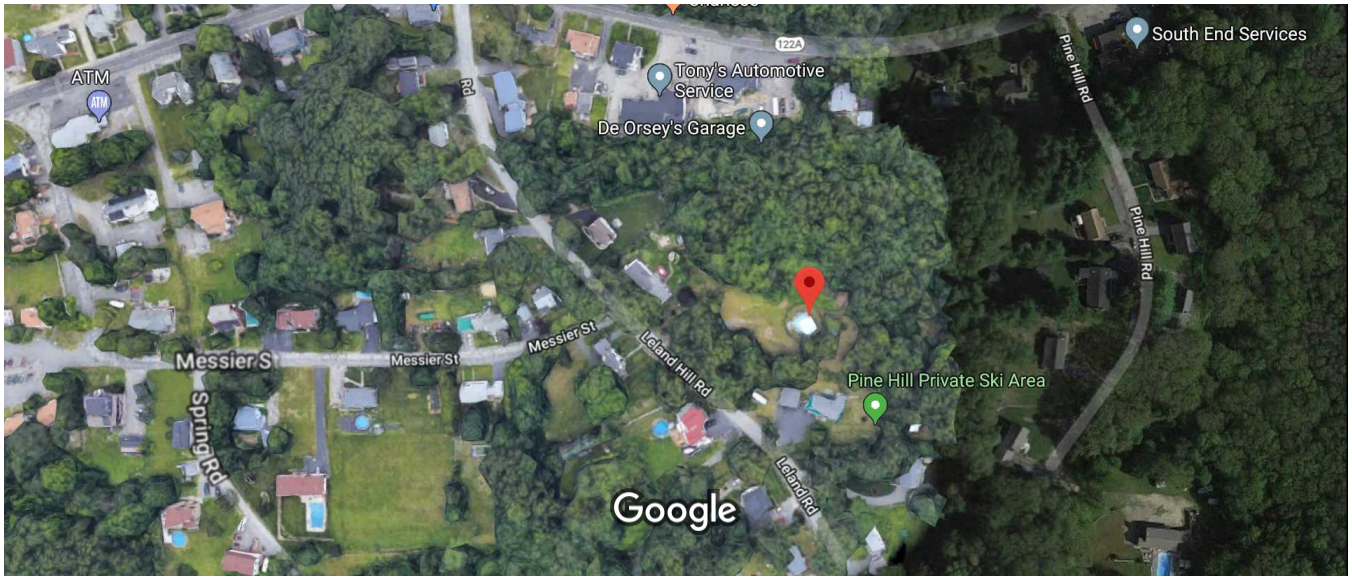

Imagery ©2018 Google, Map data ©2018 Google 200 ft

42°10'34.3"N 71°42'13.7"W

42.176197, -71.703797

APPENDIX C:
Airspace© Studies

Study: 4WL0968A

Worcester, MA

Site Information

Latitude:..... **42-10-34.31 42.1761972222222**

Longitude:..... **71-42-13.67 71.7037972222222**

Ground Elevation:..... **415 feet AMSL**

Structure Height:..... **70 feet AGL**

Overall Height:..... **485 feet AMSL**

Structure Type:..... **Non-Antenna Structure (Alteration)**

City Information

Nearest City:..... **Worcester, MA**

Distance:..... **8.4 Statute Miles**

Direction:..... **320 Degrees (true bearing)**

Nearest Landing Facility Information

Analyzed by Airspace® on: 01-08-2018. Using Airspace® Version 17.11.484

Nearest Public Use landing facility is: **ORH: WORCESTER RGNL**

Distance to ARP is: **57139 ft. or 9.4038 nm.**

Direction to ARP is: **305.55 degrees (true bearing)**

Distance to the nearest runway is: **54126 ft. or 8.908 nm.**

DNE FAR 77.9(a). DNE FAR 77.9(b).
DNE FAR 77.9 IFR Notification Criteria.

DNE FAR 77.9 (EMI Navaid Notification).

LOWEST MOCA FOUND: 2500 AMSL ON AIRWAY V1

INFORMATION ONLY

Private use landing facilities are not studied under FAR Part 77.

Nearest Private Use landing facility is: **4MA3: MILLBURY SAVINGS/WEST**
Distance to this facility is: **3.07 NM**
Direction to this facility is: **287.6 degrees.**

Date Printed: 01-08-2018

AIRSPACE® and TERPS® are registered ® trademarks of Federal Airways & Airspace®
Copyright © 1989 - 2017 Federal Airways & Airspace®

```
*****************************************************
*            Federal Airways & Airspace             *
* Summary Report: Alteration Of Existing Structure *
*               Non-Antenna Structure               *
*****************************************************
```

Airspace User: Your Name

File: 4WL0968A

Location: Worcester, MA

Latitude: 42°-10'-34.31" Longitude: 71°-42'-13.67"

SITE ELEVATION AMSL.....415 ft.
STRUCTURE HEIGHT.....70 ft.
OVERALL HEIGHT AMSL.....485 ft.
SURVEY HEIGHT AMSL.....485 ft.

NOTICE CRITERIA
FAR 77.9(a): NNR (DNE 200 ft AGL)
FAR 77.9(b): NNR (DNE Notice Slope)
FAR 77.9(c): NNR (Not a Traverse Way)
FAR 77.9: NNR FAR 77.9 IFR Straight-In Notice Criteria for ORH
FAR 77.9: NNR FAR 77.9 IFR Straight-In Notice Criteria for 1B6
FAR 77.9(d): NNR (Off Airport Construction)

NR = Notice Required
NNR = Notice Not Required
PNR = Possible Notice Required (depends upon actual IFR procedure)
For new construction review Air Navigation Facilities at bottom of this report.

If the proposed construction is an alteration to an existing structure, notice requirements may be superceded by the item exemptions listed below.

The location and analysis were based upon an existing structure. However, no existing aeronautical study number was identified. If the 'existing' structure penetrates an obstruction surface defined by CFR 77.17, 77.19, 77.21 or 77.23 (see below) it is strongly recommended the FAA be notified of the 'existing' structure to determine obstruction marking or lighting requirements. It is not uncommon for the FAA to issue a Determination of No Hazard (DNH) for an existing structure and modify the airspace to accommodate the structure, should that be required. If the FAA issues a DNH enter the aeronautical study number (ASN) in the space provided on the Airspace Analysis Window Form and re-run Airspace.

No frequencies were identified in this alteration are included in the FAA's Co-Location Policy published in the Federal Register November 15, 2007. Therefore, application of the Co-Location Policy notice exemption rule can not be applied.

Title 14 CFR Part 77.9(e), Notice Criteria Exception:
The location and analysis were based upon an existing structure with the alteration limited to the addition of an antenna with a height no greater than 20 feet. Title 14 CFR Part 77.9(e)(4) exempts the requirement for notice to the FAA; "Any antenna structure of 20 feet or less in height except one that would increase the height of another antenna structure." If the addition of an antenna of 20 feet or less to an existing structure increase the height of the structure to exceed 200 feet AGL or penetrate an obstruction surface defined by Title 14 CFR 77.17, 77.19, 77.21 or 77.23 notice is recommended. This will allow the FAA to determine the level of obstruction lighting required and any aeronautical impacts, if any, to aircraft operations. Notice of an existing structure almost always receives a No Hazard Determination. Please see Summary Report below plus the Airport and Part 77 Reports for application of the above listed CFRs.

OBSTRUCTION STANDARDS
FAR 77.17(a)(1): DNE 499 ft AGL
FAR 77.17(a)(2): DNE - Airport Surface
FAR 77.19(a): DNE - Horizontal Surface
FAR 77.19(b): DNE - Conical Surface
FAR 77.19(c): DNE - Primary Surface
FAR 77.19(d): DNE - Approach Surface
FAR 77.19(e): DNE - Approach Transitional Surface
FAR 77.19(e): DNE - Abeam Transitional Surface

VFR TRAFFIC PATTERN AIRSPACE FOR: ORH: WORCESTER RGNL
Type: A RD: 54126.61 RE: 997.9
FAR 77.17(a)(1): DNE
FAR 77.17(a)(2): DNE - Greater Than 5.99 NM.
VFR Horizontal Surface: DNE
VFR Conical Surface: DNE
VFR Primary Surface: DNE
VFR Approach Surface: DNE
VFR Transitional Surface: DNE

VFR TRAFFIC PATTERN AIRSPACE FOR: 1B6: HOPEDALE INDUSTRIAL PARK
Type: A RD: 57361.36 RE: 268
FAR 77.17(a)(1): DNE
FAR 77.17(a)(2): Does Not Apply.
VFR Horizontal Surface: DNE
VFR Conical Surface: DNE
VFR Primary Surface: DNE
VFR Approach Surface: DNE
VFR Transitional Surface: DNE

TERPS DEPARTURE PROCEDURE (FAA Order 8260.3, Volume 4)
FAR 77.17(a)(3) Departure Surface Criteria (40:1)
DNE Departure Surface

MINIMUM OBSTACLE CLEARANCE ALTITUDE (MOCA)
FAR 77.17(a)(4) MOCA Altitude Enroute Criteria

The Maximum Height Permitted is 1500 ft AMSL

PRIVATE LANDING FACILITIES

FACIL IDENT	TYP	NAME	BEARING To FACIL	RANGE IN NM	DELTA ARP ELEVATION	FAA IFR
4MA3	HEL	MILLBURY SAVINGS/WEST	287.6	3.07	+92	

No Impact to Private Landing Facility
Structure is beyond notice limit by 13654 feet.

MA97	AIR	WATERS	207.56	3.46	-215	

No Impact to VFR Transitional Surface.
Below surface height of 246 ft above ARP.

6MA7	HEL	QUANTUM (SHREWSBURY)	4.97	5.81	-60	

No Impact to Private Landing Facility
Structure 60 ft below heliport.

MA32	HEL	ATLANTIC TRADE	330.14	5.87	-85	

No Impact to Private Landing Facility
Structure 85 ft below heliport.

AIR NAVIGATION ELECTRONIC FACILITIES

FAC IDNT	TYPE	ST AT	FREQ	VECTOR	DIST (ft)	DELTA ELEVA	ST	LOCATION	GRND ANGLE	APCH BEAR
ORH	RADAR WXL	Y		307.61	57177	-518	MA	WORCESTER	-.52	
PUT	VOR/DME	R	117.4	205.29	89008	-167	CT	PUTNAM	-.11	
GDM	VOR/DME	I	110.6	324.71	165311	-795	MA	GARDNER	-.28	
PVD	RADAR	Y	2735.	170.23	168406	-81	RI	THEODORE FRANCIS	-.03	
KBOX	RADAR WXL	Y		117.74	173597	+261	MA	BOSTON WXL	.09	
PVD	VOR/DME	R	115.6	155.72	180730	+436	RI	PROVIDENCE	.14	
BOS	RADAR	Y	2820.	71.37	199045	+435	MA	GENERAL EDWARD LA	.13	
BOS	VOR/DME	R	112.7	70.9	204314	+467	MA	BOSTON	.13	

CFR Title 47, §1.30000-§1.30004
AM STUDY NOT REQUIRED: Structure is not near a FCC licensed AM station.
Movement Method Proof as specified in §73.151(c) is not required.
Please review 'AM Station Report' for details.

Nearest AM Station: WORC @ 10617 meters.

Airspace® Summary Version 17.11.484

AIRSPACE® and TERPS® are registered ® trademarks of Federal Airways & Airspace®
Copyright © 1989 - 2017

01-08-2018
15:39:27

```
*******************************************
*   PUBLIC AIRPORTS IN PROXIMITY OF CASE   *
*******************************************
```

Airspace User: Your Name

File: 4WL0968A

LATITUDE: 42°-10'-34.31" LONGITUDE: 71°-42'-13.67"

SITE ELEVATION AMSL.....415 ft.
STRUCTURE HEIGHT..... 70 ft.
OVERALL HEIGHT AMSL.....485 ft.

FACIL IDENT	TYP	NAME	BEARING To FACIL	DISTANCE IN N.M.	DELTA ARP ELEVATION	FAR P77
ORH	AIR	WORCESTER RGNL	305.55	9.404	-524	YES

This facility has at least one runway over 3,200 feet in length.

Your structure DNE FAR 77.9(a) or 77.9(b) Notice Criteria for this airport. However, you may EXCEED other Notice Standards. As a minimum, please review reports for FAR Part 77 Obstruction Surfaces, Air Navigation and Communication facilities.

You are 54126 feet from the nearest runway threshold and the threshold elevation is 998 feet. Please review runway analysis for remaining airport surfaces.

This airport has both Circling and Straight-In Instrument Procedures. Please review published US Terminal (TERPS®) Approach Procedures for this landing facility.

DNE 77.9 IFR Straight-In Notice Criteria ORH

Category 'D' Circling Approach Area extends 3.78 NM from each runway.

FACIL IDENT	TYP	NAME	BEARING To FACIL	DISTANCE IN N.M.	DELTA ARP ELEVATION	FAR P77
1B6	AIR	HOPEDALE INDUSTRIAL PARK	115.89	9.611	+216	YES

This facility does not have a runway over 3,200 feet in length.

Your structure DNE FAR 77.9(a) or 77.9(b) Notice Criteria for this airport. However, you may EXCEED other Notice Standards. As a minimum, please review reports for FAR Part 77 Obstruction Surfaces, Air Navigation and Communication facilities.

You are 57361 feet from the nearest runway threshold and the threshold

elevation is 268 feet. Please review runway analysis for remaining airport surfaces.

This facility has a circling approach procedure. Circling procedures have a Straight-In segment. The site can be out of the circling approach area and still be in the straight in approach segment. Please review published US Terminal Procedures for this landing facility to determine what impact (if any) this site has on the procedure(s) and/or airport.

DNE 77.9 IFR Straight-In Notice Criteria 1B6

Category 'C' Circling Approach Area extends 2.89 NM from each runway.

FACIL IDENT	TYP	NAME	BEARING To FACIL	DISTANCE IN N.M.	DELTA ARP ELEVATION	FAR P77
9B1	AIR	MARLBORO	40.88	13.25	+200	YES

This facility does not have a runway over 3,200 feet in length.

Your structure DNE FAR 77.9(a) or 77.9(b) Notice Criteria for this airport. However, you may EXCEED other Notice Standards. As a minimum, please review reports for FAR Part 77 Obstruction Surfaces, Air Navigation and Communication facilities.

You are 80384 feet from the nearest runway threshold and the threshold elevation is 278 feet. Please review runway analysis for remaining airport surfaces.

No Circling or Straight-In Instrument Approach Procedures were found for this landing facility or your proposed location is greater than 10 nautical miles from the airport. No Expected TERPS® impact.

FACIL IDENT	TYP	NAME	BEARING To FACIL	DISTANCE IN N.M.	DELTA ARP ELEVATION	FAR P77
60M	AIR	SPENCER	300.62	13.502	-555	YES

This facility does not have a runway over 3,200 feet in length.

Your structure DNE FAR 77.9(a) or 77.9(b) Notice Criteria for this airport. However, you may EXCEED other Notice Standards. As a minimum, please review reports for FAR Part 77 Obstruction Surfaces, Air Navigation and Communication facilities.

You are 81541 feet from the nearest runway threshold and the threshold elevation is 1043 feet. Please review runway analysis for remaining airport surfaces.

No Circling or Straight-In Instrument Approach Procedures were found

for this landing facility or your proposed location is greater than
10 nautical miles from the airport. No Expected TERPS® impact.

FACIL IDENT	TYP	NAME	BEARING To FACIL	DISTANCE IN N.M.	DELTA ARP ELEVATION	FAR P77
3B3	AIR	STERLING	345.21	15.488	+26	YES

This facility does not have a runway over 3,200 feet in length.

Your structure DNE FAR 77.9(a) or 77.9(b) Notice Criteria for this
airport. However, you may EXCEED other Notice Standards. As a minimum,
please review reports for FAR Part 77 Obstruction Surfaces, Air
Navigation and Communication facilities.

You are 92748 feet from the nearest runway threshold and the threshold
elevation is 449 feet. Please review runway analysis for remaining
airport surfaces.

No Circling or Straight-In Instrument Approach Procedures were found
for this landing facility or your proposed location is greater than
10 nautical miles from the airport. No Expected TERPS® impact.

FACIL IDENT	TYP	NAME	BEARING To FACIL	DISTANCE IN N.M.	DELTA ARP ELEVATION	FAR P77
3B0	AIR	SOUTHBRIDGE MUNI	253.13	15.622	-213.8	YES

This facility has at least one runway over 3,200 feet in length.

Your structure DNE FAR 77.9(a) or 77.9(b) Notice Criteria for this
airport. However, you may EXCEED other Notice Standards. As a minimum,
please review reports for FAR Part 77 Obstruction Surfaces, Air
Navigation and Communication facilities.

You are 93906 feet from the nearest runway threshold and the threshold
elevation is 698 feet. Please review runway analysis for remaining
airport surfaces.

This airport has Instrument Procedures. Please review published US
Terminal (TERPS®) Approach Procedures for this landing facility to
determine impact.

FACIL IDENT	TYP	NAME	BEARING To FACIL	DISTANCE IN N.M.	DELTA ARP ELEVATION	FAR P77
MA58	HEL	NATICK ARMY LABORATORIES	66.52	16.666	+342	YES

Your structure DOES NOT EXCEED FAR 77.9(b)(3) Notice Criteria for this

heliport. You are not locating within 5,000 feet of facility. You are beyond limit by: 96264.28 feet.

FACIL IDENT	TYP	NAME	BEARING To FACIL	DISTANCE IN N.M.	DELTA ARP ELEVATION	FAR P77
SFZ	AIR	NORTH CENTRAL STATE	148.27	18.02	+44.5	YES

This facility has at least one runway over 3,200 feet in length.

Your structure DNE FAR 77.9(a) or 77.9(b) Notice Criteria for this airport. However, you may EXCEED other Notice Standards. As a minimum, please review reports for FAR Part 77 Obstruction Surfaces, Air Navigation and Communication facilities.

You are 107982 feet from the nearest runway threshold and the threshold elevation is 420 feet. Please review runway analysis for remaining airport surfaces.

This airport has Instrument Procedures. Please review published US Terminal (TERPS®) Approach Procedures for this landing facility to determine impact.

FACIL IDENT	TYP	NAME	BEARING To FACIL	DISTANCE IN N.M.	DELTA ARP ELEVATION	FAR P77
6B6	AIR	MINUTE MAN AIR FIELD	25.83	18.959	+217	YES

This facility does not have a runway over 3,200 feet in length.

Your structure DNE FAR 77.9(a) or 77.9(b) Notice Criteria for this airport. However, you may EXCEED other Notice Standards. As a minimum, please review reports for FAR Part 77 Obstruction Surfaces, Air Navigation and Communication facilities.

You are 113948 feet from the nearest runway threshold and the threshold elevation is 267 feet. Please review runway analysis for remaining airport surfaces.

This airport has Instrument Procedures. Please review published US Terminal (TERPS®) Approach Procedures for this landing facility to determine impact.

FACIL IDENT	TYP	NAME	BEARING To FACIL	DISTANCE IN N.M.	DELTA ARP ELEVATION	FAR P77
C44	AIR	TOUTANT	229.7	20.51	-285	YES

This facility does not have a runway over 3,200 feet in length.

Your structure DNE FAR 77.9(a) or 77.9(b) Notice Criteria for this airport. However, you may EXCEED other Notice Standards. As a minimum, please review reports for FAR Part 77 Obstruction Surfaces, Air Navigation and Communication facilities.

You are 124409 feet from the nearest runway threshold and the threshold elevation is 772 feet. Please review runway analysis for remaining airport surfaces.

No Circling or Straight-In Instrument Approach Procedures were found for this landing facility or your proposed location is greater than 10 nautical miles from the airport. No Expected TERPS® impact.

FACIL IDENT	TYP	NAME	BEARING To FACIL	DISTANCE IN N.M.	DELTA ARP ELEVATION	FAR P77
01NX	HEL	PROPOSED 01NX	207.47	21.745	+217	YES

Your structure DOES NOT EXCEED FAR 77.9(b)(3) Notice Criteria for this heliport. You are not locating within 5,000 feet of facility. You are beyond limit by: 127124.8 feet.

FACIL IDENT	TYP	NAME	BEARING To FACIL	DISTANCE IN N.M.	DELTA ARP ELEVATION	FAR P77
8B5	AIR	TANNER-HILLER	299.79	21.847	-104	YES

This facility does not have a runway over 3,200 feet in length.

Your structure DNE FAR 77.9(a) or 77.9(b) Notice Criteria for this airport. However, you may EXCEED other Notice Standards. As a minimum, please review reports for FAR Part 77 Obstruction Surfaces, Air Navigation and Communication facilities.

You are 132346 feet from the nearest runway threshold and the threshold elevation is 589 feet. Please review runway analysis for remaining airport surfaces.

No Circling or Straight-In Instrument Approach Procedures were found for this landing facility or your proposed location is greater than 10 nautical miles from the airport. No Expected TERPS® impact.

FACIL IDENT	TYP	NAME	BEARING To FACIL	DISTANCE IN N.M.	DELTA ARP ELEVATION	FAR P77
FIT	AIR	FITCHBURG MUNI	353.85	22.802	+137.5	YES

This facility has at least one runway over 3,200 feet in length.

Your structure DNE FAR 77.9(a) or 77.9(b) Notice Criteria for this airport. However, you may EXCEED other Notice Standards. As a minimum, please review reports for FAR Part 77 Obstruction Surfaces, Air Navigation and Communication facilities.

You are 136665 feet from the nearest runway threshold and the threshold elevation is 329 feet. Please review runway analysis for remaining airport surfaces.

This airport has Instrument Procedures. Please review published US Terminal (TERPS®) Approach Procedures for this landing facility to determine impact.

FACIL IDENT	TYP	NAME	BEARING To FACIL	DISTANCE IN N.M.	DELTA ARP ELEVATION	FAR P77
LZD	AIR	DANIELSON	202.37	23.13	+247	YES

This facility does not have a runway over 3,200 feet in length.

Your structure DNE FAR 77.9(a) or 77.9(b) Notice Criteria for this airport. However, you may EXCEED other Notice Standards. As a minimum, please review reports for FAR Part 77 Obstruction Surfaces, Air Navigation and Communication facilities.

You are 140353 feet from the nearest runway threshold and the threshold elevation is 231 feet. Please review runway analysis for remaining airport surfaces.

This airport has Instrument Procedures. Please review published US Terminal (TERPS®) Approach Procedures for this landing facility to determine impact.

FACIL IDENT	TYP	NAME	BEARING To FACIL	DISTANCE IN N.M.	DELTA ARP ELEVATION	FAR P77
OWD	AIR	NORWOOD MEMORIAL	87.74	23.691	+435.8	YES

This facility has at least one runway over 3,200 feet in length.

Your structure DNE FAR 77.9(a) or 77.9(b) Notice Criteria for this airport. However, you may EXCEED other Notice Standards. As a minimum, please review reports for FAR Part 77 Obstruction Surfaces, Air Navigation and Communication facilities.

You are 142493 feet from the nearest runway threshold and the threshold elevation is 49 feet. Please review runway analysis for remaining airport surfaces.

This airport has Instrument Procedures. Please review published US Terminal (TERPS®) Approach Procedures for this landing facility to determine impact.

FACIL IDENT	TYP	NAME	BEARING To FACIL	DISTANCE IN N.M.	DELTA ARP ELEVATION	FAR P77
1B9	AIR	MANSFIELD MUNI	115.14	24.911	+363.5	YES

This facility has at least one runway over 3,200 feet in length.

Your structure DNE FAR 77.9(a) or 77.9(b) Notice Criteria for this airport. However, you may EXCEED other Notice Standards. As a minimum, please review reports for FAR Part 77 Obstruction Surfaces, Air Navigation and Communication facilities.

You are 150188 feet from the nearest runway threshold and the threshold elevation is 122 feet. Please review runway analysis for remaining airport surfaces.

This airport has Instrument Procedures. Please review published US Terminal (TERPS®) Approach Procedures for this landing facility to determine impact.

FACIL IDENT	TYP	NAME	BEARING To FACIL	DISTANCE IN N.M.	DELTA ARP ELEVATION	FAR P77
BED	AIR	LAURENCE G HANSCOM FLD	46.2	25.526	+353	YES

This facility has at least one runway over 3,200 feet in length.

Your structure DNE FAR 77.9(a) or 77.9(b) Notice Criteria for this airport. However, you may EXCEED other Notice Standards. As a minimum, please review reports for FAR Part 77 Obstruction Surfaces, Air Navigation and Communication facilities.

You are 151889 feet from the nearest runway threshold and the threshold elevation is 128 feet. Please review runway analysis for remaining airport surfaces.

This airport has Instrument Procedures. Please review published US Terminal (TERPS®) Approach Procedures for this landing facility to determine impact.

FACIL IDENT	TYP	NAME	BEARING To FACIL	DISTANCE IN N.M.	DELTA ARP ELEVATION	FAR P77
GDM	AIR	GARDNER MUNI	328.32	26.375	-469.1	YES

This facility does not have a runway over 3,200 feet in length.

Your structure DNE FAR 77.9(a) or 77.9(b) Notice Criteria for this airport. However, you may EXCEED other Notice Standards. As a minimum, please review reports for FAR Part 77 Obstruction Surfaces, Air Navigation and Communication facilities.

You are 158769 feet from the nearest runway threshold and the threshold elevation is 924 feet. Please review runway analysis for remaining airport surfaces.

This airport has Instrument Procedures. Please review published US Terminal (TERPS®) Approach Procedures for this landing facility to determine impact.

FACIL IDENT	TYP	NAME	BEARING To FACIL	DISTANCE IN N.M.	DELTA ARP ELEVATION	FAR P77
36MA	HEL	BETH ISRAEL DEACONESS MEDICA	69.68	28.217	+324	YES

Your structure DOES NOT EXCEED FAR 77.9(b)(3) Notice Criteria for this heliport. You are not locating within 5,000 feet of facility. You are beyond limit by: 166449.3 feet.

FACIL IDENT	TYP	NAME	BEARING To FACIL	DISTANCE IN N.M.	DELTA ARP ELEVATION	FAR P77
MA39	HEL	BRIGHAM & WOMEN'S HOSPITAL	69.99	28.305	+288	YES

Your structure DOES NOT EXCEED FAR 77.9(b)(3) Notice Criteria for this heliport. You are not locating within 5,000 feet of facility. You are beyond limit by: 166984 feet.

FACIL IDENT	TYP	NAME	BEARING To FACIL	DISTANCE IN N.M.	DELTA ARP ELEVATION	FAR P77
0MA4	HEL	BOSTON MEDICAL CENTER HOSPIT	71.23	29.724	+470	YES

Your structure DOES NOT EXCEED FAR 77.9(b)(3) Notice Criteria for this heliport. You are not locating within 5,000 feet of facility. You are beyond limit by: 175606 feet.

FACIL IDENT	TYP	NAME	BEARING To FACIL	DISTANCE IN N.M.	DELTA ARP ELEVATION	FAR P77
PVD	AIR	THEODORE FRANCIS GREEN STATE	155.68	29.9	+431	YES

This facility has at least one runway over 3,200 feet in length.

Your structure DNE FAR 77.9(a) or 77.9(b) Notice Criteria for this airport. However, you may EXCEED other Notice Standards. As a minimum, please review reports for FAR Part 77 Obstruction Surfaces, Air Navigation and Communication facilities.

You are 178049 feet from the nearest runway threshold and the threshold elevation is 54 feet. Please review runway analysis for remaining airport surfaces.

This airport has Instrument Procedures. Please review published US Terminal (TERPS®) Approach Procedures for this landing facility to determine impact.

FACIL IDENT	TYP	NAME	BEARING To FACIL	DISTANCE IN N.M.	DELTA ARP ELEVATION	FAR P77
MA66	HEL	TUFTS MEDICAL CENTER	69.83	30.356	+255	YES

Your structure DOES NOT EXCEED FAR 77.9(b)(3) Notice Criteria for this heliport. You are not locating within 5,000 feet of facility. You are beyond limit by: 179446.1 feet.

FACIL IDENT	TYP	NAME	BEARING To FACIL	DISTANCE IN N.M.	DELTA ARP ELEVATION	FAR P77
0MA1	HEL	MASSACHUSETTS GENERAL HOSPIT	68.1	30.424	+290	YES

Your structure DOES NOT EXCEED FAR 77.9(b)(3) Notice Criteria for this heliport. You are not locating within 5,000 feet of facility. You are beyond limit by: 179859.3 feet.

FACIL IDENT	TYP	NAME	BEARING To FACIL	DISTANCE IN N.M.	DELTA ARP ELEVATION	FAR P77
BOS	AIR	GENERAL EDWARD LAWRENCE LOGA	69.93	33.027	+465.9	YES

This facility has at least one runway over 3,200 feet in length.

Your structure DNE FAR 77.9(a) or 77.9(b) Notice Criteria for this airport. However, you may EXCEED other Notice Standards. As a minimum, please review reports for FAR Part 77 Obstruction Surfaces, Air Navigation and Communication facilities.

You are 195589 feet from the nearest runway threshold and the threshold elevation is 17 feet. Please review runway analysis for remaining airport surfaces.

This airport has Instrument Procedures. Please review published US

Terminal (TERPS®) Approach Procedures for this landing facility to determine impact.

FACIL IDENT	TYP	NAME	BEARING To FACIL	DISTANCE IN N.M.	DELTA ARP ELEVATION	FAR P77
IJD	AIR	WINDHAM	219.28	33.573	+238.9	YES

This facility has at least one runway over 3,200 feet in length.

Your structure DNE FAR 77.9(a) or 77.9(b) Notice Criteria for this airport. However, you may EXCEED other Notice Standards. As a minimum, please review reports for FAR Part 77 Obstruction Surfaces, Air Navigation and Communication facilities.

You are 201487 feet from the nearest runway threshold and the threshold elevation is 240 feet. Please review runway analysis for remaining airport surfaces.

This airport has Instrument Procedures. Please review published US Terminal (TERPS®) Approach Procedures for this landing facility to determine impact.

FACIL IDENT	TYP	NAME	BEARING To FACIL	DISTANCE IN N.M.	DELTA ARP ELEVATION	FAR P77
ORE	AIR	ORANGE MUNI	312.44	35.133	-70.6	YES

This facility has at least one runway over 3,200 feet in length.

Your structure DNE FAR 77.9(a) or 77.9(b) Notice Criteria for this airport. However, you may EXCEED other Notice Standards. As a minimum, please review reports for FAR Part 77 Obstruction Surfaces, Air Navigation and Communication facilities.

You are 211191 feet from the nearest runway threshold and the threshold elevation is 551 feet. Please review runway analysis for remaining airport surfaces.

This airport has Instrument Procedures. Please review published US Terminal (TERPS®) Approach Procedures for this landing facility to determine impact.

FACIL IDENT	TYP	NAME	BEARING To FACIL	DISTANCE IN N.M.	DELTA ARP ELEVATION	FAR P77
TAN	AIR	TAUNTON MUNI - KING FIELD	120.72	35.672	+443.5	YES

This facility has at least one runway over 3,200 feet in length.

Your structure DNE FAR 77.9(a) or 77.9(b) Notice Criteria for this airport. However, you may EXCEED other Notice Standards. As a minimum, please review reports for FAR Part 77 Obstruction Surfaces, Air Navigation and Communication facilities.

You are 214881 feet from the nearest runway threshold and the threshold elevation is 27 feet. Please review runway analysis for remaining airport surfaces.

This airport has Instrument Procedures. Please review published US Terminal (TERPS®) Approach Procedures for this landing facility to determine impact.

FACIL IDENT	TYP	NAME	BEARING To FACIL	DISTANCE IN N.M.	DELTA ARP ELEVATION	FAR P77
NH37	HEL	SOUTHERN NH MEDICAL CENTER	17.11	36.375	+293	YES

Your structure DOES NOT EXCEED FAR 77.9(b)(3) Notice Criteria for this heliport. You are not locating within 5,000 feet of facility. You are beyond limit by: 216018.1 feet.

FACIL IDENT	TYP	NAME	BEARING To FACIL	DISTANCE IN N.M.	DELTA ARP ELEVATION	FAR P77
1M8	AIR	MYRICKS	123.93	36.424	+412	YES

This facility does not have a runway over 3,200 feet in length.

Your structure DNE FAR 77.9(a) or 77.9(b) Notice Criteria for this airport. However, you may EXCEED other Notice Standards. As a minimum, please review reports for FAR Part 77 Obstruction Surfaces, Air Navigation and Communication facilities.

You are 220508 feet from the nearest runway threshold and the threshold elevation is 65 feet. Please review runway analysis for remaining airport surfaces.

No Circling or Straight-In Instrument Approach Procedures were found for this landing facility or your proposed location is greater than 10 nautical miles from the airport. No Expected TERPS® impact.

FACIL IDENT	TYP	NAME	BEARING To FACIL	DISTANCE IN N.M.	DELTA ARP ELEVATION	FAR P77
7B9	AIR	ELLINGTON	245.7	36.881	+232	YES

This facility does not have a runway over 3,200 feet in length.

Your structure DNE FAR 77.9(a) or 77.9(b) Notice Criteria for this airport. However, you may EXCEED other Notice Standards. As a minimum, please review reports for FAR Part 77 Obstruction Surfaces, Air Navigation and Communication facilities.

You are 223768 feet from the nearest runway threshold and the threshold elevation is 248 feet. Please review runway analysis for remaining airport surfaces.

No Circling or Straight-In Instrument Approach Procedures were found for this landing facility or your proposed location is greater than 10 nautical miles from the airport. No Expected TERPS® impact.

FACIL IDENT	TYP	NAME	BEARING To FACIL	DISTANCE IN N.M.	DELTA ARP ELEVATION	FAR P77
CEF	AIR	WESTOVER ARB/METROPOLITAN	271.92	37.08	+243.8	YES

This facility has at least one runway over 3,200 feet in length.

Your structure DNE FAR 77.9(a) or 77.9(b) Notice Criteria for this airport. However, you may EXCEED other Notice Standards. As a minimum, please review reports for FAR Part 77 Obstruction Surfaces, Air Navigation and Communication facilities.

You are 222275 feet from the nearest runway threshold and the threshold elevation is 240 feet. Please review runway analysis for remaining airport surfaces.

This airport has Instrument Procedures. Please review published US Terminal (TERPS®) Approach Procedures for this landing facility to determine impact.

FACIL IDENT	TYP	NAME	BEARING To FACIL	DISTANCE IN N.M.	DELTA ARP ELEVATION	FAR P77
OQU	AIR	QUONSET STATE	159.47	37.1	+466.7	YES

This facility has at least one runway over 3,200 feet in length.

Your structure DNE FAR 77.9(a) or 77.9(b) Notice Criteria for this airport. However, you may EXCEED other Notice Standards. As a minimum, please review reports for FAR Part 77 Obstruction Surfaces, Air Navigation and Communication facilities.

You are 220936 feet from the nearest runway threshold and the threshold elevation is 18 feet. Please review runway analysis for remaining airport surfaces.

This airport has Instrument Procedures. Please review published US Terminal (TERPS®) Approach Procedures for this landing facility to determine impact.

FACIL IDENT	TYP	NAME	BEARING To FACIL	DISTANCE IN N.M.	DELTA ARP ELEVATION	FAR P77
ASH	AIR	BOIRE FIELD	12.97	37.327	+284.6	YES

This facility has at least one runway over 3,200 feet in length.

Your structure DNE FAR 77.9(a) or 77.9(b) Notice Criteria for this airport. However, you may EXCEED other Notice Standards. As a minimum, please review reports for FAR Part 77 Obstruction Surfaces, Air Navigation and Communication facilities.

You are 225790 feet from the nearest runway threshold and the threshold elevation is 192 feet. Please review runway analysis for remaining airport surfaces.

This airport has Instrument Procedures. Please review published US Terminal (TERPS®) Approach Procedures for this landing facility to determine impact.

FACIL IDENT	TYP	NAME	BEARING To FACIL	DISTANCE IN N.M.	DELTA ARP ELEVATION	FAR P77
MA68	HEL	MASSACHUSETTS MUTUAL LIFE IN	264.22	37.608	+283	YES

Your structure DOES NOT EXCEED FAR 77.9(b)(3) Notice Criteria for this heliport. You are not locating within 5,000 feet of facility. You are beyond limit by: 223510 feet.

FACIL IDENT	TYP	NAME	BEARING To FACIL	DISTANCE IN N.M.	DELTA ARP ELEVATION	FAR P77
28M	AIR	CRANLAND	103.49	39.718	+414	YES

This facility does not have a runway over 3,200 feet in length.

Your structure DNE FAR 77.9(a) or 77.9(b) Notice Criteria for this airport. However, you may EXCEED other Notice Standards. As a minimum, please review reports for FAR Part 77 Obstruction Surfaces, Air Navigation and Communication facilities.

You are 240880 feet from the nearest runway threshold and the threshold elevation is 71 feet. Please review runway analysis for remaining airport surfaces.

No Circling or Straight-In Instrument Approach Procedures were found for this landing facility or your proposed location is greater than 10 nautical miles from the airport. No Expected TERPS® impact.

FACIL IDENT	TYP	NAME	BEARING To FACIL	DISTANCE IN N.M.	DELTA ARP ELEVATION	FAR P77
MA6	SEA	MONPONSETT POND	104.84	39.726	+433	YES

This facility has at least one runway over 3,200 feet in length.

Your structure DNE FAR 77.9(a) or 77.9(b) Notice Criteria for this airport. However, you may EXCEED other Notice Standards. As a minimum, please review reports for FAR Part 77 Obstruction Surfaces, Air Navigation and Communication facilities.

You are 236324 feet from the nearest runway threshold and the threshold elevation is 55 feet. Please review runway analysis for remaining airport surfaces.

No Circling or Straight-In Instrument Approach Procedures were found for this landing facility or your proposed location is greater than 10 nautical miles from the airport. No Expected TERPS® impact.

FACIL IDENT	TYP	NAME	BEARING To FACIL	DISTANCE IN N.M.	DELTA ARP ELEVATION	FAR P77
AFN	AIR	JAFFREY AIRPORT-SILVER RANCH	340.7	39.986	-554	YES

This facility does not have a runway over 3,200 feet in length.

Your structure DNE FAR 77.9(a) or 77.9(b) Notice Criteria for this airport. However, you may EXCEED other Notice Standards. As a minimum, please review reports for FAR Part 77 Obstruction Surfaces, Air Navigation and Communication facilities.

You are 241548 feet from the nearest runway threshold and the threshold elevation is 1013 feet. Please review runway analysis for remaining airport surfaces.

This airport has Instrument Procedures. Please review published US Terminal (TERPS®) Approach Procedures for this landing facility to determine impact.

THE NEAREST AIRPORT TO CASE COORDINATES IS: ORH

WORCESTER RGNL is an Airport type landing facility and is associated with the city of WORCESTER, MA. The facility is eligible for Study under FAR Part 77 sub-Part C.

Its Reference Point (ARP) elevation is: 1009 feet AMSL and you are locating 57140 feet from this landing facility.

Airspace® Version 17.11.484

AIRSPACE® and TERPS® are registered ® trademarks of Federal Airways & Airspace®
Copyright © 1989 - 2017

01-08-2018
15:39:19

The mathematical algorithms used by this program are derived directly from Federal Aviation Regulations Part 77, sub-part C.

```
*******************************************************
*                  INSTRUMENT PROCEDURES              *
*******************************************************

IDENT   TYPE  DESCRIPTION
-----   ----  ----------------------------------------
ORH     APD   AIRPORT DIAGRAM
ORH     HOT   HOT SPOT
ORH     IAP   RNAV (GPS) RWY 29
ORH     IAP   RNAV (GPS) RWY 33
ORH     IAP   RNAV (GPS) RWY 11
ORH     IAP   VOR/DME RWY 33
ORH     IAP   ILS OR LOC RWY 11
ORH     IAP   ILS OR LOC RWY 29
ORH     MIN   TAKEOFF MINIMUMS
ORH     MIN   ALTERNATE MINIMUMS
ORH     STAR  STELA ONE CONT.1
ORH     STAR  STELA ONE

1B6     IAP   RNAV (GPS)-A
1B6     MIN   TAKEOFF MINIMUMS

3B0     IAP   RNAV (GPS) RWY 02
3B0     IAP   VOR/DME-B
3B0     MIN   TAKEOFF MINIMUMS

SFZ     IAP   RNAV (GPS) RWY 05
SFZ     IAP   RNAV (GPS) RWY 23
SFZ     IAP   LOC RWY 05
SFZ     IAP   VOR-A
SFZ     IAP   VOR-B
SFZ     MIN   ALTERNATE MINIMUMS
SFZ     MIN   TAKEOFF MINIMUMS
SFZ     STAR  WIPOR THREE (RNAV)
```

6B6	IAP	VOR/DME RWY 21
6B6	IAP	RNAV (GPS) RWY 21
6B6	MIN	TAKEOFF MINIMUMS
FIT	IAP	RNAV (GPS) RWY 14
FIT	IAP	NDB-A
FIT	IAP	RNAV (GPS) RWY 32
FIT	IAP	RNAV (GPS) RWY 20
FIT	MIN	ALTERNATE MINIMUMS
FIT	MIN	TAKEOFF MINIMUMS
FIT	STAR	GRAYM FOUR
LZD	IAP	VOR-A
LZD	MIN	TAKEOFF MINIMUMS
OWD	APD	AIRPORT DIAGRAM
OWD	DP	NORWOOD TWO
OWD	DP	NORWOOD TWO CONT.1
OWD	HOT	HOT SPOT
OWD	IAP	RNAV (GPS) RWY 35
OWD	IAP	LOC RWY 35
OWD	LAH	LAHSO
OWD	MIN	ALTERNATE MINIMUMS
OWD	MIN	TAKEOFF MINIMUMS
OWD	STAR	WOONS TWO
1B9	IAP	RNAV (GPS) RWY 32
1B9	MIN	TAKEOFF MINIMUMS
1B9	STAR	WOONS TWO
BED	APD	AIRPORT DIAGRAM
BED	DP	HANSCOM TWO
BED	DP	HANSCOM TWO CONT.1
BED	HOT	HOT SPOT
BED	IAP	RNAV (GPS) Z RWY 11
BED	IAP	VOR RWY 23
BED	IAP	RNAV (GPS) RWY 23
BED	IAP	RNAV (RNP) Y RWY 29
BED	IAP	RNAV (RNP) Y RWY 11
BED	IAP	ILS OR LOC RWY 29
BED	IAP	RNAV (GPS) Z RWY 29
BED	IAP	ILS OR LOC RWY 11
BED	LAH	LAHSO
BED	MIN	TAKEOFF MINIMUMS
BED	MIN	ALTERNATE MINIMUMS
BED	STAR	ZELKA ONE (RNAV)
BED	STAR	GRAYM FOUR
BED	STAR	DREEM ONE (RNAV)
GDM	IAP	RNAV (GPS)-B
GDM	IAP	VOR-A

GDM	MIN	TAKEOFF MINIMUMS
PVD	APD	AIRPORT DIAGRAM
PVD	HOT	HOT SPOT
PVD	IAP	ILS OR LOC RWY 05
PVD	IAP	ILS OR LOC RWY 34
PVD	IAP	RNAV (GPS) RWY 34
PVD	IAP	RNAV (GPS) RWY 16
PVD	IAP	RNAV (GPS) Y RWY 23
PVD	IAP	RNAV (GPS) RWY 05
PVD	IAP	ILS RWY 05 (CAT II - III)
PVD	IAP	VOR/DME RWY 16
PVD	IAP	VOR/DME RWY 23
PVD	IAP	VOR/DME RWY 34
PVD	IAP	VOR RWY 05
PVD	IAP	VOR RWY 34
PVD	IAP	RNAV (RNP) Z RWY 23
PVD	IAP	ILS RWY 23 (SA CAT I - II)
PVD	IAP	ILS OR LOC RWY 23
PVD	MIN	TAKEOFF MINIMUMS
PVD	MIN	ALTERNATE MINIMUMS
PVD	STAR	JORDN TWO (RNAV)
PVD	STAR	WIPOR THREE (RNAV)
BOS	APD	AIRPORT DIAGRAM
BOS	DP	LOGAN ONE CONT.2
BOS	DP	WYLYY TWO (RNAV)
BOS	DP	SSOXS FOUR (RNAV) CONT.1
BOS	DP	SSOXS FOUR (RNAV)
BOS	DP	REVSS THREE (RNAV) CONT.1
BOS	DP	REVSS THREE (RNAV)
BOS	DP	BRUWN FOUR (RNAV) CONT.1
BOS	DP	BRUWN FOUR (RNAV)
BOS	DP	BLZZR THREE (RNAV) CONT.1
BOS	DP	BLZZR THREE (RNAV)
BOS	DP	HYLND FOUR (RNAV)
BOS	DP	HYLND FOUR (RNAV) CONT.1
BOS	DP	LBSTA FOUR (RNAV)
BOS	DP	LBSTA FOUR (RNAV) CONT.1
BOS	DP	LOGAN ONE CONT.1
BOS	DP	PATSS FOUR (RNAV)
BOS	DP	PATSS FOUR (RNAV) CONT.1
BOS	DP	CELTK FOUR (RNAV)
BOS	DP	LOGAN ONE
BOS	DP	CELTK FOUR (RNAV) CONT.1
BOS	HOT	HOT SPOT
BOS	IAP	ILS RWY 33L (CAT II - III)
BOS	IAP	LIGHT VISUAL RWY 33L
BOS	IAP	VOR/DME-A
BOS	IAP	RNAV (GPS) RWY 33L
BOS	IAP	RNAV (GPS) RWY 32
BOS	IAP	RNAV (GPS) RWY 27

BOS	IAP	RNAV (GPS) RWY 22L
BOS	IAP	RNAV (GPS) RWY 15R
BOS	IAP	RNAV (GPS) RWY 04L
BOS	IAP	ILS OR LOC RWY 22L
BOS	IAP	ILS RWY 04R (CAT II - III)
BOS	IAP	ILS RWY 33L (SA CAT I)
BOS	IAP	ILS RWY 04R (SA CAT I)
BOS	IAP	ILS OR LOC/DME RWY 15R
BOS	IAP	ILS OR LOC RWY 33L
BOS	IAP	ILS OR LOC RWY 27
BOS	IAP	ILS OR LOC RWY 04R
BOS	IAP	RNAV (GPS) RWY 04R
BOS	LAH	LAHSO
BOS	MIN	ALTERNATE MINIMUMS
BOS	MIN	DIVERSE VECTOR AREA
BOS	MIN	TAKEOFF MINIMUMS
BOS	STAR	JFUND ONE (RNAV)
BOS	STAR	ROBUC TWO (RNAV) CONT.2
BOS	STAR	ROBUC TWO (RNAV) CONT.1
BOS	STAR	ROBUC TWO (RNAV)
BOS	STAR	OOSHN FOUR (RNAV) CONT.1
BOS	STAR	OOSHN FOUR (RNAV)
BOS	STAR	NORWICH SEVEN
BOS	STAR	JFUND ONE (RNAV) CONT.2
BOS	STAR	WOONS TWO
BOS	STAR	JFUND ONE (RNAV) CONT.1
BOS	STAR	GARDNER FOUR
IJD	IAP	VOR-A
IJD	IAP	RNAV (GPS) RWY 27
IJD	IAP	RNAV (GPS) RWY 09
IJD	MIN	ALTERNATE MINIMUMS
IJD	MIN	TAKEOFF MINIMUMS
ORE	IAP	RNAV (GPS) RWY 32
ORE	IAP	VOR-A
ORE	MIN	ALTERNATE MINIMUMS
ORE	MIN	TAKEOFF MINIMUMS
TAN	IAP	NDB RWY 30
TAN	IAP	RNAV (GPS) RWY 30
TAN	MIN	ALTERNATE MINIMUMS
TAN	MIN	TAKEOFF MINIMUMS
CEF	APD	AIRPORT DIAGRAM
CEF	IAP	ILS OR LOC RWY 05
CEF	IAP	ILS OR LOC RWY 23
CEF	IAP	TACAN OR VOR RWY 05
CEF	IAP	TACAN RWY 23
CEF	MIN	TAKEOFF MINIMUMS
CEF	STAR	STELA ONE
CEF	STAR	DEER PARK THREE

CEF	STAR	STELA ONE CONT.1
OQU	APD	AIRPORT DIAGRAM
OQU	IAP	ILS OR LOC RWY 16
OQU	IAP	RNAV (GPS) RWY 16
OQU	IAP	VOR-A
OQU	IAP	VOR RWY 34
OQU	IAP	RNAV (GPS) RWY 34
OQU	MIN	ALTERNATE MINIMUMS
OQU	MIN	TAKEOFF MINIMUMS
OQU	STAR	WIPOR THREE (RNAV)
ASH	APD	AIRPORT DIAGRAM
ASH	IAP	RNAV (GPS) RWY 14
ASH	IAP	ILS OR LOC RWY 14
ASH	IAP	RNAV (GPS) RWY 32
ASH	IAP	VOR RWY 32
ASH	IAP	VOR-A
ASH	MIN	TAKEOFF MINIMUMS
ASH	MIN	ALTERNATE MINIMUMS
AFN	IAP	VOR-A
AFN	IAP	RNAV (GPS)-C
AFN	IAP	RNAV (GPS)-B
AFN	MIN	TAKEOFF MINIMUMS

```
*********************************************************
*        VFR  -  TRAFFIC PATTERN AIRSPACE ANALYSIS      *
*********************************************************
```

Airspace User: Your Name

FILE: 4WL0968A

LATITUDE: 42°-10'-34.31" LONGITUDE: 71°-42'-13.67"

SITE ELEVATION AMSL.....415 ft.
STRUCTURE HEIGHT..... 70 ft.
OVERALL HEIGHT AMSL.....485 ft.

Traffic Pattern Airspace, a structure that exceed any of the following maximum allowable heights is considered to constitute a hazard to air navigation:

(1) The height of the transition surface (other than abeam the runway), the approach slope, the horizontal surface, and the conical surface (as applied to visual approach runways).

(2) Beyond the lateral limits of the conical surface and in the climb/descent area - 350' above airport elevation or the height of part 77.17(a)(2), whichever is greater not to exceed 500' above ground level (AGL). The climb/descent area begins abeam the runway threshold being used and is the area where the pilot is either descending to land on the runway or climbing to pattern altitude after departure.

(3) Beyond the lateral limits of the conical surface and NOT in the climb/descent area of any runway - 500' above Airport Elevation not to exceed 500' AGL.

********** Landing Facility Identifier **********
ORH

FAR 77.17(a)(1): DNE - Maximum Height Less Than 499 feet AGL
FAR 77.17(a)(2): DNE - Greater Than 5.99 NM.
Does Not Exceed VFR Horizontal Surface.
Does Not Exceed VFR Conical Surface.

Existing
Runway 11/29 Does Not Exceed Runway VFR Approach Runway
Does Not Exceed Runway VFR Transitional Surface.
Does Not Exceed Runway VFR Primary Surface.

Existing
Runway 15/33 Does Not Exceed Runway VFR Approach Runway
Does Not Exceed Runway VFR Transitional Surface.
Does Not Exceed Runway VFR Primary Surface.

********** Landing Facility Identifier **********

1B6

FAR 77.17(a)(1): DNE - Maximum Height Less Than 499 feet AGL
FAR 77.17(a)(2): Does Not Apply.
Does Not Exceed VFR Horizontal Surface.
Does Not Exceed VFR Conical Surface.

Existing
Runway 18/36 Does Not Exceed Runway VFR Approach Runway
Does Not Exceed Runway VFR Transitional Surface.
Does Not Exceed Runway VFR Primary Surface.

********** Landing Facility Identifier **********
9B1

FAR 77.17(a)(1): DNE - Maximum Height Less Than 499 feet AGL
FAR 77.17(a)(2): Does Not Apply.
Does Not Exceed VFR Horizontal Surface.
Does Not Exceed VFR Conical Surface.

Existing
Runway 14/32 Does Not Exceed Runway VFR Approach Runway
Does Not Exceed Runway VFR Transitional Surface.
Does Not Exceed Runway VFR Primary Surface.

********** Landing Facility Identifier **********
60M

FAR 77.17(a)(1): DNE - Maximum Height Less Than 499 feet AGL
FAR 77.17(a)(2): Does Not Apply.
Does Not Exceed VFR Horizontal Surface.
Does Not Exceed VFR Conical Surface.

Existing
Runway 01/19 Does Not Exceed Runway VFR Approach Runway
Does Not Exceed Runway VFR Transitional Surface.
Does Not Exceed Runway VFR Primary Surface.

********** Landing Facility Identifier **********
3B3

FAR 77.17(a)(1): DNE - Maximum Height Less Than 499 feet AGL
FAR 77.17(a)(2): Does Not Apply.
Does Not Exceed VFR Horizontal Surface.
Does Not Exceed VFR Conical Surface.

Existing
Runway 16/34 Does Not Exceed Runway VFR Approach Runway
Does Not Exceed Runway VFR Transitional Surface.
Does Not Exceed Runway VFR Primary Surface.

********** Landing Facility Identifier **********

3B0

FAR 77.17(a)(1): DNE - Maximum Height Less Than 499 feet AGL
FAR 77.17(a)(2): DNE - Greater Than 5.99 NM.
Does Not Exceed VFR Horizontal Surface.
Does Not Exceed VFR Conical Surface.

Existing
Runway 02/20 Does Not Exceed Runway VFR Approach Runway
Does Not Exceed Runway VFR Transitional Surface.
Does Not Exceed Runway VFR Primary Surface.

Existing
Runway 10/28 Does Not Exceed Runway VFR Approach Runway
Does Not Exceed Runway VFR Transitional Surface.
Does Not Exceed Runway VFR Primary Surface.

********** Landing Facility Identifier **********
SFZ

FAR 77.17(a)(1): DNE - Maximum Height Less Than 499 feet AGL
FAR 77.17(a)(2): DNE - Greater Than 5.99 NM.
Does Not Exceed VFR Horizontal Surface.
Does Not Exceed VFR Conical Surface.

Existing
Runway 05/23 Does Not Exceed Runway VFR Approach Runway
Does Not Exceed Runway VFR Transitional Surface.
Does Not Exceed Runway VFR Primary Surface.

Existing
Runway 15/33 Does Not Exceed Runway VFR Approach Runway
Does Not Exceed Runway VFR Transitional Surface.
Does Not Exceed Runway VFR Primary Surface.

********** Landing Facility Identifier **********
6B6

FAR 77.17(a)(1): DNE - Maximum Height Less Than 499 feet AGL
FAR 77.17(a)(2): Does Not Apply.
Does Not Exceed VFR Horizontal Surface.
Does Not Exceed VFR Conical Surface.

Existing
Runway 03/21 Does Not Exceed Runway VFR Approach Runway
Does Not Exceed Runway VFR Transitional Surface.
Does Not Exceed Runway VFR Primary Surface.

Existing
Runway 12/30 Does Not Exceed Runway VFR Approach Runway
Does Not Exceed Runway VFR Transitional Surface.
Does Not Exceed Runway VFR Primary Surface.

********** Landing Facility Identifier **********
C44

FAR 77.17(a)(1): DNE - Maximum Height Less Than 499 feet AGL
FAR 77.17(a)(2): Does Not Apply.
Does Not Exceed VFR Horizontal Surface.
Does Not Exceed VFR Conical Surface.

Existing
Runway 17/35 Does Not Exceed Runway VFR Approach Runway
Does Not Exceed Runway VFR Transitional Surface.
Does Not Exceed Runway VFR Primary Surface.

********** Landing Facility Identifier **********
8B5

FAR 77.17(a)(1): DNE - Maximum Height Less Than 499 feet AGL
FAR 77.17(a)(2): Does Not Apply.
Does Not Exceed VFR Horizontal Surface.
Does Not Exceed VFR Conical Surface.

Existing
Runway 06/24 Does Not Exceed Runway VFR Approach Runway
Does Not Exceed Runway VFR Transitional Surface.
Does Not Exceed Runway VFR Primary Surface.

********** Landing Facility Identifier **********
FIT

FAR 77.17(a)(1): DNE - Maximum Height Less Than 499 feet AGL
FAR 77.17(a)(2): DNE - Greater Than 5.99 NM.
Does Not Exceed VFR Horizontal Surface.
Does Not Exceed VFR Conical Surface.

Existing
Runway 02/20 Does Not Exceed Runway VFR Approach Runway
Does Not Exceed Runway VFR Transitional Surface.
Does Not Exceed Runway VFR Primary Surface.

Existing
Runway 14/32 Does Not Exceed Runway VFR Approach Runway
Does Not Exceed Runway VFR Transitional Surface.
Does Not Exceed Runway VFR Primary Surface.

Proposed
Runway 16/34 Does Not Exceed Runway VFR Approach Runway
Does Not Exceed Runway VFR Transitional Surface.
Does Not Exceed Runway VFR Primary Surface.

********** Landing Facility Identifier **********
LZD

FAR 77.17(a)(1): DNE - Maximum Height Less Than 499 feet AGL
FAR 77.17(a)(2): Does Not Apply.
Does Not Exceed VFR Horizontal Surface.
Does Not Exceed VFR Conical Surface.

Existing
Runway 13/31 Does Not Exceed Runway VFR Approach Runway
Does Not Exceed Runway VFR Transitional Surface.
Does Not Exceed Runway VFR Primary Surface.

********** Landing Facility Identifier **********
OWD

FAR 77.17(a)(1): DNE - Maximum Height Less Than 499 feet AGL
FAR 77.17(a)(2): DNE - Greater Than 5.99 NM.
Does Not Exceed VFR Horizontal Surface.
Does Not Exceed VFR Conical Surface.

Existing
Runway 10/28 Does Not Exceed Runway VFR Approach Runway
Does Not Exceed Runway VFR Transitional Surface.
Does Not Exceed Runway VFR Primary Surface.

Existing
Runway 17/35 Does Not Exceed Runway VFR Approach Runway
Does Not Exceed Runway VFR Transitional Surface.
Does Not Exceed Runway VFR Primary Surface.

********** Landing Facility Identifier **********
1B9

FAR 77.17(a)(1): DNE - Maximum Height Less Than 499 feet AGL
FAR 77.17(a)(2): DNE - Greater Than 5.99 NM.
Does Not Exceed VFR Horizontal Surface.
Does Not Exceed VFR Conical Surface.

Existing
Runway 04/22 Does Not Exceed Runway VFR Approach Runway
Does Not Exceed Runway VFR Transitional Surface.
Does Not Exceed Runway VFR Primary Surface.

Existing
Runway 14/32 Does Not Exceed Runway VFR Approach Runway
Does Not Exceed Runway VFR Transitional Surface.
Does Not Exceed Runway VFR Primary Surface.

Proposed
Runway 04/22 Does Not Exceed Runway VFR Approach Runway
Does Not Exceed Runway VFR Transitional Surface.
Does Not Exceed Runway VFR Primary Surface.

********** Landing Facility Identifier **********
BED

FAR 77.17(a)(1): DNE - Maximum Height Less Than 499 feet AGL
FAR 77.17(a)(2): DNE - Greater Than 5.99 NM.
Does Not Exceed VFR Horizontal Surface.
Does Not Exceed VFR Conical Surface.

Existing
Runway 05/23 Does Not Exceed Runway VFR Approach Runway
Does Not Exceed Runway VFR Transitional Surface.
Does Not Exceed Runway VFR Primary Surface.

Existing
Runway 11/29 Does Not Exceed Runway VFR Approach Runway
Does Not Exceed Runway VFR Transitional Surface.
Does Not Exceed Runway VFR Primary Surface.

********** Landing Facility Identifier **********
GDM

FAR 77.17(a)(1): DNE - Maximum Height Less Than 499 feet AGL
FAR 77.17(a)(2): Does Not Apply.
Does Not Exceed VFR Horizontal Surface.
Does Not Exceed VFR Conical Surface.

Existing
Runway 18/36 Does Not Exceed Runway VFR Approach Runway
Does Not Exceed Runway VFR Transitional Surface.
Does Not Exceed Runway VFR Primary Surface.

********** Landing Facility Identifier **********
PVD

FAR 77.17(a)(1): DNE - Maximum Height Less Than 499 feet AGL
FAR 77.17(a)(2): DNE - Greater Than 5.99 NM.
Does Not Exceed VFR Horizontal Surface.
Does Not Exceed VFR Conical Surface.

Existing
Runway 05/23 Does Not Exceed Runway VFR Approach Runway
Does Not Exceed Runway VFR Transitional Surface.
Does Not Exceed Runway VFR Primary Surface.

Existing
Runway 16/34 Does Not Exceed Runway VFR Approach Runway
Does Not Exceed Runway VFR Transitional Surface.
Does Not Exceed Runway VFR Primary Surface.

********** Landing Facility Identifier **********
BOS

FAR 77.17(a)(1): DNE - Maximum Height Less Than 499 feet AGL
FAR 77.17(a)(2): DNE - Greater Than 5.99 NM.
Does Not Exceed VFR Horizontal Surface.
Does Not Exceed VFR Conical Surface.

Existing
Runway 04L/22R Does Not Exceed Runway VFR Approach Runway
Does Not Exceed Runway VFR Transitional Surface.
Does Not Exceed Runway VFR Primary Surface.

Existing
Runway 04R/22L Does Not Exceed Runway VFR Approach Runway
Does Not Exceed Runway VFR Transitional Surface.
Does Not Exceed Runway VFR Primary Surface.

Existing
Runway 09/27 Does Not Exceed Runway VFR Approach Runway
Does Not Exceed Runway VFR Transitional Surface.
Does Not Exceed Runway VFR Primary Surface.

Existing
Runway 14/32 Does Not Exceed Runway VFR Approach Runway
Does Not Exceed Runway VFR Transitional Surface.
Does Not Exceed Runway VFR Primary Surface.

Existing
Runway 15L/33R Does Not Exceed Runway VFR Approach Runway
Does Not Exceed Runway VFR Transitional Surface.
Does Not Exceed Runway VFR Primary Surface.

Existing
Runway 15R/33L Does Not Exceed Runway VFR Approach Runway
Does Not Exceed Runway VFR Transitional Surface.
Does Not Exceed Runway VFR Primary Surface.

Proposed
Runway 14/32 Does Not Exceed Runway VFR Approach Runway
Does Not Exceed Runway VFR Transitional Surface.
Does Not Exceed Runway VFR Primary Surface.

********** Landing Facility Identifier **********
IJD

FAR 77.17(a)(1): DNE - Maximum Height Less Than 499 feet AGL
FAR 77.17(a)(2): DNE - Greater Than 5.99 NM.
Does Not Exceed VFR Horizontal Surface.
Does Not Exceed VFR Conical Surface.

Existing
Runway 09/27 Does Not Exceed Runway VFR Approach Runway
Does Not Exceed Runway VFR Transitional Surface.
Does Not Exceed Runway VFR Primary Surface.

Existing
Runway 18/36 Does Not Exceed Runway VFR Approach Runway
Does Not Exceed Runway VFR Transitional Surface.
Does Not Exceed Runway VFR Primary Surface.

********** Landing Facility Identifier **********
ORE

FAR 77.17(a)(1): DNE - Maximum Height Less Than 499 feet AGL
FAR 77.17(a)(2): DNE - Greater Than 5.99 NM.
Does Not Exceed VFR Horizontal Surface.
Does Not Exceed VFR Conical Surface.

Existing
Runway 01/19 Does Not Exceed Runway VFR Approach Runway
Does Not Exceed Runway VFR Transitional Surface.
Does Not Exceed Runway VFR Primary Surface.

Existing
Runway 14/32 Does Not Exceed Runway VFR Approach Runway
Does Not Exceed Runway VFR Transitional Surface.
Does Not Exceed Runway VFR Primary Surface.

Proposed
Runway 14/32 Does Not Exceed Runway VFR Approach Runway
Does Not Exceed Runway VFR Transitional Surface.
Does Not Exceed Runway VFR Primary Surface.

Proposed
Runway 01/19 Does Not Exceed Runway VFR Approach Runway
Does Not Exceed Runway VFR Transitional Surface.
Does Not Exceed Runway VFR Primary Surface.

********** Landing Facility Identifier **********
TAN

FAR 77.17(a)(1): DNE - Maximum Height Less Than 499 feet AGL
FAR 77.17(a)(2): DNE - Greater Than 5.99 NM.
Does Not Exceed VFR Horizontal Surface.
Does Not Exceed VFR Conical Surface.

Existing
Runway 04/22 Does Not Exceed Runway VFR Approach Runway
Does Not Exceed Runway VFR Transitional Surface.
Does Not Exceed Runway VFR Primary Surface.

Existing
Runway 12/30 Does Not Exceed Runway VFR Approach Runway
Does Not Exceed Runway VFR Transitional Surface.
Does Not Exceed Runway VFR Primary Surface.

********** Landing Facility Identifier **********
1M8

FAR 77.17(a)(1): DNE - Maximum Height Less Than 499 feet AGL
FAR 77.17(a)(2): Does Not Apply.
Does Not Exceed VFR Horizontal Surface.
Does Not Exceed VFR Conical Surface.

Existing
Runway 09/27 Does Not Exceed Runway VFR Approach Runway
Does Not Exceed Runway VFR Transitional Surface.
Does Not Exceed Runway VFR Primary Surface.

********** Landing Facility Identifier **********
7B9

FAR 77.17(a)(1): DNE - Maximum Height Less Than 499 feet AGL
FAR 77.17(a)(2): Does Not Apply.
Does Not Exceed VFR Horizontal Surface.
Does Not Exceed VFR Conical Surface.

Existing
Runway 01/19 Does Not Exceed Runway VFR Approach Runway
Does Not Exceed Runway VFR Transitional Surface.
Does Not Exceed Runway VFR Primary Surface.

********** Landing Facility Identifier **********
CEF

FAR 77.17(a)(1): DNE - Maximum Height Less Than 499 feet AGL
FAR 77.17(a)(2): DNE - Greater Than 5.99 NM.
Does Not Exceed VFR Horizontal Surface.
Does Not Exceed VFR Conical Surface.

Existing
Runway 05/23 Does Not Exceed Runway VFR Approach Runway
Does Not Exceed Runway VFR Transitional Surface.
Does Not Exceed Runway VFR Primary Surface.

Existing
Runway 15/33 Does Not Exceed Runway VFR Approach Runway
Does Not Exceed Runway VFR Transitional Surface.
Does Not Exceed Runway VFR Primary Surface.

********** Landing Facility Identifier **********
OQU

FAR 77.17(a)(1): DNE - Maximum Height Less Than 499 feet AGL
FAR 77.17(a)(2): DNE - Greater Than 5.99 NM.
Does Not Exceed VFR Horizontal Surface.
Does Not Exceed VFR Conical Surface.

Existing
Runway 05/23 Does Not Exceed Runway VFR Approach Runway
Does Not Exceed Runway VFR Transitional Surface.
Does Not Exceed Runway VFR Primary Surface.

Existing
Runway 16/34 Does Not Exceed Runway VFR Approach Runway
Does Not Exceed Runway VFR Transitional Surface.
Does Not Exceed Runway VFR Primary Surface.

********** Landing Facility Identifier **********
ASH

FAR 77.17(a)(1): DNE - Maximum Height Less Than 499 feet AGL
FAR 77.17(a)(2): DNE - Greater Than 5.99 NM.
Does Not Exceed VFR Horizontal Surface.
Does Not Exceed VFR Conical Surface.

Existing
Runway 14/32 Does Not Exceed Runway VFR Approach Runway
Does Not Exceed Runway VFR Transitional Surface.
Does Not Exceed Runway VFR Primary Surface.

Proposed
Runway 14/32 Does Not Exceed Runway VFR Approach Runway
Does Not Exceed Runway VFR Transitional Surface.
Does Not Exceed Runway VFR Primary Surface.

********** Landing Facility Identifier **********
28M

FAR 77.17(a)(1): DNE - Maximum Height Less Than 499 feet AGL
FAR 77.17(a)(2): Does Not Apply.
Does Not Exceed VFR Horizontal Surface.
Does Not Exceed VFR Conical Surface.

Existing
Runway 18/36 Does Not Exceed Runway VFR Approach Runway
Does Not Exceed Runway VFR Transitional Surface.
Does Not Exceed Runway VFR Primary Surface.

********** Landing Facility Identifier **********
MA6

FAR 77.17(a)(1): DNE - Maximum Height Less Than 499 feet AGL
FAR 77.17(a)(2): DNE - Greater Than 5.99 NM.
Does Not Exceed VFR Horizontal Surface.
Does Not Exceed VFR Conical Surface.

Existing
Runway 10/28 Does Not Exceed Runway VFR Approach Runway
Does Not Exceed Runway VFR Transitional Surface.

```
                    Does Not Exceed Runway VFR Primary Surface.

    Existing
    Runway 17/35    Does Not Exceed Runway VFR Approach Runway
                    Does Not Exceed Runway VFR Transitional Surface.
                    Does Not Exceed Runway VFR Primary Surface.

************************  Landing Facility Identifier  ************************
                                      AFN

FAR 77.17(a)(1): DNE - Maximum Height Less Than 499 feet AGL
FAR 77.17(a)(2): Does Not Apply.
Does Not Exceed VFR Horizontal Surface.
Does Not Exceed VFR Conical Surface.

    Existing
    Runway 16/34    Does Not Exceed Runway VFR Approach Runway
                    Does Not Exceed Runway VFR Transitional Surface.
                    Does Not Exceed Runway VFR Primary Surface.

*******************************************************************************
*   The above analysis was conducted using default parameters - Category C    *
*   aircraft and a maximum of 4 like category aircraft in the VFR -Traffic    *
*   Pattern at one time.                                                      *
*                                                                             *
*   To view a graphical image of VFR - Traffic Pattern Airspace for these     *
*   airports use Terps® Professional Software. Open the airport and Aispace®  *
*   study. From the Map Menu select 'VFR - Traffic Pattern Airspace'. The     *
*   proposed structure, airport, and the traffic pattern will now be shown    *
*   together. Use this information to locate an alternate site if necessary.  *
*******************************************************************************
```

Airspace® Version 17.11.484
Copyright © 1989 - 2017 Federal Airways & Airspace® all rights reserved

Date: 01-08-2018
Time: 15:39:19

```
*******************************************************
*   PRIVATE LANDING FACILITIES IN PROXIMITY OF CASE   *
*******************************************************
```

Airspace User: Your Name

FILE: 4WL0968A

LATITUDE: 42°-10'-34.31" LONGITUDE: 71°-42'-13.67"

SITE ELEVATION AMSL.....415 ft.
STRUCTURE HEIGHT..... 70 ft.
OVERALL HEIGHT AMSL.....485 ft.

FACIL IDENT	TYP	NAME	BEARING To FACIL	RANGE IN NM	DELTA ARP ELEVATION	FAR P77	FAA PROTECTED IFR PROCEDURE
4MA3	HEL	MILLBURY SAVINGS/WEST	287.6	3.07	+92	NO	
MA97	AIR	WATERS	207.56	3.46	-215	NO	
6MA7	HEL	QUANTUM (SHREWSBURY)	4.97	5.81	-60	NO	
MA32	HEL	ATLANTIC TRADE	330.14	5.87	-85	NO	
1MA2	HEL	UMASS MEMORIAL MEDICAL CENTE	337.1	6.43	+68	NO	
42MA	HEL	WORCESTER MEDICAL CENTER	322.35	6.83	+16	NO	
MA41	HEL	PRINCESS LANE	65.71	7.05	+350	NO	
MA94	HEL	PARKER	324.61	7.29	-35	NO	
1MA5	AIR	UNKNOWN FIELD	48.42	9.29	+53	NO	
MA46	HEL	ARMY NATIONAL GUARD	105.68	10.18	+185	NO	
MA50	HEL	COMPAQ MARLBORO	32.28	10.64	+55	NO	
MA83	HEL	HUBBARD RGNL HOSPITAL	216.68	11.13	-25	NO	
MA09	HEL	MOJARR	227.73	11.24	+27	NO	
12MA	HEL	MELLEN STREET	80.91	11.79	+210	NO	
MA19	AIR	BERLIN LNDG AREA	13.54	11.8	+215	NO	
25MA	HEL	HIGH SCHOOL	81.36	11.84	+220	NO	
MA16	AIR	MARSHALL'S	334.97	12.39	-145	NO	
MA30	AIR	DRESSER HILL	248.59	12.57	-325	NO	
3MA1	HEL	MARLBOROUGH HOSPITAL	31.43	12.67	-35	NO	
RI26	HEL	LANDMARK MEDICAL CENTER	138.05	13.93	+283	NO	
58MA	HEL	BOSTON SCIENTIFIC MARLBORO	37.91	14.11	+95	NO	
MA71	HEL	DAVNA CORP	95.23	14.23	+340	NO	
6MA1	HEL	NASON HILL	82.9	14.6	+303	NO	
30MA	HEL	CLINTON HOSPITAL	1.86	15.11	+117	NO	
5MA5	HEL	SOUTHEND FARM	86.83	15.53	+295	NO	
4MA0	HEL	BURKE	77.18	15.73	+245	NO	
2MA2	HEL	DIGITAL	55.42	15.91	+35	NO	
MA70	AIR	SUDBURY	49.29	16.09	+350	NO	
MA57	HEL	US PROPERTY & FISCAL OFFICE	66.77	16.37	+285	NO	
5MA7	HEL	COCHITUATE	60.99	16.4	+275	NO	
2MA8	HEL	COMPAQ STOW	25.24	16.89	+235	NO	
8MA4	AIR	CROW ISLAND	32.75	17.2	+300	NO	
CT13	AIR	YANKEE AIRSTRIP	195.92	18.27	-235	NO	
MA73	HEL	OXBOW CORPORATION	81.98	18.31	+215	NO	

2MA5	HEL	COMPAQ POWDERMILL ROAD	35.93	18.65	+310	NO
RI02	HEL	GRAYROCK RIDGE	136.62	18.74	+171	NO
RI28	SEA	PLOUFFE LANDING	164.33	18.75	+157	NO
MA52	AIR	SIDS	33.46	18.84	+265	NO
64CT	AIR	WOODSTOCK	215.98	18.91	+20	NO
5MA3	AIR	PASPORT	272.13	19.61	-525	NO
17MA	HEL	LONG HILL	350.47	19.98	-145	NO
7MA1	HEL	DIGITAL (BOX 2)	20.49	20.31	+220	NO
MA89	AIR	B&B FARM	299.89	20.53	-495	NO
2MA7	SEA	FALLS POND	127.89	21.34	+310	NO
0MA9	HEL	LLEIA KYLE O'MEARA	335.17	21.61	-745	NO
31CT	HEL	QUIET CORNER	207.44	21.74	+217	NO
7MA0	HEL	DIGITAL (BOXBORO)	27.43	21.8	+275	NO
0MA2	HEL	HEALTHALLIANCE HOSPITAL-LEOM	353.43	22.00	+35	NO
20MA	HEL	WCVB-TV	69.97	22.58	+328	NO
1MA8	HEL	HORIZON HILL	50.08	22.85	+149	NO
MA76	HEL	WALTHAM WESTON HOSPITAL & ME	60.37	23.32	+410	NO
24MA	HEL	BARRE-BASSETT	311.81	23.42	-415	NO
MA53	AIR	WARE	285.73	23.64	+2	NO
MA92	HEL	PROSPECT HILL	56.07	23.9	+215	NO
5CT6	AIR	BUELL FARM	230.14	24.09	-185	NO
2MA4	HEL	COMPAQ LITTLETON	24.62	24.62	+185	NO
1MA1	HEL	NASHOBA VALLEY MEDICAL CENTE	13.48	24.7	+177	NO
MA81	HEL	DIGITAL	336.61	24.77	-615	NO
MA38	HEL	FITCHBURG PAPER COMPANY	347.13	24.83	-40	NO
MA26	BAL	BALLOON PORT AT DINGLEY DELL	262.07	24.88	+20	NO
MA40	SEA	DIESEL DOGS	331.97	24.97	+160	NO
MA48	HEL	RAYTHEON	52.64	25.23	+355	NO
CT74	AIR	WESTFORD AIRSTRIP	237.47	25.27	-415	NO
5MA0	HEL	FEDERAL CENTER	58.53	25.42	+265	NO
RI25	HEL	RHODE ISLAND HOSPITAL	149.13	25.59	+414	NO
23MA	HEL	WESTFORD REGENCY	27.48	26.18	+230	NO
CT10	HEL	FLAT ROCK FARM	190.57	26.45	-165	NO
13MA	AIR	METROPOLITAN	276.16	27.24	+67	NO
10MA	SEA	BEAVER LAKE	281.1	27.38	+101	NO
32NY	HEL	S J M LANDING	303.83	27.43	+105	NO
0MA6	HEL	WBZ	65.82	27.86	+476	NO
MA27	HEL	GODDARD HOSP	99.6	28.11	+285	NO
36MA	HEL	BETH ISRAEL DEACONESS MEDICA	69.68	28.22	+324	YES IFR Procedure
MA39	HEL	BRIGHAM & WOMEN'S HOSPITAL	69.99	28.31	+288	YES IFR Procedure
MA93	HEL	BAY BANK II	50.1	28.61	+337	NO
MA21	HEL	BAYBANK	50.21	28.68	+335	NO
RI11	AIR	RICONN	187.06	28.98	+100	NO
85MA	HEL	LAHEY CLINIC	50.2	29.01	+244	NO
0MA4	HEL	BOSTON MEDICAL CENTER HOSPIT	71.23	29.72	+470	YES IFR Procedure
0MA5	HEL	BROCKTON USAR CENTER	104.23	29.82	+400	NO
RI01	HEL	KENT COUNTY MEMORIAL HOSPITA	160.26	29.9	+381	NO
MA10	HEL	CHAMBERS	65.93	29.96	+425	NO
MA22	HEL	BOSTON GLOBE	73.48	30.32	+430	NO
MA66	HEL	TUFTS MEDICAL CENTER	69.83	30.36	+255	YES IFR Procedure
4MA8	HEL	PG	77.85	30.37	+475	NO
0MA1	HEL	MASSACHUSETTS GENERAL HOSPIT	68.1	30.42	+290	YES IFR Procedure

1MA4	HEL	WANG	33.07	31.03	+381	NO
06MA	HEL	THE BARN	7.75	31.14	+275	NO
0MA3	HEL	REH	137.97	31.46	+385	NO
1MA9	HEL	MORTON HOSPITAL	120.99	31.68	+435	NO
31MA	AIR	NORM'S FIELD	279.53	31.84	+6	NO
26MA	AIR	PEPPERELL	12.31	31.92	+309	NO
MA59	HEL	VERACKA	104.47	32.00	+405	NO
MA87	SEA	CAPE AIR SEAPLANES ON BOSTON	70.48	32.00	+485	NO
MA69	HEL	NEW ENGLAND MEMORIAL HOSPITA	58.69	32.01	+266	NO
MA17	SEA	TAILWIND BOSTON	70.58	32.02	+485	NO
3MA0	HEL	COMPAQ WOBURN	51.42	32.21	+405	NO
37MA	HEL	HANSON	264.06	32.29	+85	NO
40MA	HEL	LOWELL GENERAL HOSPITAL	29.42	32.55	+342	NO
MA99	HEL	PRINCESS HOUSE	125.53	32.67	+473	NO
MA54	HEL	B-TOWN	283.23	33.04	+165	NO
NH17	AIR	ZIM	358.95	33.07	-75	NO
4MA7	HEL	AHEARN	271.82	33.3	+205	NO
NH76	AIR	MASON AIRFIELD	353.88	33.34	-255	NO
MA74	SEA	LARSON'S	22.24	33.41	+395	NO
80MA	HEL	TEW MAC	41.11	33.62	+393	NO
15NH	HEL	NASHUA TECHNOLOGY PARK	18.78	33.73	+250	NO
27MA	SEA	WAMSETTO	129.18	33.9	+485	NO
NH16	AIR	BROOKLINE	359.72	33.92	+70	NO
CT69	HEL	NASIN	218.76	34.76	+243	NO
36NH	HEL	LONG POND LANDING	25.05	34.77	+300	NO
2MA9	HEL	DIGITAL	37.34	35.00	+355	NO
NH42	HEL	C S S	16.3	35.04	+273	NO
MA96	HEL	RENT-A-TOOL	64.53	35.41	+485	NO
01MA	HEL	COMPAQ ANDOVER	40.68	35.59	+345	NO
CT53	HEL	MOUNTAIN VIEW	254.61	36.08	+195	NO
0CT2	HEL	WINDHAM HOSPITAL	220.11	36.13	+155	NO
NH37	HEL	SOUTHERN NH MEDICAL CENTER	17.11	36.37	+293	YES IFR Procedure
CT43	AIR	SPRUCE	196.18	36.39	+285	NO
02CT	HEL	STRANGERS POINT	244.83	36.51	-55	NO
3MA7	HEL	GEAR PLANT	63.01	36.8	+475	NO
1MA7	HEL	LONG HILL ORCHARD	60.84	36.86	+365	NO
CT15	AIR	WYSOCKI FIELD	247.92	37.25	+95	NO
NH66	HEL	TEMPLE	351.09	37.25	-435	NO
NH78	AIR	STECK FARM	23.34	37.33	+25	NO
MA31	HEL	CHARLTON MEMORIAL HOSPITAL	138.46	37.48	+245	NO
NH94	HEL	SPRING CREEK	1.2	37.89	+85	NO
CT09	AIR	HECKLER FIELD	233.73	38.06	-308	NO
MA47	HEL	CHICOPEE	270.85	38.26	+240	NO
34NH	HEL	STONE SONG	2.82	38.34	+125	NO
24CT	AIR	BEE FIELD	197.8	38.4	+205	NO
MA45	HEL	SIMMONS	94.86	38.54	+395	NO
CT27	HEL	TENNESSEE F	254.26	38.76	+308	NO
CT32	AIR	GALLUP FARM	188.62	38.88	+45	NO
NH80	HEL	SHANKLIN	357.58	39.00	-335	NO
MA60	HEL	ST LUKE'S HOSPITAL	115.89	39.14	+345	NO
NH93	HEL	SEAN	25.99	39.18	+335	NO
NH62	HEL	MILLIPORE	341.74	39.33	-647	NO

CT19	AIR	LAURIE FIELD	251.24	39.38	+356	NO
NH41	HEL	MERRIMACK	12.85	39.43	+276	NO
29MA	HEL	LAMINATED	272.47	39.92	+350	NO
03MA	AIR	HADLEY	289.28	39.95	+335	NO
NH03	HEL	GRANITE	21.81	39.95	+268	NO

THE NEAREST PRIVATE USE LANDING FACILITY IS: MILLBURY SAVINGS/WEST

MILLBURY SAVINGS/WEST is an Airport type landing facility.
Landing facilities with IFR procedures are protected under FAR 77.17(a)(3).

Airspace® Version 17.11.484

AIRSPACE® and TERPS® are registered ® trademarks of Federal Airways & Airspace®
Copyright © 1989 - 2017

01-08-2018
15:39:23

The mathematical algorithms used by this program are derived directly from
Federal Aviation Regulations Part 77, sub-part C.

```
*********************************************
*      F.A.R. 77  OBSTRUCTION ANALYSIS      *
*********************************************
```

Airspace User: Your Name

FILE: 4WL0968A

LATITUDE: 42°-10'-34.31" LONGITUDE: 71°-42'-13.67"

SITE ELEVATION AMSL.....415 ft.
STRUCTURE HEIGHT..... 70 ft.
OVERALL HEIGHT AMSL.....485 ft.

77.17(a)(1) A height more than 499 ft. Above Ground Level (AGL).

********** DOES NOT EXCEED **********

THE MAXIMUM ALLOWABLE HEIGHT IS:..... 914 ft. AMSL

THE GROUND ELEVATION AT THE SITE IS:... 415 ft. AMSL

THE OVERALL CASE ELEVATION IS:..... 485 ft. AMSL

THE CASE IS BELOW THE ALLOWABLE BY:.... 429 ft.

```
*********************************************
       BEGIN AIRPORT ANALYSIS FOR ORH
*********************************************
```

77.17(a)(2) A height AGL or airport elevation, whichever is higher.

********** DOES NOT EXCEED **********

BECAUSE: Location studied is further than 5.99 NM from ARP.

THE REFERENCE AIRPORT IDENT IS:..... ORH

THE AIRPORT ELEVATION IS:..... 1009 ft. AMSL

THE DISTANCE FROM THE CASE TO ARP IS:.. 9.4041 NAUTICAL MILES

THE BEARING AIRPORT TO CASE IS:..... 125.545 DEGREES

THE CASE HEIGHT AGL IS:..... 70 ft.

ALLOWABLE HEIGHT..... 1849 ft. AMSL

77.19 (a) A height exceeding a horizontal surface 150 ft. above airport elevation within a radius of >> ORH <<.

********** DOES NOT EXCEED **********

NOT WITHIN SPECIFIED HORIZONTAL SURFACE AREA

77.19(b) A height exceeding a conical surface (a slope outward 4000 ft. from the horizontal surface at 20/1 ratio).

********** DOES NOT EXCEED **********

NOT WITHIN SPECIFIED CONICAL SURFACE AREA

****
* BEGIN RUNWAY ANALYSIS *
****

EXISTING RUNWAY 11/29

77.19(c) A height exceeding runway primary surface.

********** DOES NOT EXCEED **********

NOT WITHIN SPECIFIED RUNWAY PRIMARY SURFACE

77.19(e) A height exceeding a transitional surface abeam runway.

********** DOES NOT EXCEED **********

NOT WITHIN SPECIFIED RUNWAY ABEAM TRANSITIONAL SURFACE

77.19(d) A height exceeding an approach surface of RUNWAY 29.

THE BEARING TO THE CASE FROM THE THRESHOLD IS..... 127.033 degrees

THE ABEAM BEARING TO THE CENTERLINE IS..... 183.85 degrees

THE CENTERLINE OUTBOUND TRUE BEARING IS..... 93.85 degrees

THE ABEAM DISTANCE TO CENTERLINE FROM CASE IS..... 29691.1 ft.

THE RUNWAY THRESHOLD ELEVATION IS..... 987.9 ft. AMSL

THE DISTANCE FROM THRESHOLD + 200' TO THE CASE IS... 54408.781 ft.

THE DISTANCE FROM THRESHOLD + 200' TO NB IS..... 45537.6 ft.

THE CRITICAL WIDTH OF HALF THE APPROACH IS..... 7330.633 ft.

********** DOES NOT EXCEED **********

BEYOND DEFINED APPROACH & TRANSITIONAL AREAS.

RUNWAY CENTERLINE OFFSET IS..... 29691.04 ft.

DISTANCE FROM THE THRESHOLD TO OFFSET IS..... 45737.55 ft.

THE SLOPE OF RUNWAY 29 IS: 50 TO 1.

The FAA has defined this runway as a non-utility runway. It has a precision approach. The obstacle surface extends 50,000 feet with a 50:1 Slope for the first 10,000 feet and a 40:1 Slope for 40,000 feet. The obstacle approach surface is centered symmetrically along the runway centerline extended. Please review the US Terminal Procedures volume associated with this airport. If a procedure for this airport and/or runway exist use Terps® Professional software to determine the height limits (if any) the procedure will have on the proposed structure. Precision instrument procedures will have the greatest impact between the final approach fix (FAF) and the runway end. The FAF is located approximately 5 NM from the runway end. This type of approach usually has a non-precision and a circling approach also. A circling approach to the airport or runway can extend out up to 4.5 NM from every runway end.

****
* BEGIN RUNWAY ANALYSIS *
****

EXISTING RUNWAY 15/33

77.19(c) A height exceeding runway primary surface.

********** DOES NOT EXCEED **********

NOT WITHIN SPECIFIED RUNWAY PRIMARY SURFACE

77.19(e) A height exceeding a transitional surface abeam runway.

********** DOES NOT EXCEED **********

NOT WITHIN SPECIFIED RUNWAY ABEAM TRANSITIONAL SURFACE

77.19(d) A height exceeding an approach surface of RUNWAY 33.

THE BEARING TO THE CASE FROM THE THRESHOLD IS..... 125.625 degrees

THE ABEAM BEARING TO THE CENTERLINE IS..... 227.75 degrees

THE CENTERLINE OUTBOUND TRUE BEARING IS..... 137.75 degrees

THE ABEAM DISTANCE TO CENTERLINE FROM CASE IS..... 11429.4 ft.

********** DOES NOT EXCEED **********

CASE MEETS ANGULAR CRITERIA BUT IS LOCATED
GREATER THAN 50,000 ft. FROM THE START OF
ANY APPROACH TYPE, OUT BY 2727.9 feet

****
BEGIN AIRPORT ANALYSIS FOR 1B6
****

77.17(a)(2) A height AGL or airport elevation, whichever is higher.

********** DOES NOT EXCEED **********

BECAUSE: Airport does not have a runway longer than 3200 feet.

THE REFERENCE AIRPORT IDENT IS:..... 1B6

THE AIRPORT ELEVATION IS:..... 269 ft. AMSL

THE DISTANCE FROM THE CASE TO ARP IS:.. 9.6106 NAUTICAL MILES

THE BEARING AIRPORT TO CASE IS:..... 295.891 DEGREES

THE CASE HEIGHT AGL IS:..... 70 ft.

ALLOWABLE HEIGHT..... 1276 ft. AMSL

77.19 (a) A height exceeding a horizontal surface 150 ft. above
airport elevation within a radius of >> 1B6 <<.

********** DOES NOT EXCEED **********

NOT WITHIN SPECIFIED HORIZONTAL SURFACE AREA

77.19(b) A height exceeding a conical surface (a slope outward 4000 ft.
from the horizontal surface at 20/1 ratio).

********** DOES NOT EXCEED **********

NOT WITHIN SPECIFIED CONICAL SURFACE AREA

****
* BEGIN RUNWAY ANALYSIS *
****

EXISTING RUNWAY 18/36

77.19(c) A height exceeding runway primary surface.

********** DOES NOT EXCEED **********

NOT WITHIN SPECIFIED RUNWAY PRIMARY SURFACE

77.19(e) A height exceeding a transitional surface abeam runway.

********** DOES NOT EXCEED **********

NOT WITHIN SPECIFIED RUNWAY ABEAM TRANSITIONAL SURFACE

77.19(d) A height exceeding an approach surface of RUNWAY 18.

THE BEARING TO THE CASE FROM THE THRESHOLD IS..... 294.492 degrees

********** DOES NOT EXCEED **********

OUTSIDE APPROACH ANGULAR CRITERIA FOR THIS RUNWAY.

****
BEGIN AIRPORT ANALYSIS FOR 9B1
****

77.17(a)(2) A height AGL or airport elevation, whichever is higher.

********** DOES NOT EXCEED **********

BECAUSE: Airport does not have a runway longer than 3200 feet.

THE REFERENCE AIRPORT IDENT IS:..... 9B1

THE AIRPORT ELEVATION IS:..... 285 ft. AMSL

THE DISTANCE FROM THE CASE TO ARP IS:.. 13.2501 NAUTICAL MILES

THE BEARING AIRPORT TO CASE IS:..... 220.884 DEGREES

THE CASE HEIGHT AGL IS:..... 70 ft.

ALLOWABLE HEIGHT..... 1640 ft. AMSL

77.19 (a) A height exceeding a horizontal surface 150 ft. above airport elevation within a radius of >> 9B1 <<.

********** DOES NOT EXCEED **********

NOT WITHIN SPECIFIED HORIZONTAL SURFACE AREA

77.19(b) A height exceeding a conical surface (a slope outward 4000 ft. from the horizontal surface at 20/1 ratio).

********** DOES NOT EXCEED **********

NOT WITHIN SPECIFIED CONICAL SURFACE AREA

****
* BEGIN RUNWAY ANALYSIS *
****

EXISTING RUNWAY 14/32

77.19(c) A height exceeding runway primary surface.

********** DOES NOT EXCEED **********

NOT WITHIN SPECIFIED RUNWAY PRIMARY SURFACE

77.19(e) A height exceeding a transitional surface abeam runway.

********** DOES NOT EXCEED **********

NOT WITHIN SPECIFIED RUNWAY ABEAM TRANSITIONAL SURFACE

77.19(d) A height exceeding an approach surface of RUNWAY 14.

THE BEARING TO THE CASE FROM THE THRESHOLD IS..... 220.128 degrees

********** DOES NOT EXCEED **********

OUTSIDE APPROACH ANGULAR CRITERIA FOR THIS RUNWAY.

****
BEGIN AIRPORT ANALYSIS FOR 60M
****

77.17(a)(2) A height AGL or airport elevation, whichever is higher.

********** DOES NOT EXCEED **********

BECAUSE: Airport does not have a runway longer than 3200 feet.

THE REFERENCE AIRPORT IDENT IS:..... 60M

THE AIRPORT ELEVATION IS:..... 1040 ft. AMSL

THE DISTANCE FROM THE CASE TO ARP IS:.. 13.502 NAUTICAL MILES

THE BEARING AIRPORT TO CASE IS:..... 120.617 DEGREES

THE CASE HEIGHT AGL IS:..... 70 ft.

ALLOWABLE HEIGHT..... 2290 ft. AMSL

77.19 (a) A height exceeding a horizontal surface 150 ft. above airport elevation within a radius of >> 60M <<.

********** DOES NOT EXCEED **********

NOT WITHIN SPECIFIED HORIZONTAL SURFACE AREA

77.19(b) A height exceeding a conical surface (a slope outward 4000 ft. from the horizontal surface at 20/1 ratio).

********** DOES NOT EXCEED **********

NOT WITHIN SPECIFIED CONICAL SURFACE AREA

****
* BEGIN RUNWAY ANALYSIS *
****

EXISTING RUNWAY 01/19

77.19(c) A height exceeding runway primary surface.

********** DOES NOT EXCEED **********

NOT WITHIN SPECIFIED RUNWAY PRIMARY SURFACE

77.19(e) A height exceeding a transitional surface abeam runway.

********** DOES NOT EXCEED **********

NOT WITHIN SPECIFIED RUNWAY ABEAM TRANSITIONAL SURFACE

77.19(d) A height exceeding an approach surface of RUNWAY 01.

THE BEARING TO THE CASE FROM THE THRESHOLD IS..... 119.91 degrees

********** DOES NOT EXCEED **********

OUTSIDE APPROACH ANGULAR CRITERIA FOR THIS RUNWAY.

****
BEGIN AIRPORT ANALYSIS FOR 3B3
****

77.17(a)(2) A height AGL or airport elevation, whichever is higher.

********** DOES NOT EXCEED **********

BECAUSE: Airport does not have a runway longer than 3200 feet.

THE REFERENCE AIRPORT IDENT IS:..... 3B3

THE AIRPORT ELEVATION IS:..... 459 ft. AMSL

THE DISTANCE FROM THE CASE TO ARP IS:.. 15.4877 NAUTICAL MILES

THE BEARING AIRPORT TO CASE IS:..... 165.208 DEGREES

THE CASE HEIGHT AGL IS:..... 70 ft.

ALLOWABLE HEIGHT..... 1907 ft. AMSL

77.19 (a) A height exceeding a horizontal surface 150 ft. above airport elevation within a radius of >> 3B3 <<.

********** DOES NOT EXCEED **********

NOT WITHIN SPECIFIED HORIZONTAL SURFACE AREA

77.19(b) A height exceeding a conical surface (a slope outward 4000 ft. from the horizontal surface at 20/1 ratio).

********** DOES NOT EXCEED **********

NOT WITHIN SPECIFIED CONICAL SURFACE AREA

****
* BEGIN RUNWAY ANALYSIS *
****

EXISTING RUNWAY 16/34

77.19(c) A height exceeding runway primary surface.

********** DOES NOT EXCEED **********

NOT WITHIN SPECIFIED RUNWAY PRIMARY SURFACE

77.19(e) A height exceeding a transitional surface abeam runway.

********** DOES NOT EXCEED **********

NOT WITHIN SPECIFIED RUNWAY ABEAM TRANSITIONAL SURFACE

77.19(d) A height exceeding an approach surface of RUNWAY 34.

THE BEARING TO THE CASE FROM THE THRESHOLD IS..... 165.661 degrees

THE ABEAM BEARING TO THE CENTERLINE IS..... 229.67 degrees

THE CENTERLINE OUTBOUND TRUE BEARING IS..... 139.67 degrees

THE ABEAM DISTANCE TO CENTERLINE FROM CASE IS..... 40488.4 ft.

********** DOES NOT EXCEED **********

CASE MEETS ANGULAR CRITERIA BUT IS LOCATED
GREATER THAN 50,000 ft. FROM THE START OF
ANY APPROACH TYPE, OUT BY 33204.3 feet

****
BEGIN AIRPORT ANALYSIS FOR 3B0
****

77.17(a)(2) A height AGL or airport elevation, whichever is higher.

********** DOES NOT EXCEED **********

BECAUSE: Location studied is further than 5.99 NM from ARP.

THE REFERENCE AIRPORT IDENT IS:..... 3B0

THE AIRPORT ELEVATION IS:..... 699 ft. AMSL

THE DISTANCE FROM THE CASE TO ARP IS:.. 15.6216 NAUTICAL MILES

THE BEARING AIRPORT TO CASE IS:..... 73.133 DEGREES

THE CASE HEIGHT AGL IS:..... 70 ft.

ALLOWABLE HEIGHT..... 2161 ft. AMSL

77.19 (a) A height exceeding a horizontal surface 150 ft. above airport elevation within a radius of >> 3B0 <<.

********** DOES NOT EXCEED **********

NOT WITHIN SPECIFIED HORIZONTAL SURFACE AREA

77.19(b) A height exceeding a conical surface (a slope outward 4000 ft. from the horizontal surface at 20/1 ratio).

********** DOES NOT EXCEED **********

NOT WITHIN SPECIFIED CONICAL SURFACE AREA

****
* BEGIN RUNWAY ANALYSIS *
****

EXISTING RUNWAY 02/20

77.19(c) A height exceeding runway primary surface.

********** DOES NOT EXCEED **********

NOT WITHIN SPECIFIED RUNWAY PRIMARY SURFACE

77.19(e) A height exceeding a transitional surface abeam runway.

********** DOES NOT EXCEED **********

NOT WITHIN SPECIFIED RUNWAY ABEAM TRANSITIONAL SURFACE

77.19(d) A height exceeding an approach surface of RUNWAY 20.

THE BEARING TO THE CASE FROM THE THRESHOLD IS..... 74.209 degrees

********** DOES NOT EXCEED **********

OUTSIDE APPROACH ANGULAR CRITERIA FOR THIS RUNWAY.

****
* BEGIN RUNWAY ANALYSIS *
****

EXISTING RUNWAY 10/28

77.19(c) A height exceeding runway primary surface.

********** DOES NOT EXCEED **********

NOT WITHIN SPECIFIED RUNWAY PRIMARY SURFACE

77.19(e) A height exceeding a transitional surface abeam runway.

********** DOES NOT EXCEED **********

NOT WITHIN SPECIFIED RUNWAY ABEAM TRANSITIONAL SURFACE

77.19(d) A height exceeding an approach surface of RUNWAY 28.

THE BEARING TO THE CASE FROM THE THRESHOLD IS..... 73.026 degrees

THE ABEAM BEARING TO THE CENTERLINE IS..... 170.42 degrees

THE CENTERLINE OUTBOUND TRUE BEARING IS..... 80.42 degrees

THE ABEAM DISTANCE TO CENTERLINE FROM CASE IS..... 12059.4 ft.

********** DOES NOT EXCEED **********

CASE MEETS ANGULAR CRITERIA BUT IS LOCATED
GREATER THAN 50,000 ft. FROM THE START OF
ANY APPROACH TYPE, OUT BY 42976 feet

****
BEGIN AIRPORT ANALYSIS FOR SFZ
****

77.17(a)(2) A height AGL or airport elevation, whichever is higher.

********** DOES NOT EXCEED **********

BECAUSE: Location studied is further than 5.99 NM from ARP.

THE REFERENCE AIRPORT IDENT IS:..... SFZ

THE AIRPORT ELEVATION IS:..... 440 ft. AMSL

THE DISTANCE FROM THE CASE TO ARP IS:.. 18.0199 NAUTICAL MILES

THE BEARING AIRPORT TO CASE IS:..... 328.273 DEGREES

THE CASE HEIGHT AGL IS:..... 70 ft.

ALLOWABLE HEIGHT..... 2141 ft. AMSL

77.19 (a) A height exceeding a horizontal surface 150 ft. above airport elevation within a radius of >> SFZ <<.

********** DOES NOT EXCEED **********

NOT WITHIN SPECIFIED HORIZONTAL SURFACE AREA

77.19(b) A height exceeding a conical surface (a slope outward 4000 ft. from the horizontal surface at 20/1 ratio).

********** DOES NOT EXCEED **********

NOT WITHIN SPECIFIED CONICAL SURFACE AREA

****
* BEGIN RUNWAY ANALYSIS *
****

EXISTING RUNWAY 05/23

77.19(c) A height exceeding runway primary surface.

********** DOES NOT EXCEED **********

NOT WITHIN SPECIFIED RUNWAY PRIMARY SURFACE

77.19(e) A height exceeding a transitional surface abeam runway.

********** DOES NOT EXCEED **********

NOT WITHIN SPECIFIED RUNWAY ABEAM TRANSITIONAL SURFACE

77.19(d) A height exceeding an approach surface of RUNWAY 23.

THE BEARING TO THE CASE FROM THE THRESHOLD IS..... 326.771 degrees

********** DOES NOT EXCEED **********

OUTSIDE APPROACH ANGULAR CRITERIA FOR THIS RUNWAY.

****
* BEGIN RUNWAY ANALYSIS *
****

EXISTING RUNWAY 15/33

77.19(c) A height exceeding runway primary surface.

********** DOES NOT EXCEED **********

NOT WITHIN SPECIFIED RUNWAY PRIMARY SURFACE

77.19(e) A height exceeding a transitional surface abeam runway.

********** DOES NOT EXCEED **********

NOT WITHIN SPECIFIED RUNWAY ABEAM TRANSITIONAL SURFACE

77.19(d) A height exceeding an approach surface of RUNWAY 15.

THE BEARING TO THE CASE FROM THE THRESHOLD IS..... 328.768 degrees

THE ABEAM BEARING TO THE CENTERLINE IS..... 229.58 degrees

THE CENTERLINE OUTBOUND TRUE BEARING IS..... 319.58 degrees

THE ABEAM DISTANCE TO CENTERLINE FROM CASE IS..... 17317.9 ft.

********** DOES NOT EXCEED **********

CASE MEETS ANGULAR CRITERIA BUT IS LOCATED
GREATER THAN 50,000 ft. FROM THE START OF
ANY APPROACH TYPE, OUT BY 57100.9 feet

****
BEGIN AIRPORT ANALYSIS FOR 6B6
****

77.17(a)(2) A height AGL or airport elevation, whichever is higher.

********** DOES NOT EXCEED **********

BECAUSE: Airport does not have a runway longer than 3200 feet.

THE REFERENCE AIRPORT IDENT IS:..... 6B6

THE AIRPORT ELEVATION IS:..... 268 ft. AMSL

THE DISTANCE FROM THE CASE TO ARP IS:.. 18.9588 NAUTICAL MILES

THE BEARING AIRPORT TO CASE IS:..... 205.834 DEGREES

THE CASE HEIGHT AGL IS:..... 70 ft.

ALLOWABLE HEIGHT..... 2210 ft. AMSL

77.19 (a) A height exceeding a horizontal surface 150 ft. above airport elevation within a radius of >> 6B6 <<.

********** DOES NOT EXCEED **********

NOT WITHIN SPECIFIED HORIZONTAL SURFACE AREA

77.19(b) A height exceeding a conical surface (a slope outward 4000 ft. from the horizontal surface at 20/1 ratio).

********** DOES NOT EXCEED **********

NOT WITHIN SPECIFIED CONICAL SURFACE AREA

****
* BEGIN RUNWAY ANALYSIS *
****

EXISTING RUNWAY 03/21

77.19(c) A height exceeding runway primary surface.

********** DOES NOT EXCEED **********

NOT WITHIN SPECIFIED RUNWAY PRIMARY SURFACE

77.19(e) A height exceeding a transitional surface abeam runway.

********** DOES NOT EXCEED **********

NOT WITHIN SPECIFIED RUNWAY ABEAM TRANSITIONAL SURFACE

77.19(d) A height exceeding an approach surface of RUNWAY 03.

THE BEARING TO THE CASE FROM THE THRESHOLD IS..... 205.801 degrees

THE ABEAM BEARING TO THE CENTERLINE IS..... 106.7 degrees

THE CENTERLINE OUTBOUND TRUE BEARING IS..... 196.7 degrees

THE ABEAM DISTANCE TO CENTERLINE FROM CASE IS..... 18235 ft.

********** DOES NOT EXCEED **********

CASE MEETS ANGULAR CRITERIA BUT IS LOCATED

GREATER THAN 50,000 ft. FROM THE START OF
ANY APPROACH TYPE, OUT BY 62318.9 feet

****
* BEGIN RUNWAY ANALYSIS *
****

EXISTING RUNWAY 12/30

77.19(c) A height exceeding runway primary surface.

********** DOES NOT EXCEED **********

NOT WITHIN SPECIFIED RUNWAY PRIMARY SURFACE

77.19(e) A height exceeding a transitional surface abeam runway.

********** DOES NOT EXCEED **********

NOT WITHIN SPECIFIED RUNWAY ABEAM TRANSITIONAL SURFACE

77.19(d) A height exceeding an approach surface of RUNWAY 12.

THE BEARING TO THE CASE FROM THE THRESHOLD IS..... 205.674 degrees

********** DOES NOT EXCEED **********

OUTSIDE APPROACH ANGULAR CRITERIA FOR THIS RUNWAY.

****
BEGIN AIRPORT ANALYSIS FOR C44
****

77.17(a)(2) A height AGL or airport elevation, whichever is higher.

********** DOES NOT EXCEED **********

BECAUSE: Airport does not have a runway longer than 3200 feet.

THE REFERENCE AIRPORT IDENT IS:..... C44

THE AIRPORT ELEVATION IS:..... 770 ft. AMSL

THE DISTANCE FROM THE CASE TO ARP IS:.. 20.5104 NAUTICAL MILES

THE BEARING AIRPORT TO CASE IS:..... 49.704 DEGREES

THE CASE HEIGHT AGL IS:..... 70 ft.

ALLOWABLE HEIGHT..... 2721 ft. AMSL

77.19 (a) A height exceeding a horizontal surface 150 ft. above airport elevation within a radius of >> C44 <<.

********** DOES NOT EXCEED **********

NOT WITHIN SPECIFIED HORIZONTAL SURFACE AREA

77.19(b) A height exceeding a conical surface (a slope outward 4000 ft. from the horizontal surface at 20/1 ratio).

********** DOES NOT EXCEED **********

NOT WITHIN SPECIFIED CONICAL SURFACE AREA

****
* BEGIN RUNWAY ANALYSIS *
****

EXISTING RUNWAY 17/35

77.19(c) A height exceeding runway primary surface.

********** DOES NOT EXCEED **********

NOT WITHIN SPECIFIED RUNWAY PRIMARY SURFACE

77.19(e) A height exceeding a transitional surface abeam runway.

********** DOES NOT EXCEED **********

NOT WITHIN SPECIFIED RUNWAY ABEAM TRANSITIONAL SURFACE

77.19(d) A height exceeding an approach surface of RUNWAY 17.

THE BEARING TO THE CASE FROM THE THRESHOLD IS..... 50.202 degrees

********** DOES NOT EXCEED **********

OUTSIDE APPROACH ANGULAR CRITERIA FOR THIS RUNWAY.

****
BEGIN AIRPORT ANALYSIS FOR 8B5

```
*****************************************

77.17(a)(2) A height AGL or airport elevation, whichever is higher.

            ************* DOES NOT EXCEED **************

            BECAUSE: Airport does not have a runway longer than 3200 feet.

            THE REFERENCE AIRPORT IDENT IS:........ 8B5

            THE AIRPORT ELEVATION IS:............... 589  ft. AMSL

            THE DISTANCE FROM THE CASE TO ARP IS:.. 21.8475  NAUTICAL MILES

            THE BEARING AIRPORT TO CASE IS:........ 119.791  DEGREES

            THE CASE HEIGHT AGL IS:................ 70  ft.

            ALLOWABLE HEIGHT....................... 2673  ft. AMSL

77.19 (a) A height exceeding a horizontal surface 150 ft. above
          airport elevation within a radius of >> 8B5 <<.

            ************* DOES NOT EXCEED **************

            NOT WITHIN SPECIFIED HORIZONTAL SURFACE AREA

77.19(b) A height exceeding a conical surface (a slope outward 4000 ft.
          from the horizontal surface at 20/1 ratio).

            ************* DOES NOT EXCEED **************

            NOT WITHIN SPECIFIED CONICAL SURFACE AREA

                         *************************
                         * BEGIN RUNWAY ANALYSIS *
                         *************************

                           EXISTING RUNWAY 06/24

77.19(c) A height exceeding runway primary surface.

            ************* DOES NOT EXCEED **************

            NOT WITHIN SPECIFIED RUNWAY PRIMARY SURFACE

77.19(e) A height exceeding a transitional surface abeam runway.

            ************* DOES NOT EXCEED **************
```

NOT WITHIN SPECIFIED RUNWAY ABEAM TRANSITIONAL SURFACE

77.19(d) A height exceeding an approach surface of RUNWAY 24.

THE BEARING TO THE CASE FROM THE THRESHOLD IS..... 120.496 degrees

********** DOES NOT EXCEED **********

OUTSIDE APPROACH ANGULAR CRITERIA FOR THIS RUNWAY.

****
BEGIN AIRPORT ANALYSIS FOR FIT
****

77.17(a)(2) A height AGL or airport elevation, whichever is higher.

********** DOES NOT EXCEED **********

BECAUSE: Location studied is further than 5.99 NM from ARP.

THE REFERENCE AIRPORT IDENT IS:..... FIT

THE AIRPORT ELEVATION IS:..... 348 ft. AMSL

THE DISTANCE FROM THE CASE TO ARP IS:.. 22.8018 NAUTICAL MILES

THE BEARING AIRPORT TO CASE IS:..... 173.849 DEGREES

THE CASE HEIGHT AGL IS:..... 70 ft.

ALLOWABLE HEIGHT..... 2595 ft. AMSL

77.19 (a) A height exceeding a horizontal surface 150 ft. above airport elevation within a radius of >> FIT <<.

********** DOES NOT EXCEED **********

NOT WITHIN SPECIFIED HORIZONTAL SURFACE AREA

77.19(b) A height exceeding a conical surface (a slope outward 4000 ft. from the horizontal surface at 20/1 ratio).

********** DOES NOT EXCEED **********

NOT WITHIN SPECIFIED CONICAL SURFACE AREA

```
                         *************************
                         * BEGIN RUNWAY ANALYSIS *
                         *************************

                           EXISTING RUNWAY 02/20

77.19(c) A height exceeding runway primary surface.

          ************* DOES NOT EXCEED **************

          NOT WITHIN SPECIFIED RUNWAY PRIMARY SURFACE


77.19(e) A height exceeding a transitional surface abeam runway.

          ************* DOES NOT EXCEED **************

          NOT WITHIN SPECIFIED RUNWAY ABEAM TRANSITIONAL SURFACE


77.19(d) A height exceeding an approach surface of RUNWAY 02.

          THE BEARING TO THE CASE FROM THE THRESHOLD IS....... 173.634  degrees

          THE ABEAM BEARING TO THE CENTERLINE IS............... 98.02 degrees

          THE CENTERLINE OUTBOUND TRUE BEARING IS............. 188.02 degrees

          THE ABEAM DISTANCE TO CENTERLINE FROM CASE IS....... 34064.1 ft.

          ************** DOES NOT EXCEED **************

          CASE MEETS ANGULAR CRITERIA BUT IS LOCATED
          GREATER THAN 50,000 ft. FROM  THE START OF
          ANY APPROACH TYPE, OUT BY 82467.7 feet


                         *************************
                         * BEGIN RUNWAY ANALYSIS *
                         *************************

                           EXISTING RUNWAY 14/32

77.19(c) A height exceeding runway primary surface.

          ************* DOES NOT EXCEED **************

          NOT WITHIN SPECIFIED RUNWAY PRIMARY SURFACE


77.19(e) A height exceeding a transitional surface abeam runway.
```

********** DOES NOT EXCEED **********

NOT WITHIN SPECIFIED RUNWAY ABEAM TRANSITIONAL SURFACE

77.19(d) A height exceeding an approach surface of RUNWAY 32.

THE BEARING TO THE CASE FROM THE THRESHOLD IS..... 174.576 degrees

********** DOES NOT EXCEED **********

OUTSIDE APPROACH ANGULAR CRITERIA FOR THIS RUNWAY.

****
* BEGIN RUNWAY ANALYSIS *
****

PROPOSED RUNWAY 16/34

77.19(c) A height exceeding runway primary surface.

********** DOES NOT EXCEED **********

NOT WITHIN SPECIFIED RUNWAY PRIMARY SURFACE

77.19(e) A height exceeding a transitional surface abeam runway.

********** DOES NOT EXCEED **********

NOT WITHIN SPECIFIED RUNWAY ABEAM TRANSITIONAL SURFACE

77.19(d) A height exceeding an approach surface of RUNWAY 34.

THE BEARING TO THE CASE FROM THE THRESHOLD IS..... 174.507 degrees

THE ABEAM BEARING TO THE CENTERLINE IS..... 228.18 degrees

THE CENTERLINE OUTBOUND TRUE BEARING IS..... 138.18 degrees

THE ABEAM DISTANCE TO CENTERLINE FROM CASE IS..... 80810.9 ft.

********** DOES NOT EXCEED **********

CASE MEETS ANGULAR CRITERIA BUT IS LOCATED
GREATER THAN 50,000 ft. FROM THE START OF
ANY APPROACH TYPE, OUT BY 59967.8 feet

```
*********************************************
       BEGIN AIRPORT ANALYSIS FOR LZD
*********************************************
```

77.17(a)(2) A height AGL or airport elevation, whichever is higher.

********** DOES NOT EXCEED **********

BECAUSE: Airport does not have a runway longer than 3200 feet.

THE REFERENCE AIRPORT IDENT IS:..... LZD

THE AIRPORT ELEVATION IS:..... 238 ft. AMSL

THE DISTANCE FROM THE CASE TO ARP IS:.. 23.1299 NAUTICAL MILES

THE BEARING AIRPORT TO CASE IS:..... 22.37 DEGREES

THE CASE HEIGHT AGL IS:..... 70 ft.

ALLOWABLE HEIGHT..... 2627 ft. AMSL

77.19 (a) A height exceeding a horizontal surface 150 ft. above airport elevation within a radius of >> LZD <<.

********** DOES NOT EXCEED **********

NOT WITHIN SPECIFIED HORIZONTAL SURFACE AREA

77.19(b) A height exceeding a conical surface (a slope outward 4000 ft. from the horizontal surface at 20/1 ratio).

********** DOES NOT EXCEED **********

NOT WITHIN SPECIFIED CONICAL SURFACE AREA

```
*************************
* BEGIN RUNWAY ANALYSIS *
*************************
```

EXISTING RUNWAY 13/31

77.19(c) A height exceeding runway primary surface.

********** DOES NOT EXCEED **********

NOT WITHIN SPECIFIED RUNWAY PRIMARY SURFACE

77.19(e) A height exceeding a transitional surface abeam runway.

********** DOES NOT EXCEED **********

NOT WITHIN SPECIFIED RUNWAY ABEAM TRANSITIONAL SURFACE

77.19(d) A height exceeding an approach surface of RUNWAY 13.

THE BEARING TO THE CASE FROM THE THRESHOLD IS..... 22.98 degrees

********** DOES NOT EXCEED **********

OUTSIDE APPROACH ANGULAR CRITERIA FOR THIS RUNWAY.

****
BEGIN AIRPORT ANALYSIS FOR OWD
****

77.17(a)(2) A height AGL or airport elevation, whichever is higher.

********** DOES NOT EXCEED **********

BECAUSE: Location studied is further than 5.99 NM from ARP.

THE REFERENCE AIRPORT IDENT IS:..... OWD

THE AIRPORT ELEVATION IS:..... 49 ft. AMSL

THE DISTANCE FROM THE CASE TO ARP IS:.. 23.6911 NAUTICAL MILES

THE BEARING AIRPORT TO CASE IS:..... 267.739 DEGREES

THE CASE HEIGHT AGL IS:..... 70 ft.

ALLOWABLE HEIGHT..... 2684 ft. AMSL

77.19 (a) A height exceeding a horizontal surface 150 ft. above airport elevation within a radius of >> OWD <<.

********** DOES NOT EXCEED **********

NOT WITHIN SPECIFIED HORIZONTAL SURFACE AREA

77.19(b) A height exceeding a conical surface (a slope outward 4000 ft. from the horizontal surface at 20/1 ratio).

********** DOES NOT EXCEED **********

NOT WITHIN SPECIFIED CONICAL SURFACE AREA

```
*************************
* BEGIN RUNWAY ANALYSIS *
*************************
```

EXISTING RUNWAY 10/28

77.19(c) A height exceeding runway primary surface.

********** DOES NOT EXCEED **********

NOT WITHIN SPECIFIED RUNWAY PRIMARY SURFACE

77.19(e) A height exceeding a transitional surface abeam runway.

********** DOES NOT EXCEED **********

NOT WITHIN SPECIFIED RUNWAY ABEAM TRANSITIONAL SURFACE

77.19(d) A height exceeding an approach surface of RUNWAY 10.

THE BEARING TO THE CASE FROM THE THRESHOLD IS..... 267.49 degrees

THE ABEAM BEARING TO THE CENTERLINE IS..... 178.76 degrees

THE CENTERLINE OUTBOUND TRUE BEARING IS..... 268.76 degrees

THE ABEAM DISTANCE TO CENTERLINE FROM CASE IS..... 2271.3 ft.

********** DOES NOT EXCEED **********

CASE MEETS ANGULAR CRITERIA BUT IS LOCATED
GREATER THAN 50,000 ft. FROM THE START OF
ANY APPROACH TYPE, OUT BY 92261.8 feet

```
*************************
* BEGIN RUNWAY ANALYSIS *
*************************
```

EXISTING RUNWAY 17/35

77.19(c) A height exceeding runway primary surface.

********** DOES NOT EXCEED **********

NOT WITHIN SPECIFIED RUNWAY PRIMARY SURFACE

77.19(e) A height exceeding a transitional surface abeam runway.

********** DOES NOT EXCEED **********

NOT WITHIN SPECIFIED RUNWAY ABEAM TRANSITIONAL SURFACE

77.19(d) A height exceeding an approach surface of RUNWAY 17.

THE BEARING TO THE CASE FROM THE THRESHOLD IS..... 267.174 degrees

********** DOES NOT EXCEED **********

OUTSIDE APPROACH ANGULAR CRITERIA FOR THIS RUNWAY.

****
BEGIN AIRPORT ANALYSIS FOR 1B9
****

77.17(a)(2) A height AGL or airport elevation, whichever is higher.

********** DOES NOT EXCEED **********

BECAUSE: Location studied is further than 5.99 NM from ARP.

THE REFERENCE AIRPORT IDENT IS:..... 1B9

THE AIRPORT ELEVATION IS:..... 122 ft. AMSL

THE DISTANCE FROM THE CASE TO ARP IS:.. 24.9106 NAUTICAL MILES

THE BEARING AIRPORT TO CASE IS:..... 295.143 DEGREES

THE CASE HEIGHT AGL IS:..... 70 ft.

ALLOWABLE HEIGHT..... 2806 ft. AMSL

77.19 (a) A height exceeding a horizontal surface 150 ft. above airport elevation within a radius of >> 1B9 <<.

********** DOES NOT EXCEED **********

NOT WITHIN SPECIFIED HORIZONTAL SURFACE AREA

77.19(b) A height exceeding a conical surface (a slope outward 4000 ft. from the horizontal surface at 20/1 ratio).

********** DOES NOT EXCEED **********

NOT WITHIN SPECIFIED CONICAL SURFACE AREA

```
*************************
* BEGIN RUNWAY ANALYSIS *
*************************
```

EXISTING RUNWAY 04/22

77.19(c) A height exceeding runway primary surface.

********** DOES NOT EXCEED **********

NOT WITHIN SPECIFIED RUNWAY PRIMARY SURFACE

77.19(e) A height exceeding a transitional surface abeam runway.

********** DOES NOT EXCEED **********

NOT WITHIN SPECIFIED RUNWAY ABEAM TRANSITIONAL SURFACE

77.19(d) A height exceeding an approach surface of RUNWAY 04.

THE BEARING TO THE CASE FROM THE THRESHOLD IS..... 295.568 degrees

********** DOES NOT EXCEED **********

OUTSIDE APPROACH ANGULAR CRITERIA FOR THIS RUNWAY.

```
*************************
* BEGIN RUNWAY ANALYSIS *
*************************
```

EXISTING RUNWAY 14/32

77.19(c) A height exceeding runway primary surface.

********** DOES NOT EXCEED **********

NOT WITHIN SPECIFIED RUNWAY PRIMARY SURFACE

77.19(e) A height exceeding a transitional surface abeam runway.

********** DOES NOT EXCEED **********

NOT WITHIN SPECIFIED RUNWAY ABEAM TRANSITIONAL SURFACE

77.19(d) A height exceeding an approach surface of RUNWAY 14.

THE BEARING TO THE CASE FROM THE THRESHOLD IS..... 295.067 degrees

THE ABEAM BEARING TO THE CENTERLINE IS..... 212.59 degrees

THE CENTERLINE OUTBOUND TRUE BEARING IS..... 302.59 degrees

THE ABEAM DISTANCE TO CENTERLINE FROM CASE IS..... 19633.4 ft.

********** DOES NOT EXCEED **********

CASE MEETS ANGULAR CRITERIA BUT IS LOCATED
GREATER THAN 50,000 ft. FROM THE START OF
ANY APPROACH TYPE, OUT BY 98584.1 feet

****
* BEGIN RUNWAY ANALYSIS *
****

PROPOSED RUNWAY 04/22

77.19(c) A height exceeding runway primary surface.

********** DOES NOT EXCEED **********

NOT WITHIN SPECIFIED RUNWAY PRIMARY SURFACE

77.19(e) A height exceeding a transitional surface abeam runway.

********** DOES NOT EXCEED **********

NOT WITHIN SPECIFIED RUNWAY ABEAM TRANSITIONAL SURFACE

77.19(d) A height exceeding an approach surface of RUNWAY 04.

THE BEARING TO THE CASE FROM THE THRESHOLD IS..... 295.523 degrees

********** DOES NOT EXCEED **********

OUTSIDE APPROACH ANGULAR CRITERIA FOR THIS RUNWAY.

****
BEGIN AIRPORT ANALYSIS FOR BED
****

77.17(a)(2) A height AGL or airport elevation, whichever is higher.

********** DOES NOT EXCEED **********

BECAUSE: Location studied is further than 5.99 NM from ARP.

THE REFERENCE AIRPORT IDENT IS:..... BED

THE AIRPORT ELEVATION IS:..... 132 ft. AMSL

THE DISTANCE FROM THE CASE TO ARP IS:.. 25.5257 NAUTICAL MILES

THE BEARING AIRPORT TO CASE IS:..... 226.204 DEGREES

THE CASE HEIGHT AGL IS:..... 70 ft.

ALLOWABLE HEIGHT..... 2867 ft. AMSL

77.19 (a) A height exceeding a horizontal surface 150 ft. above airport elevation within a radius of >> BED <<.

********** DOES NOT EXCEED **********

NOT WITHIN SPECIFIED HORIZONTAL SURFACE AREA

77.19(b) A height exceeding a conical surface (a slope outward 4000 ft. from the horizontal surface at 20/1 ratio).

********** DOES NOT EXCEED **********

NOT WITHIN SPECIFIED CONICAL SURFACE AREA

****
* BEGIN RUNWAY ANALYSIS *
****

EXISTING RUNWAY 05/23

77.19(c) A height exceeding runway primary surface.

********** DOES NOT EXCEED **********

NOT WITHIN SPECIFIED RUNWAY PRIMARY SURFACE

77.19(e) A height exceeding a transitional surface abeam runway.

********** DOES NOT EXCEED **********

NOT WITHIN SPECIFIED RUNWAY ABEAM TRANSITIONAL SURFACE

77.19(d) A height exceeding an approach surface of RUNWAY 05.

THE BEARING TO THE CASE FROM THE THRESHOLD IS..... 226.311 degrees

THE ABEAM BEARING TO THE CENTERLINE IS..... 127.13 degrees

THE CENTERLINE OUTBOUND TRUE BEARING IS..... 217.13 degrees

THE ABEAM DISTANCE TO CENTERLINE FROM CASE IS..... 24928.9 ft.

********** DOES NOT EXCEED **********

CASE MEETS ANGULAR CRITERIA BUT IS LOCATED
GREATER THAN 50,000 ft. FROM THE START OF
ANY APPROACH TYPE, OUT BY 99748.5 feet

****
* BEGIN RUNWAY ANALYSIS *
****

EXISTING RUNWAY 11/29

77.19(c) A height exceeding runway primary surface.

********** DOES NOT EXCEED **********

NOT WITHIN SPECIFIED RUNWAY PRIMARY SURFACE

77.19(e) A height exceeding a transitional surface abeam runway.

********** DOES NOT EXCEED **********

NOT WITHIN SPECIFIED RUNWAY ABEAM TRANSITIONAL SURFACE

77.19(d) A height exceeding an approach surface of RUNWAY 11.

THE BEARING TO THE CASE FROM THE THRESHOLD IS..... 225.169 degrees

********** DOES NOT EXCEED **********

OUTSIDE APPROACH ANGULAR CRITERIA FOR THIS RUNWAY.

****
BEGIN AIRPORT ANALYSIS FOR GDM
****

77.17(a)(2) A height AGL or airport elevation, whichever is higher.

********** DOES NOT EXCEED **********

BECAUSE: Airport does not have a runway longer than 3200 feet.

THE REFERENCE AIRPORT IDENT IS:..... GDM

THE AIRPORT ELEVATION IS:..... 954 ft. AMSL

THE DISTANCE FROM THE CASE TO ARP IS:.. 26.375 NAUTICAL MILES

THE BEARING AIRPORT TO CASE IS:..... 148.321 DEGREES

THE CASE HEIGHT AGL IS:..... 70 ft.

ALLOWABLE HEIGHT..... 3491 ft. AMSL

77.19 (a) A height exceeding a horizontal surface 150 ft. above airport elevation within a radius of >> GDM <<.

********** DOES NOT EXCEED **********

NOT WITHIN SPECIFIED HORIZONTAL SURFACE AREA

77.19(b) A height exceeding a conical surface (a slope outward 4000 ft. from the horizontal surface at 20/1 ratio).

********** DOES NOT EXCEED **********

NOT WITHIN SPECIFIED CONICAL SURFACE AREA

****
* BEGIN RUNWAY ANALYSIS *
****

EXISTING RUNWAY 18/36

77.19(c) A height exceeding runway primary surface.

********** DOES NOT EXCEED **********

NOT WITHIN SPECIFIED RUNWAY PRIMARY SURFACE

77.19(e) A height exceeding a transitional surface abeam runway.

********** DOES NOT EXCEED **********

NOT WITHIN SPECIFIED RUNWAY ABEAM TRANSITIONAL SURFACE

77.19(d) A height exceeding an approach surface of RUNWAY 36.

THE BEARING TO THE CASE FROM THE THRESHOLD IS..... 148.144 degrees

THE ABEAM BEARING TO THE CENTERLINE IS..... 254.84 degrees

THE CENTERLINE OUTBOUND TRUE BEARING IS..... 164.84 degrees

THE ABEAM DISTANCE TO CENTERLINE FROM CASE IS..... 46127.3 ft.

********** DOES NOT EXCEED **********

CASE MEETS ANGULAR CRITERIA BUT IS LOCATED
GREATER THAN 50,000 ft. FROM THE START OF
ANY APPROACH TYPE, OUT BY 101890.1 feet

****
BEGIN AIRPORT ANALYSIS FOR PVD
****

77.17(a)(2) A height AGL or airport elevation, whichever is higher.

********** DOES NOT EXCEED **********

BECAUSE: Location studied is further than 5.99 NM from ARP.

THE REFERENCE AIRPORT IDENT IS:..... PVD

THE AIRPORT ELEVATION IS:..... 54 ft. AMSL

THE DISTANCE FROM THE CASE TO ARP IS:.. 29.8997 NAUTICAL MILES

THE BEARING AIRPORT TO CASE IS:..... 335.679 DEGREES

THE CASE HEIGHT AGL IS:..... 70 ft.

ALLOWABLE HEIGHT..... 3304 ft. AMSL

77.19 (a) A height exceeding a horizontal surface 150 ft. above
airport elevation within a radius of >> PVD <<.

********** DOES NOT EXCEED **********

NOT WITHIN SPECIFIED HORIZONTAL SURFACE AREA

77.19(b) A height exceeding a conical surface (a slope outward 4000 ft.

from the horizontal surface at 20/1 ratio).

********** DOES NOT EXCEED **********

NOT WITHIN SPECIFIED CONICAL SURFACE AREA

****
* BEGIN RUNWAY ANALYSIS *
****

EXISTING RUNWAY 05/23

77.19(c) A height exceeding runway primary surface.

********** DOES NOT EXCEED **********

NOT WITHIN SPECIFIED RUNWAY PRIMARY SURFACE

77.19(e) A height exceeding a transitional surface abeam runway.

********** DOES NOT EXCEED **********

NOT WITHIN SPECIFIED RUNWAY ABEAM TRANSITIONAL SURFACE

77.19(d) A height exceeding an approach surface of RUNWAY 23.

THE BEARING TO THE CASE FROM THE THRESHOLD IS..... 334.696 degrees

********** DOES NOT EXCEED **********

OUTSIDE APPROACH ANGULAR CRITERIA FOR THIS RUNWAY.

****
* BEGIN RUNWAY ANALYSIS *
****

EXISTING RUNWAY 16/34

77.19(c) A height exceeding runway primary surface.

********** DOES NOT EXCEED **********

NOT WITHIN SPECIFIED RUNWAY PRIMARY SURFACE

77.19(e) A height exceeding a transitional surface abeam runway.

********** DOES NOT EXCEED **********

NOT WITHIN SPECIFIED RUNWAY ABEAM TRANSITIONAL SURFACE

77.19(d) A height exceeding an approach surface of RUNWAY 16.

THE BEARING TO THE CASE FROM THE THRESHOLD IS..... 335.588 degrees

THE ABEAM BEARING TO THE CENTERLINE IS..... 231.56 degrees

THE CENTERLINE OUTBOUND TRUE BEARING IS..... 321.56 degrees

THE ABEAM DISTANCE TO CENTERLINE FROM CASE IS..... 43108.5 ft.

********** DOES NOT EXCEED **********

CASE MEETS ANGULAR CRITERIA BUT IS LOCATED
GREATER THAN 50,000 ft. FROM THE START OF
ANY APPROACH TYPE, OUT BY 122688.7 feet

****
BEGIN AIRPORT ANALYSIS FOR BOS
****

77.17(a)(2) A height AGL or airport elevation, whichever is higher.

********** DOES NOT EXCEED **********

BECAUSE: Location studied is further than 5.99 NM from ARP.

THE REFERENCE AIRPORT IDENT IS:..... BOS

THE AIRPORT ELEVATION IS:..... 19 ft. AMSL

THE DISTANCE FROM THE CASE TO ARP IS:.. 33.0273 NAUTICAL MILES

THE BEARING AIRPORT TO CASE IS:..... 249.93 DEGREES

THE CASE HEIGHT AGL IS:..... 70 ft.

ALLOWABLE HEIGHT..... 3617 ft. AMSL

77.19 (a) A height exceeding a horizontal surface 150 ft. above
airport elevation within a radius of >> BOS <<.

********** DOES NOT EXCEED **********

NOT WITHIN SPECIFIED HORIZONTAL SURFACE AREA

77.19(b) A height exceeding a conical surface (a slope outward 4000 ft. from the horizontal surface at 20/1 ratio).

********** DOES NOT EXCEED **********

NOT WITHIN SPECIFIED CONICAL SURFACE AREA

****
* BEGIN RUNWAY ANALYSIS *
****

EXISTING RUNWAY 04L/22R

77.19(c) A height exceeding runway primary surface.

********** DOES NOT EXCEED **********

NOT WITHIN SPECIFIED RUNWAY PRIMARY SURFACE

77.19(e) A height exceeding a transitional surface abeam runway.

********** DOES NOT EXCEED **********

NOT WITHIN SPECIFIED RUNWAY ABEAM TRANSITIONAL SURFACE

77.19(d) A height exceeding an approach surface of RUNWAY 04L.

THE BEARING TO THE CASE FROM THE THRESHOLD IS..... 250.269 degrees

********** DOES NOT EXCEED **********

OUTSIDE APPROACH ANGULAR CRITERIA FOR THIS RUNWAY.

****
* BEGIN RUNWAY ANALYSIS *
****

EXISTING RUNWAY 04R/22L

77.19(c) A height exceeding runway primary surface.

********** DOES NOT EXCEED **********

NOT WITHIN SPECIFIED RUNWAY PRIMARY SURFACE

77.19(e) A height exceeding a transitional surface abeam runway.

********** DOES NOT EXCEED **********

NOT WITHIN SPECIFIED RUNWAY ABEAM TRANSITIONAL SURFACE

77.19(d) A height exceeding an approach surface of RUNWAY 04R.

THE BEARING TO THE CASE FROM THE THRESHOLD IS..... 251.026 degrees

********** DOES NOT EXCEED **********

OUTSIDE APPROACH ANGULAR CRITERIA FOR THIS RUNWAY.

****
* BEGIN RUNWAY ANALYSIS *
****

EXISTING RUNWAY 09/27

77.19(c) A height exceeding runway primary surface.

********** DOES NOT EXCEED **********

NOT WITHIN SPECIFIED RUNWAY PRIMARY SURFACE

77.19(e) A height exceeding a transitional surface abeam runway.

********** DOES NOT EXCEED **********

NOT WITHIN SPECIFIED RUNWAY ABEAM TRANSITIONAL SURFACE

77.19(d) A height exceeding an approach surface of RUNWAY 09.

THE BEARING TO THE CASE FROM THE THRESHOLD IS..... 250.478 degrees

THE ABEAM BEARING TO THE CENTERLINE IS..... 166.56 degrees

THE CENTERLINE OUTBOUND TRUE BEARING IS..... 256.56 degrees

THE ABEAM DISTANCE TO CENTERLINE FROM CASE IS..... 19366 ft.

********** DOES NOT EXCEED **********

CASE MEETS ANGULAR CRITERIA BUT IS LOCATED
GREATER THAN 50,000 ft. FROM THE START OF
ANY APPROACH TYPE, OUT BY 146832.8 feet

****
* BEGIN RUNWAY ANALYSIS *

```
                        *************************

                          EXISTING RUNWAY 14/32

77.19(c) A height exceeding runway primary surface.

           ************* DOES NOT EXCEED **************

           NOT WITHIN SPECIFIED RUNWAY PRIMARY SURFACE

77.19(e) A height exceeding a transitional surface abeam runway.

           ************* DOES NOT EXCEED **************

           NOT WITHIN SPECIFIED RUNWAY ABEAM TRANSITIONAL SURFACE

77.19(d) A height exceeding an approach surface of RUNWAY 14.

           THE BEARING TO THE CASE FROM THE THRESHOLD IS....... 250.083  degrees

           ************** DOES NOT EXCEED **************

           OUTSIDE APPROACH ANGULAR CRITERIA FOR THIS RUNWAY.

                        *************************
                        * BEGIN RUNWAY ANALYSIS *
                        *************************

                          EXISTING RUNWAY 15L/33R

77.19(c) A height exceeding runway primary surface.

           ************* DOES NOT EXCEED **************

           NOT WITHIN SPECIFIED RUNWAY PRIMARY SURFACE

77.19(e) A height exceeding a transitional surface abeam runway.

           ************* DOES NOT EXCEED **************

           NOT WITHIN SPECIFIED RUNWAY ABEAM TRANSITIONAL SURFACE

77.19(d) A height exceeding an approach surface of RUNWAY 15L.

           THE BEARING TO THE CASE FROM THE THRESHOLD IS....... 248.779  degrees

           ************** DOES NOT EXCEED **************
```

OUTSIDE APPROACH ANGULAR CRITERIA FOR THIS RUNWAY.

```
*************************
* BEGIN RUNWAY ANALYSIS *
*************************
```

EXISTING RUNWAY 15R/33L

77.19(c) A height exceeding runway primary surface.

********** DOES NOT EXCEED **********

NOT WITHIN SPECIFIED RUNWAY PRIMARY SURFACE

77.19(e) A height exceeding a transitional surface abeam runway.

********** DOES NOT EXCEED **********

NOT WITHIN SPECIFIED RUNWAY ABEAM TRANSITIONAL SURFACE

77.19(d) A height exceeding an approach surface of RUNWAY 15R.

THE BEARING TO THE CASE FROM THE THRESHOLD IS..... 248.469 degrees

********** DOES NOT EXCEED **********

OUTSIDE APPROACH ANGULAR CRITERIA FOR THIS RUNWAY.

```
*************************
* BEGIN RUNWAY ANALYSIS *
*************************
```

PROPOSED RUNWAY 14/32

77.19(c) A height exceeding runway primary surface.

********** DOES NOT EXCEED **********

NOT WITHIN SPECIFIED RUNWAY PRIMARY SURFACE

77.19(e) A height exceeding a transitional surface abeam runway.

********** DOES NOT EXCEED **********

NOT WITHIN SPECIFIED RUNWAY ABEAM TRANSITIONAL SURFACE

77.19(d) A height exceeding an approach surface of RUNWAY 14.

THE BEARING TO THE CASE FROM THE THRESHOLD IS..... 250.083 degrees

********** DOES NOT EXCEED **********

OUTSIDE APPROACH ANGULAR CRITERIA FOR THIS RUNWAY.

****
BEGIN AIRPORT ANALYSIS FOR IJD
****

77.17(a)(2) A height AGL or airport elevation, whichever is higher.

********** DOES NOT EXCEED **********

BECAUSE: Location studied is further than 5.99 NM from ARP.

THE REFERENCE AIRPORT IDENT IS:..... IJD

THE AIRPORT ELEVATION IS:..... 246 ft. AMSL

THE DISTANCE FROM THE CASE TO ARP IS:.. 33.5731 NAUTICAL MILES

THE BEARING AIRPORT TO CASE IS:..... 39.284 DEGREES

THE CASE HEIGHT AGL IS:..... 70 ft.

ALLOWABLE HEIGHT..... 3672 ft. AMSL

77.19 (a) A height exceeding a horizontal surface 150 ft. above airport elevation within a radius of >> IJD <<.

********** DOES NOT EXCEED **********

NOT WITHIN SPECIFIED HORIZONTAL SURFACE AREA

77.19(b) A height exceeding a conical surface (a slope outward 4000 ft. from the horizontal surface at 20/1 ratio).

********** DOES NOT EXCEED **********

NOT WITHIN SPECIFIED CONICAL SURFACE AREA

****
* BEGIN RUNWAY ANALYSIS *
****

EXISTING RUNWAY 09/27

77.19(c) A height exceeding runway primary surface.

********** DOES NOT EXCEED **********

NOT WITHIN SPECIFIED RUNWAY PRIMARY SURFACE

77.19(e) A height exceeding a transitional surface abeam runway.

********** DOES NOT EXCEED **********

NOT WITHIN SPECIFIED RUNWAY ABEAM TRANSITIONAL SURFACE

77.19(d) A height exceeding an approach surface of RUNWAY 27.

THE BEARING TO THE CASE FROM THE THRESHOLD IS..... 38.822 degrees

THE ABEAM BEARING TO THE CENTERLINE IS..... 164.42 degrees

THE CENTERLINE OUTBOUND TRUE BEARING IS..... 74.42 degrees

THE ABEAM DISTANCE TO CENTERLINE FROM CASE IS..... 117196.8 ft.

********** DOES NOT EXCEED **********

CASE MEETS ANGULAR CRITERIA BUT IS LOCATED
GREATER THAN 50,000 ft. FROM THE START OF
ANY APPROACH TYPE, OUT BY 114334.5 feet

****
* BEGIN RUNWAY ANALYSIS *
****

EXISTING RUNWAY 18/36

77.19(c) A height exceeding runway primary surface.

********** DOES NOT EXCEED **********

NOT WITHIN SPECIFIED RUNWAY PRIMARY SURFACE

77.19(e) A height exceeding a transitional surface abeam runway.

********** DOES NOT EXCEED **********

NOT WITHIN SPECIFIED RUNWAY ABEAM TRANSITIONAL SURFACE

77.19(d) A height exceeding an approach surface of RUNWAY 18.

THE BEARING TO THE CASE FROM THE THRESHOLD IS..... 39.801 degrees

********** DOES NOT EXCEED **********

OUTSIDE APPROACH ANGULAR CRITERIA FOR THIS RUNWAY.

****
BEGIN AIRPORT ANALYSIS FOR ORE
****

77.17(a)(2) A height AGL or airport elevation, whichever is higher.

********** DOES NOT EXCEED **********

BECAUSE: Location studied is further than 5.99 NM from ARP.

THE REFERENCE AIRPORT IDENT IS:..... ORE

THE AIRPORT ELEVATION IS:..... 556 ft. AMSL

THE DISTANCE FROM THE CASE TO ARP IS:.. 35.1334 NAUTICAL MILES

THE BEARING AIRPORT TO CASE IS:..... 132.44 DEGREES

THE CASE HEIGHT AGL IS:..... 70 ft.

ALLOWABLE HEIGHT..... 3969 ft. AMSL

77.19 (a) A height exceeding a horizontal surface 150 ft. above airport elevation within a radius of >> ORE <<.

********** DOES NOT EXCEED **********

NOT WITHIN SPECIFIED HORIZONTAL SURFACE AREA

77.19(b) A height exceeding a conical surface (a slope outward 4000 ft. from the horizontal surface at 20/1 ratio).

********** DOES NOT EXCEED **********

NOT WITHIN SPECIFIED CONICAL SURFACE AREA

****
* BEGIN RUNWAY ANALYSIS *

```
                         *************************

                           EXISTING RUNWAY 01/19

77.19(c) A height exceeding runway primary surface.

           ************* DOES NOT EXCEED **************

           NOT WITHIN SPECIFIED RUNWAY PRIMARY SURFACE

77.19(e) A height exceeding a transitional surface abeam runway.

           ************* DOES NOT EXCEED **************

           NOT WITHIN SPECIFIED RUNWAY ABEAM TRANSITIONAL SURFACE

77.19(d) A height exceeding an approach surface of RUNWAY 01.

           THE BEARING TO THE CASE FROM THE THRESHOLD IS....... 131.674  degrees

           ************** DOES NOT EXCEED **************

           OUTSIDE APPROACH ANGULAR CRITERIA FOR THIS RUNWAY.

                         *************************
                         * BEGIN RUNWAY ANALYSIS *
                         *************************

                           EXISTING RUNWAY 14/32

77.19(c) A height exceeding runway primary surface.

           ************* DOES NOT EXCEED **************

           NOT WITHIN SPECIFIED RUNWAY PRIMARY SURFACE

77.19(e) A height exceeding a transitional surface abeam runway.

           ************* DOES NOT EXCEED **************

           NOT WITHIN SPECIFIED RUNWAY ABEAM TRANSITIONAL SURFACE

77.19(d) A height exceeding an approach surface of RUNWAY 32.

           THE BEARING TO THE CASE FROM THE THRESHOLD IS....... 132.739  degrees

           THE ABEAM BEARING TO THE CENTERLINE IS............... 217.1 degrees
```

THE CENTERLINE OUTBOUND TRUE BEARING IS..... 127.1 degrees

THE ABEAM DISTANCE TO CENTERLINE FROM CASE IS..... 19298.5 ft.

********** DOES NOT EXCEED **********

CASE MEETS ANGULAR CRITERIA BUT IS LOCATED
GREATER THAN 50,000 ft. FROM THE START OF
ANY APPROACH TYPE, OUT BY 159977.4 feet

****
* BEGIN RUNWAY ANALYSIS *
****

PROPOSED RUNWAY 14/32

77.19(c) A height exceeding runway primary surface.

********** DOES NOT EXCEED **********

NOT WITHIN SPECIFIED RUNWAY PRIMARY SURFACE

77.19(e) A height exceeding a transitional surface abeam runway.

********** DOES NOT EXCEED **********

NOT WITHIN SPECIFIED RUNWAY ABEAM TRANSITIONAL SURFACE

77.19(d) A height exceeding an approach surface of RUNWAY 32.

THE BEARING TO THE CASE FROM THE THRESHOLD IS..... 132.739 degrees

THE ABEAM BEARING TO THE CENTERLINE IS..... 217.1 degrees

THE CENTERLINE OUTBOUND TRUE BEARING IS..... 127.1 degrees

THE ABEAM DISTANCE TO CENTERLINE FROM CASE IS..... 19298.5 ft.

********** DOES NOT EXCEED **********

CASE MEETS ANGULAR CRITERIA BUT IS LOCATED
GREATER THAN 50,000 ft. FROM THE START OF
ANY APPROACH TYPE, OUT BY 159977.4 feet

****
* BEGIN RUNWAY ANALYSIS *
****

PROPOSED RUNWAY 01/19

77.19(c) A height exceeding runway primary surface.

********** DOES NOT EXCEED **********

NOT WITHIN SPECIFIED RUNWAY PRIMARY SURFACE

77.19(e) A height exceeding a transitional surface abeam runway.

********** DOES NOT EXCEED **********

NOT WITHIN SPECIFIED RUNWAY ABEAM TRANSITIONAL SURFACE

77.19(d) A height exceeding an approach surface of RUNWAY 01.

THE BEARING TO THE CASE FROM THE THRESHOLD IS..... 131.674 degrees

********** DOES NOT EXCEED **********

OUTSIDE APPROACH ANGULAR CRITERIA FOR THIS RUNWAY.

****
BEGIN AIRPORT ANALYSIS FOR TAN
****

77.17(a)(2) A height AGL or airport elevation, whichever is higher.

********** DOES NOT EXCEED **********

BECAUSE: Location studied is further than 5.99 NM from ARP.

THE REFERENCE AIRPORT IDENT IS:..... TAN

THE AIRPORT ELEVATION IS:..... 42 ft. AMSL

THE DISTANCE FROM THE CASE TO ARP IS:.. 35.6717 NAUTICAL MILES

THE BEARING AIRPORT TO CASE IS:..... 300.716 DEGREES

THE CASE HEIGHT AGL IS:..... 70 ft.

ALLOWABLE HEIGHT..... 3882 ft. AMSL

77.19 (a) A height exceeding a horizontal surface 150 ft. above airport elevation within a radius of >> TAN <<.

********** DOES NOT EXCEED **********

NOT WITHIN SPECIFIED HORIZONTAL SURFACE AREA

77.19(b) A height exceeding a conical surface (a slope outward 4000 ft. from the horizontal surface at 20/1 ratio).

********** DOES NOT EXCEED **********

NOT WITHIN SPECIFIED CONICAL SURFACE AREA

****
* BEGIN RUNWAY ANALYSIS *
****

EXISTING RUNWAY 04/22

77.19(c) A height exceeding runway primary surface.

********** DOES NOT EXCEED **********

NOT WITHIN SPECIFIED RUNWAY PRIMARY SURFACE

77.19(e) A height exceeding a transitional surface abeam runway.

********** DOES NOT EXCEED **********

NOT WITHIN SPECIFIED RUNWAY ABEAM TRANSITIONAL SURFACE

77.19(d) A height exceeding an approach surface of RUNWAY 22.

THE BEARING TO THE CASE FROM THE THRESHOLD IS..... 300.286 degrees

********** DOES NOT EXCEED **********

OUTSIDE APPROACH ANGULAR CRITERIA FOR THIS RUNWAY.

****
* BEGIN RUNWAY ANALYSIS *
****

EXISTING RUNWAY 12/30

77.19(c) A height exceeding runway primary surface.

********** DOES NOT EXCEED **********

NOT WITHIN SPECIFIED RUNWAY PRIMARY SURFACE

77.19(e) A height exceeding a transitional surface abeam runway.

********** DOES NOT EXCEED **********

NOT WITHIN SPECIFIED RUNWAY ABEAM TRANSITIONAL SURFACE

77.19(d) A height exceeding an approach surface of RUNWAY 12.

THE BEARING TO THE CASE FROM THE THRESHOLD IS..... 300.877 degrees

THE ABEAM BEARING TO THE CENTERLINE IS..... 197.68 degrees

THE CENTERLINE OUTBOUND TRUE BEARING IS..... 287.68 degrees

THE ABEAM DISTANCE TO CENTERLINE FROM CASE IS..... 49259.4 ft.

********** DOES NOT EXCEED **********

CASE MEETS ANGULAR CRITERIA BUT IS LOCATED
GREATER THAN 50,000 ft. FROM THE START OF
ANY APPROACH TYPE, OUT BY 160506.8 feet

****
BEGIN AIRPORT ANALYSIS FOR 1M8
****

77.17(a)(2) A height AGL or airport elevation, whichever is higher.

********** DOES NOT EXCEED **********

BECAUSE: Airport does not have a runway longer than 3200 feet.

THE REFERENCE AIRPORT IDENT IS:..... 1M8

THE AIRPORT ELEVATION IS:..... 73 ft. AMSL

THE DISTANCE FROM THE CASE TO ARP IS:.. 36.4244 NAUTICAL MILES

THE BEARING AIRPORT TO CASE IS:..... 303.932 DEGREES

THE CASE HEIGHT AGL IS:..... 70 ft.

ALLOWABLE HEIGHT..... 3957 ft. AMSL

77.19 (a) A height exceeding a horizontal surface 150 ft. above

airport elevation within a radius of >> 1M8 <<.

********** DOES NOT EXCEED **********

NOT WITHIN SPECIFIED HORIZONTAL SURFACE AREA

77.19(b) A height exceeding a conical surface (a slope outward 4000 ft. from the horizontal surface at 20/1 ratio).

********** DOES NOT EXCEED **********

NOT WITHIN SPECIFIED CONICAL SURFACE AREA

****
* BEGIN RUNWAY ANALYSIS *
****

EXISTING RUNWAY 09/27

77.19(c) A height exceeding runway primary surface.

********** DOES NOT EXCEED **********

NOT WITHIN SPECIFIED RUNWAY PRIMARY SURFACE

77.19(e) A height exceeding a transitional surface abeam runway.

********** DOES NOT EXCEED **********

NOT WITHIN SPECIFIED RUNWAY ABEAM TRANSITIONAL SURFACE

77.19(d) A height exceeding an approach surface of RUNWAY 09.

THE BEARING TO THE CASE FROM THE THRESHOLD IS..... 304.237 degrees

********** DOES NOT EXCEED **********

OUTSIDE APPROACH ANGULAR CRITERIA FOR THIS RUNWAY.

****
BEGIN AIRPORT ANALYSIS FOR 7B9
****

77.17(a)(2) A height AGL or airport elevation, whichever is higher.

********** DOES NOT EXCEED **********

BECAUSE: Airport does not have a runway longer than 3200 feet.

THE REFERENCE AIRPORT IDENT IS:..... 7B9

THE AIRPORT ELEVATION IS:..... 253 ft. AMSL

THE DISTANCE FROM THE CASE TO ARP IS:.. 36.8813 NAUTICAL MILES

THE BEARING AIRPORT TO CASE IS:..... 65.695 DEGREES

THE CASE HEIGHT AGL IS:..... 70 ft.

ALLOWABLE HEIGHT..... 4003 ft. AMSL

77.19 (a) A height exceeding a horizontal surface 150 ft. above airport elevation within a radius of >> 7B9 <<.

********** DOES NOT EXCEED **********

NOT WITHIN SPECIFIED HORIZONTAL SURFACE AREA

77.19(b) A height exceeding a conical surface (a slope outward 4000 ft. from the horizontal surface at 20/1 ratio).

********** DOES NOT EXCEED **********

NOT WITHIN SPECIFIED CONICAL SURFACE AREA

****
* BEGIN RUNWAY ANALYSIS *
****

EXISTING RUNWAY 01/19

77.19(c) A height exceeding runway primary surface.

********** DOES NOT EXCEED **********

NOT WITHIN SPECIFIED RUNWAY PRIMARY SURFACE

77.19(e) A height exceeding a transitional surface abeam runway.

********** DOES NOT EXCEED **********

NOT WITHIN SPECIFIED RUNWAY ABEAM TRANSITIONAL SURFACE

77.19(d) A height exceeding an approach surface of RUNWAY 19.

THE BEARING TO THE CASE FROM THE THRESHOLD IS..... 65.944 degrees

********** DOES NOT EXCEED **********

OUTSIDE APPROACH ANGULAR CRITERIA FOR THIS RUNWAY.

****
BEGIN AIRPORT ANALYSIS FOR CEF
****

77.17(a)(2) A height AGL or airport elevation, whichever is higher.

********** DOES NOT EXCEED **********

BECAUSE: Location studied is further than 5.99 NM from ARP.

THE REFERENCE AIRPORT IDENT IS:..... CEF

THE AIRPORT ELEVATION IS:..... 241 ft. AMSL

THE DISTANCE FROM THE CASE TO ARP IS:.. 37.0802 NAUTICAL MILES

THE BEARING AIRPORT TO CASE IS:..... 91.919 DEGREES

THE CASE HEIGHT AGL IS:..... 70 ft.

ALLOWABLE HEIGHT..... 4023 ft. AMSL

77.21(a)(1) A height exceeding military inner horizontal surface 150' above airport elevation within a 7,500 feet of >> CEF <<.

********** DOES NOT EXCEED **********

NOT WITHIN SPECIFIED HORIZONTAL SURFACE AREA

77.21(a)(2) A height exceeding military conical surface (a slope outward 7,000' from the inner horizontal surface at 20/1 ratio).

********** DOES NOT EXCEED **********

NOT WITHIN SPECIFIED CONICAL SURFACE AREA

77.21(a)(3) A height exceeding military outer horizontal surface 500' above airport elevation between 14,500' and 44,500' of >> CEF <<.

********** DOES NOT EXCEED **********

NOT WITHIN SPECIFIED HORIZONTAL SURFACE AREA

```
*************************
* BEGIN RUNWAY ANALYSIS *
*************************
```

EXISTING RUNWAY 05/23

77.21(b)(1) A height exceeding military primary surface.

********** DOES NOT EXCEED **********

NOT WITHIN SPECIFIED RUNWAY PRIMARY SURFACE

77.19(e) A height exceeding a transitional surface abeam runway.

********** DOES NOT EXCEED **********

NOT WITHIN SPECIFIED RUNWAY ABEAM TRANSITIONAL SURFACE

77.21(b)(2) A height exceeding military clear zone surface.

********** DOES NOT EXCEED **********

NOT WITHIN MILITARY RUNWAY CLEAR ZONE SURFACE

77.21(b)(3) A height exceeding military approach surface of RUNWAY 23.

THE BEARING TO THE CASE FROM THE THRESHOLD IS..... 92.865 degrees

********** DOES NOT EXCEED **********

OUTSIDE APPROACH ANGULAR CRITERIA FOR THIS RUNWAY.

```
*************************
* BEGIN RUNWAY ANALYSIS *
*************************
```

EXISTING RUNWAY 15/33

77.21(b)(1) A height exceeding military primary surface.

********** DOES NOT EXCEED **********

NOT WITHIN SPECIFIED RUNWAY PRIMARY SURFACE

77.19(e) A height exceeding a transitional surface abeam runway.

********** DOES NOT EXCEED **********

NOT WITHIN SPECIFIED RUNWAY ABEAM TRANSITIONAL SURFACE

77.21(b)(2) A height exceeding military clear zone surface.

********** DOES NOT EXCEED **********

NOT WITHIN MILITARY RUNWAY CLEAR ZONE SURFACE

77.21(b)(3) A height exceeding military approach surface of RUNWAY 33.

THE BEARING TO THE CASE FROM THE THRESHOLD IS..... 91.825 degrees

********** DOES NOT EXCEED **********

OUTSIDE APPROACH ANGULAR CRITERIA FOR THIS RUNWAY.

****
BEGIN AIRPORT ANALYSIS FOR OQU
****

77.17(a)(2) A height AGL or airport elevation, whichever is higher.

********** DOES NOT EXCEED **********

BECAUSE: Location studied is further than 5.99 NM from ARP.

THE REFERENCE AIRPORT IDENT IS:..... OQU

THE AIRPORT ELEVATION IS:..... 18 ft. AMSL

THE DISTANCE FROM THE CASE TO ARP IS:.. 37.1 NAUTICAL MILES

THE BEARING AIRPORT TO CASE IS:..... 339.474 DEGREES

THE CASE HEIGHT AGL IS:..... 70 ft.

ALLOWABLE HEIGHT..... 4024 ft. AMSL

77.19 (a) A height exceeding a horizontal surface 150 ft. above airport elevation within a radius of >> OQU <<.

********** DOES NOT EXCEED **********

NOT WITHIN SPECIFIED HORIZONTAL SURFACE AREA

77.19(b) A height exceeding a conical surface (a slope outward 4000 ft. from the horizontal surface at 20/1 ratio).

********** DOES NOT EXCEED **********

NOT WITHIN SPECIFIED CONICAL SURFACE AREA

****
* BEGIN RUNWAY ANALYSIS *
****

EXISTING RUNWAY 05/23

77.19(c) A height exceeding runway primary surface.

********** DOES NOT EXCEED **********

NOT WITHIN SPECIFIED RUNWAY PRIMARY SURFACE

77.19(e) A height exceeding a transitional surface abeam runway.

********** DOES NOT EXCEED **********

NOT WITHIN SPECIFIED RUNWAY ABEAM TRANSITIONAL SURFACE

77.19(d) A height exceeding an approach surface of RUNWAY 23.

THE BEARING TO THE CASE FROM THE THRESHOLD IS..... 338.949 degrees

********** DOES NOT EXCEED **********

OUTSIDE APPROACH ANGULAR CRITERIA FOR THIS RUNWAY.

****
* BEGIN RUNWAY ANALYSIS *
****

EXISTING RUNWAY 16/34

77.19(c) A height exceeding runway primary surface.

********** DOES NOT EXCEED **********

NOT WITHIN SPECIFIED RUNWAY PRIMARY SURFACE

77.19(e) A height exceeding a transitional surface abeam runway.

********** DOES NOT EXCEED **********

NOT WITHIN SPECIFIED RUNWAY ABEAM TRANSITIONAL SURFACE

77.19(d) A height exceeding an approach surface of RUNWAY 16.

THE BEARING TO THE CASE FROM THE THRESHOLD IS..... 339.76 degrees

THE ABEAM BEARING TO THE CENTERLINE IS..... 235.01 degrees

THE CENTERLINE OUTBOUND TRUE BEARING IS..... 325.01 degrees

THE ABEAM DISTANCE TO CENTERLINE FROM CASE IS..... 56202.4 ft.

********** DOES NOT EXCEED **********

CASE MEETS ANGULAR CRITERIA BUT IS LOCATED
GREATER THAN 50,000 ft. FROM THE START OF
ANY APPROACH TYPE, OUT BY 163652.6 feet

****
BEGIN AIRPORT ANALYSIS FOR ASH
****

77.17(a)(2) A height AGL or airport elevation, whichever is higher.

********** DOES NOT EXCEED **********

BECAUSE: Location studied is further than 5.99 NM from ARP.

THE REFERENCE AIRPORT IDENT IS:..... ASH

THE AIRPORT ELEVATION IS:..... 200 ft. AMSL

THE DISTANCE FROM THE CASE TO ARP IS:.. 37.3273 NAUTICAL MILES

THE BEARING AIRPORT TO CASE IS:..... 192.972 DEGREES

THE CASE HEIGHT AGL IS:..... 70 ft.

ALLOWABLE HEIGHT..... 4047 ft. AMSL

77.19 (a) A height exceeding a horizontal surface 150 ft. above
airport elevation within a radius of >> ASH <<.

********** DOES NOT EXCEED **********

NOT WITHIN SPECIFIED HORIZONTAL SURFACE AREA

77.19(b) A height exceeding a conical surface (a slope outward 4000 ft. from the horizontal surface at 20/1 ratio).

********** DOES NOT EXCEED **********

NOT WITHIN SPECIFIED CONICAL SURFACE AREA

****
* BEGIN RUNWAY ANALYSIS *
****

EXISTING RUNWAY 14/32

77.19(c) A height exceeding runway primary surface.

********** DOES NOT EXCEED **********

NOT WITHIN SPECIFIED RUNWAY PRIMARY SURFACE

77.19(e) A height exceeding a transitional surface abeam runway.

********** DOES NOT EXCEED **********

NOT WITHIN SPECIFIED RUNWAY ABEAM TRANSITIONAL SURFACE

77.19(d) A height exceeding an approach surface of RUNWAY 32.

THE BEARING TO THE CASE FROM THE THRESHOLD IS..... 193.744 degrees

********** DOES NOT EXCEED **********

OUTSIDE APPROACH ANGULAR CRITERIA FOR THIS RUNWAY.

****
* BEGIN RUNWAY ANALYSIS *
****

PROPOSED RUNWAY 14/32

77.19(c) A height exceeding runway primary surface.

********** DOES NOT EXCEED **********

NOT WITHIN SPECIFIED RUNWAY PRIMARY SURFACE

77.19(e) A height exceeding a transitional surface abeam runway.

********** DOES NOT EXCEED **********

NOT WITHIN SPECIFIED RUNWAY ABEAM TRANSITIONAL SURFACE

77.19(d) A height exceeding an approach surface of RUNWAY 32.

THE BEARING TO THE CASE FROM THE THRESHOLD IS..... 193.648 degrees

********** DOES NOT EXCEED **********

OUTSIDE APPROACH ANGULAR CRITERIA FOR THIS RUNWAY.

****
BEGIN AIRPORT ANALYSIS FOR 28M
****

77.17(a)(2) A height AGL or airport elevation, whichever is higher.

********** DOES NOT EXCEED **********

BECAUSE: Airport does not have a runway longer than 3200 feet.

THE REFERENCE AIRPORT IDENT IS:..... 28M

THE AIRPORT ELEVATION IS:..... 71 ft. AMSL

THE DISTANCE FROM THE CASE TO ARP IS:.. 39.7184 NAUTICAL MILES

THE BEARING AIRPORT TO CASE IS:..... 283.487 DEGREES

THE CASE HEIGHT AGL IS:..... 70 ft.

ALLOWABLE HEIGHT..... 4286 ft. AMSL

77.19 (a) A height exceeding a horizontal surface 150 ft. above airport elevation within a radius of >> 28M <<.

********** DOES NOT EXCEED **********

NOT WITHIN SPECIFIED HORIZONTAL SURFACE AREA

77.19(b) A height exceeding a conical surface (a slope outward 4000 ft. from the horizontal surface at 20/1 ratio).

********** DOES NOT EXCEED **********

NOT WITHIN SPECIFIED CONICAL SURFACE AREA

```
*************************
* BEGIN RUNWAY ANALYSIS *
*************************
```

EXISTING RUNWAY 18/36

77.19(c) A height exceeding runway primary surface.

********** DOES NOT EXCEED **********

NOT WITHIN SPECIFIED RUNWAY PRIMARY SURFACE

77.19(e) A height exceeding a transitional surface abeam runway.

********** DOES NOT EXCEED **********

NOT WITHIN SPECIFIED RUNWAY ABEAM TRANSITIONAL SURFACE

77.19(d) A height exceeding an approach surface of RUNWAY 18.

THE BEARING TO THE CASE FROM THE THRESHOLD IS..... 283.251 degrees

********** DOES NOT EXCEED **********

OUTSIDE APPROACH ANGULAR CRITERIA FOR THIS RUNWAY.

```
*********************************************
       BEGIN AIRPORT ANALYSIS FOR MA6
*********************************************
```

77.17(a)(2) A height AGL or airport elevation, whichever is higher.

********** DOES NOT EXCEED **********

BECAUSE: Location studied is further than 5.99 NM from ARP.

THE REFERENCE AIRPORT IDENT IS:..... MA6

THE AIRPORT ELEVATION IS:..... 52 ft. AMSL

THE DISTANCE FROM THE CASE TO ARP IS:.. 39.7258 NAUTICAL MILES

THE BEARING AIRPORT TO CASE IS:..... 284.844 DEGREES

THE CASE HEIGHT AGL IS:..... 70 ft.

ALLOWABLE HEIGHT..... 4287 ft. AMSL

77.19 (a) A height exceeding a horizontal surface 150 ft. above airport elevation within a radius of >> MA6 <<.

********** DOES NOT EXCEED **********

NOT WITHIN SPECIFIED HORIZONTAL SURFACE AREA

77.19(b) A height exceeding a conical surface (a slope outward 4000 ft. from the horizontal surface at 20/1 ratio).

********** DOES NOT EXCEED **********

NOT WITHIN SPECIFIED CONICAL SURFACE AREA

****
* BEGIN RUNWAY ANALYSIS *
****

EXISTING RUNWAY 10/28

77.19(c) A height exceeding runway primary surface.

********** DOES NOT EXCEED **********

NOT WITHIN SPECIFIED RUNWAY PRIMARY SURFACE

77.19(e) A height exceeding a transitional surface abeam runway.

********** DOES NOT EXCEED **********

NOT WITHIN SPECIFIED RUNWAY ABEAM TRANSITIONAL SURFACE

77.19(d) A height exceeding an approach surface of RUNWAY 10.

THE BEARING TO THE CASE FROM THE THRESHOLD IS..... 284.587 degrees

THE ABEAM BEARING TO THE CENTERLINE IS..... 188.42 degrees

THE CENTERLINE OUTBOUND TRUE BEARING IS..... 278.42 degrees

THE ABEAM DISTANCE TO CENTERLINE FROM CASE IS..... 25375.9 ft.

********** DOES NOT EXCEED **********

CASE MEETS ANGULAR CRITERIA BUT IS LOCATED

GREATER THAN 50,000 ft. FROM THE START OF
ANY APPROACH TYPE, OUT BY 185008.6 feet

****
* BEGIN RUNWAY ANALYSIS *
****

EXISTING RUNWAY 17/35

77.19(c) A height exceeding runway primary surface.

********** DOES NOT EXCEED **********

NOT WITHIN SPECIFIED RUNWAY PRIMARY SURFACE

77.19(e) A height exceeding a transitional surface abeam runway.

********** DOES NOT EXCEED **********

NOT WITHIN SPECIFIED RUNWAY ABEAM TRANSITIONAL SURFACE

77.19(d) A height exceeding an approach surface of RUNWAY 17.

THE BEARING TO THE CASE FROM THE THRESHOLD IS..... 284.452 degrees

********** DOES NOT EXCEED **********

OUTSIDE APPROACH ANGULAR CRITERIA FOR THIS RUNWAY.

****
BEGIN AIRPORT ANALYSIS FOR AFN
****

77.17(a)(2) A height AGL or airport elevation, whichever is higher.

********** DOES NOT EXCEED **********

BECAUSE: Airport does not have a runway longer than 3200 feet.

THE REFERENCE AIRPORT IDENT IS:..... AFN

THE AIRPORT ELEVATION IS:..... 1039 ft. AMSL

THE DISTANCE FROM THE CASE TO ARP IS:.. 39.9861 NAUTICAL MILES

THE BEARING AIRPORT TO CASE IS:..... 160.697 DEGREES

THE CASE HEIGHT AGL IS:..... 70 ft.

ALLOWABLE HEIGHT..... 4937 ft. AMSL

77.19 (a) A height exceeding a horizontal surface 150 ft. above airport elevation within a radius of >> AFN <<.

********** DOES NOT EXCEED **********

NOT WITHIN SPECIFIED HORIZONTAL SURFACE AREA

77.19(b) A height exceeding a conical surface (a slope outward 4000 ft. from the horizontal surface at 20/1 ratio).

********** DOES NOT EXCEED **********

NOT WITHIN SPECIFIED CONICAL SURFACE AREA

****
* BEGIN RUNWAY ANALYSIS *
****

EXISTING RUNWAY 16/34

77.19(c) A height exceeding runway primary surface.

********** DOES NOT EXCEED **********

NOT WITHIN SPECIFIED RUNWAY PRIMARY SURFACE

77.19(e) A height exceeding a transitional surface abeam runway.

********** DOES NOT EXCEED **********

NOT WITHIN SPECIFIED RUNWAY ABEAM TRANSITIONAL SURFACE

77.19(d) A height exceeding an approach surface of RUNWAY 34.

THE BEARING TO THE CASE FROM THE THRESHOLD IS..... 160.789 degrees

THE ABEAM BEARING TO THE CENTERLINE IS..... 238.04 degrees

THE CENTERLINE OUTBOUND TRUE BEARING IS..... 148.04 degrees

THE ABEAM DISTANCE TO CENTERLINE FROM CASE IS..... 52425.9 ft.

********** DOES NOT EXCEED **********

CASE MEETS ANGULAR CRITERIA BUT IS LOCATED
GREATER THAN 50,000 ft. FROM THE START OF
ANY APPROACH TYPE, OUT BY 185407.7 feet

Airspace® Version 17.11.484

AIRSPACE® and TERPS® are registered ® trademarks of Federal Airways & Airspace®
Copyright © 1989 - 2017

01-08-2018
15:39:19

```
*************************************************
*                AIRWAY ANALYSIS                *
*      FAR 77.17(a)(4) (EN ROUTE CRITERIA)      *
*   MINIMUM OBSTACLE CLEARANCE ALTITUDE (MOCA)  *
*         MINIMUM ENROUTE ALTITUDE (MEA)        *
*************************************************
```

Airspace User: Your Name

FILE: 4WL0968A

LATITUDE: 42°-10'-34.31" LONGITUDE: 71°-42'-13.67"

SITE ELEVATION AMSL.....415 ft.
STRUCTURE HEIGHT..... 70 ft.
OVERALL HEIGHT AMSL.....485 ft.

FAR 77.17(a)(4) - EN ROUTE CRITERIA
MINIMUM OBSTACLE CLEARANCE ALTITUDE (MOCA)

LOW ALTITUDE AIRWAY

AIRWAY	SEQUENCE	LATITUDE	LONGITUDE	MEA	LENGTH (NM)
V1	580	42-08-08.87N	071-54-32.47W	4000	13.16
V1	590	42-12-06.79N	071-37-39.64W	4000	

Minimum Obstacle Clearance Altitude (MOCA) is: 2500 AMSL.

Proposed structure is between the above points along Airway V1. The Abeam distance from the course centerline is 0.44 NM. The proposed structure is within the width of the primary area of this airway. The width of the primary area of this airway is 8 NM. The minimum en route altitude (MEA) for this airway segment Is 4000 feet AMSL. Any Height above 1500 feet AMSL will not be approved. Your proposed structure must remain below this value.

Airspace® Version 17.11.484

AIRSPACE® and TERPS® are registered ® trademarks of Federal Airways & Airspace®
Copyright © 1989 - 2017

01-08-2018
15:39:22

The mathematical algorithms used by this program are derived directly from Federal Aviation Regulations Part 77, sub-part C.

```
*********************************************************
*         IFR RUNWAY DEPARTURE SURFACE ANALYSIS         *
*********************************************************
```

FILE: 4WL0968A

LATITUDE: 42°-10'-34.31" LONGITUDE: 71°-42'-13.67"

SITE ELEVATION AMSL.....415 ft.
STRUCTURE HEIGHT..... 70 ft.
OVERALL HEIGHT AMSL.....485 ft.

An airport with at least one instrument approach procedure (IAP) will require all airport runways to be analyzed using 40:1 criteria for Departures. FAA application of the 40:1 screening criteria extendes 22.09 nautical miles and 180° semi-circle area around the Runway centerline extended. Penetration ofthe 40:1 surface will result initially in a determination of presumed hazard(DPH). An extended study is normally required to remove the DPH.

A specified climb gradient (CG) greater than the standard (200 ft/nm) is sometimes necessary to allow acceptable obstacle clearance. Should the proposed location exceed the maximum height you may need to determine if there is a published climb gradient and conduct additional calculations to determine if the climb gradient will provide proper clearance for the proposed structure. Should you require additional assistance please contact Federal Airways & Airspace or another aeronautical consult to perform these calculations.

Ident	Dep Rwy	Elev	Distance	40:1	Max Hgt	CG	Rwy Status
ORH	11	987.9	54576	DNE	Below	DNE	Existing Rwy
ORH	15	997.9	54127	DNE	Below	DNE	Existing Rwy
1B6	36	268.0	57361	DNE	Below	DNE	Existing Rwy
9B1	32	278.3	80385	DNE	Below	DNE	Existing Rwy
60M	19	1042.	81541	DNE	Below	DNE	Existing Rwy
3B3	16	449.4	92749	DNE	Below	DNE	Existing Rwy
3B0	02	699.5	94183	DNE	Below	DNE	Existing Rwy
3B0	10	698.0	93907	DNE	Below	DNE	Existing Rwy
SFZ	05	419.6	107983	DNE	Below	DNE	Existing Rwy
SFZ	33	425.8	108648	DNE	Below	DNE	Existing Rwy
6B6	21	267.0	113948	DNE	Below	DNE	Existing Rwy
6B6	30	266.0	114723	DNE	Below	DNE	Existing Rwy
C44	35	771.5	124410	DNE	Below	DNE	Existing Rwy
8B5	06	589.0	132347	DNE	Below	DNE	Existing Rwy
FIT	20	330.2	136949	DNE	Beyond	DNE	Existing Rwy
FIT	14	328.4	136866	DNE	Beyond	DNE	Existing Rwy
FIT	16	329	136666	DNE	Beyond	DNE	Proposed Rwy
LZD	31	231.4	140354	DNE	Beyond	DNE	Existing Rwy
OWD	28	48.5	142494	DNE	Beyond	DNE	Existing Rwy

OWD	35	49.2	142690	DNE	Beyond	DNE	Existing Rwy
1B9	22	120.0	150452	DNE	Beyond	DNE	Existing Rwy
1B9	32	122.0	150188	DNE	Beyond	DNE	Existing Rwy
1B9	22	117.8	150528	DNE	Beyond	DNE	Proposed Rwy
BED	23	128.0	151889	DNE	Beyond	DNE	Existing Rwy
BED	29	132.6	153334	DNE	Beyond	DNE	Existing Rwy
GDM	18	924.0	158770	DNE	Beyond	DNE	Existing Rwy
PVD	05	44.3	179723	DNE	Beyond	DNE	Existing Rwy
PVD	34	53.7	178050	DNE	Beyond	DNE	Existing Rwy
BOS	22R	13.8	198037	DNE	Beyond	DNE	Existing Rwy
BOS	22L	18.7	197868	DNE	Beyond	DNE	Existing Rwy
BOS	27	16.7	198138	DNE	Beyond	DNE	Existing Rwy
BOS	32	17.0	195590	DNE	Beyond	DNE	Existing Rwy
BOS	33R	15.0	201304	DNE	Beyond	DNE	Existing Rwy
BOS	33L	18.9	199181	DNE	Beyond	DNE	Existing Rwy
BOS	32	17	195590	DNE	Beyond	DNE	Proposed Rwy
IJD	09	239.7	201487	DNE	Beyond	DNE	Existing Rwy
IJD	36	235.3	204257	DNE	Beyond	DNE	Existing Rwy
ORE	19	555.1	211689	DNE	Beyond	DNE	Existing Rwy
ORE	14	551.4	211191	DNE	Beyond	DNE	Existing Rwy
ORE	14	551	211191	DNE	Beyond	DNE	Proposed Rwy
ORE	19	555	211689	DNE	Beyond	DNE	Proposed Rwy
TAN	04	27.0	214881	DNE	Beyond	DNE	Existing Rwy
TAN	30	36.0	216005	DNE	Beyond	DNE	Existing Rwy
1M8	27	65.2	220508	DNE	Beyond	DNE	Existing Rwy
7B9	01	248.3	223769	DNE	Beyond	DNE	Existing Rwy
CEF	05	241.0	222503	DNE	Beyond	DNE	Existing Rwy
CEF	15	240.0	222276	DNE	Beyond	DNE	Existing Rwy
OQU	05	9.3	225990	DNE	Beyond	DNE	Existing Rwy
OQU	34	18.3	220936	DNE	Beyond	DNE	Existing Rwy
ASH	14	192.0	225790	DNE	Beyond	DNE	Existing Rwy
ASH	14	189.8	225920	DNE	Beyond	DNE	Proposed Rwy
28M	36	70.5	240881	DNE	Beyond	DNE	Existing Rwy
MA6	28	55.0	236324	DNE	Beyond	DNE	Existing Rwy
MA6	35	56.0	238562	DNE	Beyond	DNE	Existing Rwy
AFN	16	1013.	241548	DNE	Beyond	DNE	Existing Rwy

AIRSPACE® Version 17.11.484

AIRSPACE® and TERPS® are registered ® trademarks of Federal Airways & Airspace®
Copyright © 1989 - 2017

01-08-2018
15:39:19

```
*************************************
*    NAVAIDS IN PROXIMITY OF CASE    *
*************************************
```

FILE: 4WL0968A

LATITUDE: 42°-10'-34.31" LONGITUDE: 71°-42'-13.67"

SITE ELEVATION AMSL.....415 ft.
STRUCTURE HEIGHT..... 70 ft.
OVERALL HEIGHT AMSL.....485 ft.

FAC IDNT	TYPE	ST AT	FREQ	VECTOR	DIST (ft)	DELTA ELEVA	ST	LOCATION	GRD ANGLE	APCH BEAR
RSR	LOCALIZER	I	110.9	307.17	54220	-500	MA	RWY 11 WORCESTER	-.53	109
ORH	ATCT	Y	A/G	304.92	55073	-605	MA	WORCESTER REGIONA	-.63	
EKW	GLIDE SLOPE	I	330.8	306.59	55535	-502	MA	RWY 29 ORH	-.52	289
ORH	VT	I	108.2	306.58	55553	-501	MA	WORCESTER	-.52	
ORH	RADAR WXL	Y		307.61	57177	-518	MA	WORCESTER	-.52	
RSR	GLIDE SLOPE	I	330.8	303.46	59445	-490	MA	RWY 11 ORH	-.47	109
EKW	LOCALIZER	I	110.9	303.04	61093	-494	MA	RWY 29 WORCESTER	-.46	289
RSR	MK	I	75.0	302.92	61313	-469	MA	RWY 11 WORCESTER	-.44	
PUT	VOR/DME	R	117.4	205.29	89008	-167	CT	PUTNAM	-.11	
SFZ	LOCALIZER	I	111.9	146.71	107850	+71	RI	RWY 05 NORTH CENT	.04	47
FIT	NDB	I	36	353.99	137318	+135	MA	FITCHBURG	.06	
BED	LOM	I		37.48	139580	+285	MA	RWY 11 LAURENCE G	.12	
BE	NDB	I	33	37.49	139601	+285	MA	BEDDS	.12	
LZD	CO	Y	119.12	202.36	140007	+186	CT	DANIELSON	.08	
LZD	VG	P		202.76	140302	+271	CT	Proposed PAPI RY	.11	
LZD	VG	P		201.96	140547	+252	CT	Proposed PAPI RWY	.10	
OWD	LOCALIZER	U	108.3	86.93	142366	+440	MA	RWY 35 NORWOOD ME	.18	350
OWD	ATCT	ON	A/G	88.25	142881	+352	MA	NORWOOD MEMORIAL	.14	
IHM	NDB	D	22	114.85	151372	+320	MA	MANSFIELD	.12	
ULJ	LOCALIZER	I	111.1	44.93	152716	+344	MA	RWY 29 LAURENCE G	.13	293
BED	VT	I	110.0	46.67	153894	+221	MA	BEDFORD	.08	
BED	ATCT	Y	A/G	46.7	153950	+252	MA	BEDFORD ATCT	.09	
BED	GLIDE SLOPE	I	331.5	45.44	154288	+358	MA	RWY 11 BED	.13	113
OW	NDB	I	39	97.7	157390	+435	MA	STOGE	.16	
OWD	LOM	I		97.7	157390	+459	MA	RWY 35 NORWOOD ME	.17	
ULJ	GLIDE SLOPE	I	331.5	46.88	157410	+365	MA	RWY 29 BED	.13	293
BED	LOCALIZER	I	111.1	47.69	158876	+361	MA	RWY 11 LAURENCE G	.13	113
ZBW	CO	Y	A/G	239.34	159617	-695	CT	WOODSTOCK	-.25	
AR	NDB	I	35	144.55	163877	+422	RI	ARMIN	.15	
ARJ	LOM	I		144.55	163880	+412	RI	RWY 23 THEODORE F	.14	
GDM	CO	Y	A/G	324.72	165302	-791	MA	GARDNER	-.27	
GDM	VOR/DME	I	110.6	324.71	165311	-795	MA	GARDNER	-.28	
PVD	RADAR	Y	2735.	170.23	168406	-81	RI	THEODORE FRANCIS	-.03	
KBOX	RADAR WXL	Y		117.74	173597	+261	MA	BOSTON WXL	.09	
SKR	NDB	R	25	54.18	174818	+144	MA	SHAKER HILL	.05	
UNQ	LOCALIZER	I	111.5	155.59	177745	+431	RI	RWY 34 THEODORE F	.14	337

PVD	LOCALIZER	U	109.3	154.51	179248	+438	RI	RWY 05 THEODORE F	.14	47
PVD	VG	Y		155.39	179517	+435	RI	PAPI RWY 16	.14	
PVD	VG	Y		154.86	180123	+441	RI	VASI RWY 23 UW	.14	
PVD	VG	Y		154.99	180386	+440	RI	VASI RWY 23 DW	.14	
ARJ	GLIDE SLOPE	I	332.0	154.93	180587	+440	RI	RWY 23 PVD	.14	227
PVD	VOR/DME	R	115.6	155.72	180730	+436	RI	PROVIDENCE	.14	
PVD	VT	I	108.2	155.53	181338	+430	RI	PROVIDENCE	.14	
PVD	ATCT	ON	A/G	155.55	182379	+351	RI	THEODORE FRANCIS	.11	
PVD	VG	Y		155.25	183025	+448	RI	PAPI RWY 34	.14	
UNQ	GLIDE SLOPE	I	332.9	155.14	183067	+448	RI	RWY 34 PVD	.14	337
PVD	GLIDE SLOPE	I	332.0	156.29	183445	+436	RI	RWY 05 PVD	.14	47
PVD	MK	I	75.0	156.85	184175	+436	RI	RWY 05 THEODORE F	.14	
ARJ	LOCALIZER	I	109.3	156.89	184278	+436	RI	RWY 23 THEODORE F	.14	227
BOS	MK	I	75.0	71.24	197158	+473	MA	RWY 04R GENERAL E	.14	
DGU	LOCALIZER	I	111.3	70.46	197171	+468	MA	RWY 27 GENERAL ED	.14	273
LQN	LOCALIZER	I	110.3	71.07	197621	+470	MA	RWY 22L GENERAL E	.14	216
BOS	ATCT	ON	A/G	69.42	197737	+183	MA	GENERAL EDWARD LA	.05	
BOS	MK	I	75.0	70.97	198078	+468	MA	RWY 04R GENERAL E	.14	
LIP	LOCALIZER	I	110.7	68.14	198604	+469	MA	RWY 33L GENERAL E	.14	331
BOS	RADAR	Y	2820.	71.37	199045	+435	MA	GENERAL EDWARD LA	.13	
BOS	GLIDE SLOPE	I	335.0	70.61	199729	+475	MA	RWY 04R BOS	.14	36
MDC	GLIDE SLOPE	I	330.2	69.04	200267	+474	MA	RWY 15R BOS	.14	150
LQN	GLIDE SLOPE	I	335.0	69.2	202498	+474	MA	RWY 22L BOS	.13	216
MDC	LOCALIZER	I	110.7	70.81	203256	+474	MA	RWY 15R GENERAL E	.13	150
LIP	GLIDE SLOPE	I	330.2	70.82	203426	+474	MA	RWY 33L BOS	.13	331
DGU	GLIDE SLOPE	I	332.3	70.74	204030	+473	MA	RWY 27 BOS	.13	273
BOS	VT	I	111.0	70.92	204102	+470	MA	BOSTON	.13	
BOS	VOR/DME	R	112.7	70.9	204314	+467	MA	BOSTON	.13	
IJD	CO	Y	133,67	219.32	204755	+229	CT	WILLIMANTIC	.06	
IJD	LOCALIZER	I	108.3	219.55	205050	+246	CT	RWY 27 WINDHAM	.07	269
BOS	LOCALIZER	I	110.3	68.34	205567	+467	MA	RWY 04R GENERAL E	.13	36
MEL	CO	Y	A/G	60.55	206769	+210	ME	MELROSE	.06	
ZBW	AR	ON		16.4	212628	+205	NH	NASHUA	.06	
ORE	NDB	D	20	312.46	212635	-60	MA	ORANGE	-.02	
TAN	NDB	R	22	120.62	216606	+456	MA	TAUNTON	.12	
LW	NDB	I	40	38.57	218627	-1675	MA	HAGET	-.44	
LWM	MK	I	75.0	38.57	218627	+355	MA	RWY 05 LAWRENCE M	.09	
GWJ	LOCALIZER	U	109.9	273.12	221893	+246	MA	RWY 05 WESTOVER A	.06	48
OQU	GLIDE SLOPE	I	332.6	159.6	221948	+479	RI	RWY 16 OQU	.12	160
CEF	GLIDE SLOPE	I	333.8	272.56	222530	+251	MA	RWY 23 CEF	.06	228
CEF	VORTAC	R	114.0	272.27	223059	+244	MA	WESTOVER	.06	
LQ	NDB	D	38	63.1	224107	+470	MA	LYNDY	.12	
ASH	LOCALIZER	I	109.7	13.85	225582	+298	NH	RWY 14 BOIRE FIEL	.08	139
CEF	ATCT	ON	A/G	272.15	225688	+110	MA	WESTOVER ARB/METR	.03	
ASH	ATCT	ON	A/G	12.98	225923	+235	NH	BOIRE FIELD	.06	
OQU	ATCT	ON	A/G	159.6	226998	+395	RI	QUONSET STATE	.10	
ASH	GLIDE SLOPE	I	333.2	12.51	227587	+289	NH	RWY 14 ASH	.07	139
GWJ	GLIDE SLOPE	I	333.8	270.94	227865	+255	MA	RWY 05 CEF	.06	48
OQU	LOCALIZER	I	109.5	159.24	228761	+479	RI	RWY 16 QUONSET ST	.12	160
CEF	LOCALIZER	I	109.9	269.61	229431	+252	MA	RWY 23 WESTOVER A	.06	228
AS	NDB	I	35	6.59	237438	+268	NH	CHERN	.06	
ASH	LOM	I		6.59	237438	+268	NH	RWY 14 BOIRE FIEL	.06	

```
ORW  VOR/DME     I   110.0 199.52 239775  +175 CT NORWICH               .04
A90  TR          Y   A/G    13.58 240166  +235 NH BOSTON CONSOLIDAT     .06
```

THE NEAREST AIR NAVIGATION FACILITY TO CASE COORDINATES IS: RSR

Airspace® Version 17.11.484

AIRSPACE® and TERPS® are registered ® trademarks of Federal Airways & Airspace®
Copyright © 1989 - 2017

01-08-2018
15:39:24

```
*******************************************************
*    COMMMUNICATION FACILITIES IN PROXIMITY OF CASE   *
*******************************************************
```

Airspace User: Your Name

FILE: 4WL0968A

LATITUDE: 42°-10'-34.31" LONGITUDE: 71°-42'-13.67"

SITE ELEVATION AMSL.....415 ft.
STRUCTURE HEIGHT..... 70 ft.
OVERALL HEIGHT AMSL.....485 ft.

IDENT	FACILITY	LOCATION NAME	ST	BEARING (deg) Case to FAC	DISTANCE (ft)
ORH	ATCT	WORCESTER REGIONAL	MA	304.9	55043
ORH	NEXRAD	WORCESTER	MA	307.57	57134
ORH	ASOS	WORCESTER	MA	305.5	57201
SFZ	AWOS-3	PAWTUCKET	RI	148.27	109491
FIT	ASOS	FITCHBURG	MA	353.85	138546
LZD	CO	DANIELSON	CT	202.35	140079
OWD	ATCT	NORWOOD MEMORIAL	MA	88.25	142933
BED	ATCT	BEDFORD ATCT	MA	46.73	153957
ZBW	CO	WOODSTOCK	CT	239.33	159620
GDM	CO	GARDNER	MA	324.71	165269
PVD	ASR	THEODORE FRANCIS GREE	RI	170.23	168498
KBOX	NEXRAD	BOSTON WXL	MA	117.74	173613
SKR	RCL	WOBURN	MA	54.22	174525
PVD	ASOS	PROVIDENCE	RI	156.01	181085
PVD	ATCT	THEODORE FRANCIS GREE	RI	155.55	182416
BOS	ATCT	GENERAL EDWARD LAWREN	MA	69.44	197776
BOS	RCL	BOSTON	MA	69.37	197951
BOS	ASR	GENERAL EDWARD LAWREN	MA	71.4	199084
BOS	ASOS	BOSTON	MA	69.82	201130
BOS	EFAS	BOSTON	MA	70.76	203236
IJD	ASOS	WILLIMANTIC	CT	219.3	203915
IJD	CO	WILLIMANTIC	CT	219.31	204721
MEL	CO	MELROSE	ME	60.57	206804
ZBW	RCL	BOSTON (NASHUA(ARTCC)	NH	16.36	212643
QBA	BUEC	WINTHROP	MA	68.45	213311
ORE	ASOS	ORANGE	MA	312.44	213474
QE3	RCL	HUDSON	NH	22.31	220296
CEF	ATCT	WESTOVER ARB/METROPOL	MA	272.15	225628
ASH	ATCT	BOIRE FIELD	NH	12.99	225883
ASH	AWOS-3	NASHUA	NH	12.95	226475
OQU	ATCT	QUONSET STATE	RI	159.59	227089
AFN	ASOS	JAFFREY	NH	340.7	242960

THE NEAREST COMMUNICATION FACILITY TO CASE COORDINATES IS: ORH

Airspace® Version 17.11.484

AIRSPACE® and TERPS® are registered ® trademarks of Federal Airways & Airspace®
Copyright © 1989 - 2017

01-08-2018
15:39:24

```
                    ******************************************
                    *        NOS OBSTRUCTIONS NEAR CASE      *
                    ******************************************
                           Obstacle Search Range = 40000

        Airspace User: Your Name

        FILE: 4WL0968A

        LATITUDE: 42-10-34.31         LONGITUDE: 71-42-13.67

        SITE ELEVATION AMSL......415 ft.
        STRUCTURE HEIGHT......... 70 ft.
        OVERALL HEIGHT AMSL......485 ft.


  TYPE                                                                    A
A M FAA            JULIAN
V OBSTACLE    CITY            ST LATITUDE    LONGITUDE     RANGE DEG QUAN AMSL  AGL  L H
V K NUMBER         DATE    A
- ----------- --------------- -- ----------- ------------  ----- --- ---- ----- ---- - -
- - -------------- ------- -
O TOWER       GRAFTON         MA 42-12-16.00 071-43-02.00  10918 341 1    749   00150R 5
D U 1981ANE00398OE 2014152 C
O TOWER       SUTTON          MA 42-09-57.95 071-44-54.71  12673 253 1    739   00153N 1
A N 2006ANE01497OE 2007154 C
O TOWER       NORTHBRIDGE     MA 42-09-53.45 071-39-31.18  12916 109 1    625   00186N 1
A N 2013ANE00508OE 2013178 C
O STACK       MILLBURY        MA 42-13-16.00 071-46-02.00  23734 314 1    855   00365S 5
D N 1985ANE00003OE 2014152 C
O TOWER       UPTON           MA 42-10-45.80 071-36-53.60  24128  87 1    708   00160N 2
C N 2011ANE01665OE 2011343 A
O TOWER       WORCHESTER      MA 42-13-18.54 071-46-25.85  25233 311 1    881   00267R 2
C M 2007ANE01825OE 2009349 C
O TOWER       WORCESTER       MA 42-13-18.34 071-46-26.25  25242 311 1    889   00290D 5
D N 2006ANE00377OE 2006148 C
O POLE        WORCESTER       MA 42-13-19.40 071-46-26.90  25350 311 1    720   00110N 1
A N 1997ANE00409OE 2010083 C
O TOWER       UPTON           MA 42-13-39.11 071-37-51.72  27179  46 1    717   00094N 1
A N 2012ANE00274OE 2012097 A
U TOWER       PONDVILLE       MA 42-12-21.91 071-48-26.66  30118 291 1    646   00104N 4
D N 2016ANE00732OE 2016224 A
O POLE        WORCESTER       MA 42-13-55.80 071-47-09.00  30168 313 1    559   00101N 1
A N 2012ANE00296OE 2012124 A
U WINDMILL    WORCESTER       MA 42-14-27.32 071-47-02.21  32061 317 1    967   00263W 4
D W 2008ANE00093OE 2014124 C
U TOWER       WORCESTER       MA 42-14-15.00 071-48-29.00  36014 308 1    645   00060U
U                1977147 A
U TOWER       UXBRIDGE        MA 42-04-33.20 071-40-25.60  37450 167 1    715   00194N 4
D N 2006ANE01455OE 2014124 C
```

AIRSPACE® Version 17.11.484

AIRSPACE® and TERPS® are registered ® trademarks of Federal Airways & Airspace®
Copyright © 1989 - 2017

01-08-2018
15:39:25

DEFINITIONS:

The data for each obstacle record is in the following format:

Field	Data Element	Description
1	"O" or "U"	Verification Status "O": verified "U": unverified
2	Obstacle Type	1. Arch 15. Plant 2. Balloon 16. Pole 3. Bridge 17. Rig 4. Bldg 18. Refinery 5. Bldg-Twr 19. Sign 6. Catenary 20. Spire 7. Cool TWR 21. Stack 8. Crane 22. Stacks 9. Crane T 23. Tank 10. Ctrl Twr 24. T-L Twr 11. Dam 25. Tower 12. Dome 26. Towers 13. Elevator 27. Tramway 14. Monument 28. Windmill
3	City Name	City
4	State Identifier	State
5	Latitude	Latitude (NAD 1883)
6	Longitude	Longitude (NAD 1983)
7	Range	Distance from Aeronautical Study to NOS Obstruction (feet)
8	DEG	Bearing from Aeronautical Study to NOS Obstruction (feet)
9	Freq	Charted AM station Frequency
10	AMSL	Above Mean Sea Level Height (Feet)
11	AGL	Above Ground Level Height (Feet)

12	Strobe Indicator	(L)ighting, type of "S": High Intensity White Strobe Lighting "M": Medium Intensity White Strobe Lighting "R": Red Lighting "H": Dual, Red with HIGH Intensit White Strobe "D": Dual, Red with MEDIUM Intensity White Strobe "F": Flood Lights "N": No Lights "L": Other, Lighting not listed above
13, 14	Accuracy H V	A A Horizontal, Vertical Accuracy

HORIZONTAL		VERTICAL	
Code	Tolerance	Code	Tolerance
1	+-15'	A	+-3'
2	+-50'	B	+-10'
3	+-100'	C	+-20'
4	+-250'	D	+-50'
5	+-500'	E	+-125'
6	+-1000'	F	+-250'
7	+-1/2 NM	G	+-500'
8	+-1M	H	+-1000'
9	Unknown	I	Unknown

15	Mark Indicator "Y" or "N"	Painted/Marked Yes or No
16	FAA Study Number or NOS Source Code	NOS Source Code (when FAA study number is not available)

99CF0000	7610 Form
99AM0000	FCC AM List
99FM0000	FCC FM List
99FC0000	Flight Check
99SP0000	Stereoplot
99IP0000	IAP Procedures
99VR0000	Visual Reported
99LR0000	Letter Reported
99TR0000	Telephone Reported
99MS0000	MSAW Reported
99OC####	OC Charts
99HC0000	Horizontal Ctrl Data

17	Action: A, C, D,	Add, Change, Dismantle,
	Julian Date	Date of Action *

* A revision has been made to the Julian date field by NOS in order to comp issues. The numeric, 5-digit field (YYDDD) has changed to an alphanumeric field. The new format has a distinctive letter to indicate Y2K compliance character of the Julian date (jdate) field will be a letter. The remainin will be numeric. The sequence will begin with A0001 = January 1, 2000. It with:

A1001 = January 1, 2001
A2001 = January 1, 2002
A3001 = January 1, 2003

A9001 = January 1, 2009

B0001 = January 1, 2010

```
*****************************************************
*                  AM RADIO STATIONS                *
* Disturbance of AM Broadcast Station Antenna Pattern *
*           CFR Title 47, Part 1, Subpart BB        *
*****************************************************
File: 4WL0968A
```

LATITUDE: 42°-10'-34.31" (NAD83) LONGITUDE: 71°-42'-13.67" (NAD83)

SITE ELEVATION AMSL.....415 ft.
STRUCTURE HEIGHT..... 70 ft.
OVERALL HEIGHT AMSL.....485 ft.

CALL SIGN	FREQ KHz	POWER Watts	ANT MOD	P T	DIST Meters	BEARING Degrees	NAD83 LATITUDE	NAD83 LONGITUDE	CITY	ST
WORC	1310	1,000	D	A	10617	298.63	42°-13'-19	071°-49'-00	WORCESTER	MA
WNEB	1230	1,000	N	T	14553	317.71	42°-16'-23	071°-49'-21	WORCESTER	MA
WMRC	1490	1,000	N	T	16343	105.65	42°-08'-12	071°-30'-48	MILFORD	MA
WGFP	940	1,000	N	T	17186	218.23	42°-03'-17	071°-49'-57	WEBSTER	MA
WGFP	940	4	N	T	17200	218.29	42°-03'-17	071°-49'-58	WEBSTER	MA
WGFP	940	1,000	N	T	17200	218.29	42°-03'-17	071°-49'-58	WEBSTER	MA
WVEI	1440	5,000	D	A	17234	317.07	42°-17'-23	071°-50'-46	WORCESTER	MA

Airspace® Version 17.11.484

AIRSPACE® and TERPS® are registered ® trademarks of Federal Airways & Airspace®
Copyright © 1989 - 2017

01-08-2018
15:39:27

DEFINITIONS:

SIGNIFICANT MODIFICATION: A significant modification of a tower in the immediate vicinity of an AM station is defined in CFR Title 47, Part 1.30002, as follows;
(1) any change that would alter the tower's physical height by 5 electrical degrees or more at the AM frequency; or
(2) in addition or replacement of one or more antennas or trnasmission lines on a tower that has been detuned or base-insulated.

The addition or modification of an antenna or antenna-supporting structure on a building shall be considered a construction modification subject to the analysis and notice requirements of this subpart if and only if the height of the antenna supporting structure alone exceeds the thresholds in paragraphs (a) and (b) of this section.

CALL SIGN: The Call Sign of the station or application. For applications and construction permits which do not have Call Signs a value of 'NEW' is used.

FREQUENCY: in Kilohertz

POWER: The nominal power of the station, as defined in Section CFR 73.14. This is not necessarily the effective radiated power, the transmitter power, the antenna input power, etc.

ANT MOD: Antenna Mode, The mode of the complete antenna system. Indicates directional or non-directional. (D = Directional and N = Non-Directional) If a station is directional at one time during a day and non-directional at another time it is considered to be directional for the purpose of Movement Method Proof. If the same station has multiple locations these are listed as separate AM stations with the same Call Sign.

PT: The type of antenna pattern which has been notified to (or by) foreign countries.

DIST Meters: This is the calculated distance (in meters) between your proposed site and the latitude/longitude coordinates specified by the FCC data.

Bearing Degrees: This is the true bearing from your proposed site to the station.

LATITUDE: This is the latitude of the AM Station in NAD 1983 coordinates.

LONGITUDE: This is the longitude of the AM Station in NAD 1983 coordinates.

ST: This is the state where the AM Station is located.

The material in this report on AM radio stations was obtained from the FCC who provided the data on an 'as-is' basis. Therefore, Federal Airways & Airspace® disclaims all warranties with regard to the contents of these files, including their fitness for your use. In no event shall Federal Airways & Airspace® be liable for any special, indirect, or consequential damages whatsoever resulting from loss or use, data or profits, whether in connection with the use or performance of the contents of these files, action of contract, negligence, or other action arising out of, or in connection with the use of the contents of these files. Data conversion of the FCC data from NAD27 to NAD83 was accomplished using the USGS NADCON210 software program.

```
*****************************************
*    FCC REGISTERED ANTENNA STRUCTURES    *
*****************************************
ASR Search Range = 40000
```

FILE: 4WL0968A

LATITUDE: 42°-10'-34.31" LONGITUDE: 71°-42'-13.67"

SITE ELEVATION AMSL.....415 ft.
STRUCTURE HEIGHT..... 70 ft.
OVERALL HEIGHT AMSL.....485 ft.

STRUCTURE	REGISTER	FILE NUM	FAA STUDY NUMBER	LATITUDE	LONGITUDE	GROUND	AGL	AMSL	DIST	DIR
TOWER	1013602	A0857052	96-ANE-554-OE	42-12-18.99	071-43-00.00	165.0	44	211.7	11156	342
TOWER	1200286	A0479423	2003-ANE-1007-OE	42-09-56.99	071-44-52.99	175.0	45	225.3	12578	253
TOWER	1206961	A0187490	76-NE-102-OE	42-12-42.30	071-41-17.19	42.6	67	109.6	13636	18
TOWER	1261654	A0590530	2007-ANE-67-OE	42-12-04.30	071-39-38.51	125.8	30	156.2	14813	52
TOWER	1234321	A0834519	00-ANE-0362-OE	42-07-42.29	071-41-58.01	126.1	57	186.7	17453	176
TOWER	1227662	A0837408	2005-ANE-1140-OE	42-11-38.90	071-46-12.70	122.8	51	174.6	19148	290
TOWER	1061824	A0470534	97-ANE-0429-OE	42-13-42.99	071-41-24.99	146.0	26	172.0	19449	11
TOWER	1061830	A0470536	97-ANE-0472-OE	42-13-35.99	071-39-49.99	161.5	31	192.5	21336	30
TOWER	1280642	A0757900	2011-ANE-1665-OE	42-10-45.79	071-36-53.58	167.0	42	215.7	24130	87
POLE	1222779	A1011300	2009-ANE-685-OE	42-13-48.79	071-45-23.29	140.2	30	173.4	24316	324
TOWER	1013601	A0710553	96-ANE-553-OE	42-07-59.00	071-38-04.99	113.2	44	157.5	24455	130
LTOWER	1004125	A1079246	2007-ANE-1825-OE	42-13-18.50	071-46-25.91	187.1	76	265.8	25234	311
TOWER	1023103	A1012049	2009-ANE-767-OE	42-13-18.29	071-46-26.29	182.6	85	271.0	25242	311
TOWER	1061827	A0471557	97-ANE-0409-OE	42-13-18.99	071-46-27.01	188.0	33	221.5	25329	311
MTOWER	1297755	A0984784	2015-ANE-1706-OE	42-13-19.40	071-46-27.01	188.7	45	235.9	25356	311
TOWER	1208748	A0217699	99-ANE-0564-OE	42-06-18.90	071-42-02.79	115.8	54	173.7	25867	178
TOWER	1222163	A0837293	2005-ANE-1182-OE	42-06-13.49	071-42-13.41	115.2	57	173.7	26402	180

TOWER	1005251	A0819269	2012-ANE-274-OE	42-13-39.09	071-37-51.69	189.9	26	218.5	27179	46
TOWER	1005250	A0819267	2007-ANE-1632-OE	42-15-30.59	071-42-29.10	163.4	58	224.1	30015	358
MTOWER	1223274	A1033391	2016-ANE-732-OE	42-12-21.90	071-48-26.70	165.2	30	196.9	30121	291
POLE	1284112	A1026652	2012-ANE-296-OE	42-13-55.79	071-47-09.00	139.6	30	170.4	30168	313
MTOWER	1301936	A1065793	2016-ANE-3331-OE	42-07-11.19	071-48-30.58	255.0	46	304.0	35056	234
TOWER	1223276	A0837322	2005-ANE-1181-OE	42-16-31.40	071-43-03.10	170.1	45	222.2	36339	354
BTWR	1006000	A1034372	95-ANE-391-OE	42-15-45.59	071-47-57.78	146.3	98	244.3	40785	321
B	1007179	A0008564		42-15-46.00	071-47-58.99	218.1	85	308.0	40875	321
POLE	1061825	A0336959	98-ANE-0296-OE	42-16-08.00	071-36-38.00	90.0	23	113.0	42178	37
POLE	1260539	A1023673	2006-ANE-883-OE	42-16-09.09	071-36-37.40	89.6	22	112.5	42293	37

Airspace® Version 17.11.484

AIRSPACE® and TERPS® are registered ® trademarks of Federal Airways & Airspace®
Copyright © 1989 - 2017

01-08-2018
15:39:28

APPENDIX D:
FCC TOWAIR

TOWAIR Determination Results

*** NOTICE ***

TOWAIR's findings are not definitive or binding, and we cannot guarantee that the data in TOWAIR are fully current and accurate. In some instances, TOWAIR may yield results that differ from application of the criteria set out in 47 C.F.R. Section 17.7 and 14 C.F.R. Section 77.13. A positive finding by TOWAIR recommending notification should be given considerable weight. On the other hand, a finding by TOWAIR recommending either for or against notification is not conclusive. It is the responsibility of each ASR participant to exercise due diligence to determine if it must coordinate its structure with the FAA. TOWAIR is only one tool designed to assist ASR participants in exercising this due diligence, and further investigation may be necessary to determine if FAA coordination is appropriate.

DETERMINATION Results

Structure does not require registration. The structure meets the 6.10-meter (20-foot) Rule criteria.

Your Specifications

NAD83 Coordinates	
Latitude	42-10-34.3 north
Longitude	071-42-13.7 west
Measurements (Meters)	
Overall Structure Height (AGL)	21.3
Support Structure Height (AGL)	16.8
Site Elevation (AMSL)	126.5
Structure Type	
TANK - Any type of Tank (Water, Gas, etc)	

Tower Construction Notifications
Notify Tribes and Historic Preservation Officers of your plans to build a tower.

CLOSE WINDOW

APPENDIX E:
Existing FAA/FCC ASR Documentation

« OE/AAA

Circle Search for Cases Results

No records found.

Back

ASR Registration Search

Registration Search Results

Displayed Results

No matches found

PA = Pending Application(s)

To try again, you can perform a new search or refine your existing search.

Specified Search

Latitude=**'42-10-34.3 N'**, Longitude=**'71-42-13.6 W'**, Radius=**1 Kilometers**

CLOSE WINDOW