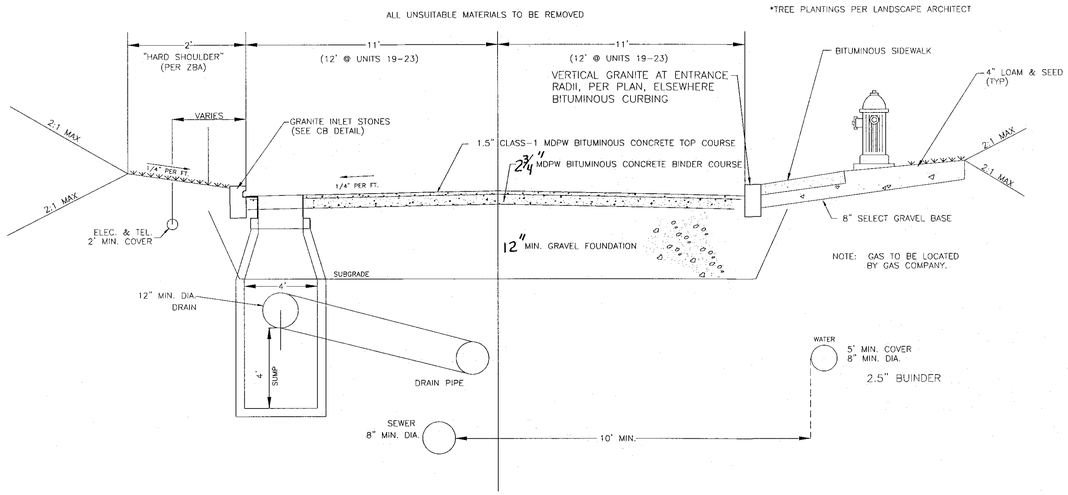

NOTE-THIS PROJECT IS SUBJECT TO A COMPREHENSIVE PERMIT UNDER G.L. c 40B S-20-23. THE ROADS AND WAYS WITHIN THE PROJECT MAY OR MAY NOT CONFORM TO THE STANDARDS AND REQUIREMENTS OF THE PLANNING BOARD'S SUBDIVISION RULES.

ROAD/DRIVE CROSS SECTION N.T.S.

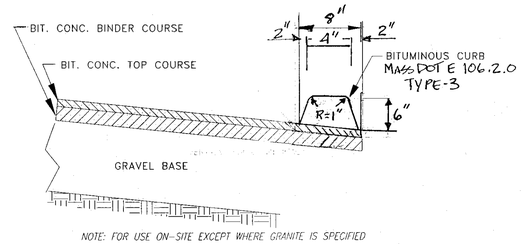

NOTE: FOR USE ON-SITE EXCEPT WHERE GRANITE IS SPECIFIED

BITUMINOUS CURB DETAIL N.T.S.

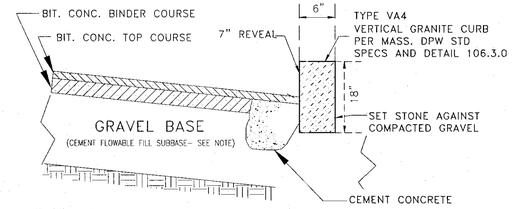

NOTE: SEE PAVEMENT DETAIL FOR RTE-122 WORK WHICH INCLUDES FLOWABLE FILL FOR THE ENTIRE SEWER TRENCH (UP TO 4' EAST OF THE SEWER)

VERTICAL GRANITE CURB N.T.S.

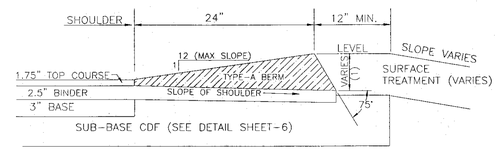

(1) DIMENSION VARIES WITH THE THICKNESS OF THE TOP COURSE AND SLOPE OF THE BINDER.

TYPE-A BITUMINOUS BERM DETAIL N.T.S.

NOTE: FOR USE ON ROUTE-122 (TO REPLACE BERM REMOVED FOR UTILITY WORK)

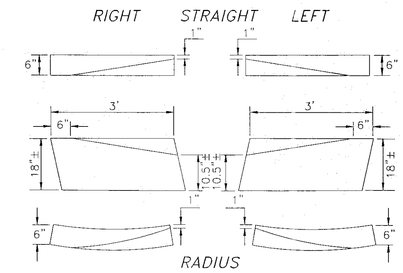

NOTE: SEE WILLIAMS STONE CO. INC. VA-4, 6"X18" TO BIT. TRANSITION DETAILS

GRANITE VERTICAL TO BIT. BERM TRANSITION CURB N.T.S.

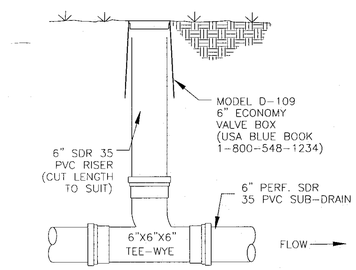

NOTE: CLEANOUTS REQUIRED AT 150' O.C.

SUB-DRAIN CLEANOUT DETAIL NTS

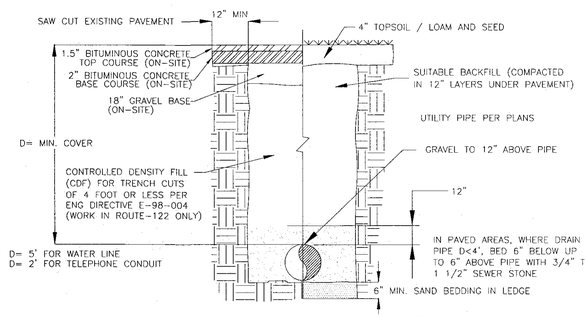

SEE ROUTE-122 PAVEMENT DETAIL FOR TYPICAL SECTION IN RTE-122 (OFF-SITE PLAN/PROFILE SHT)

NOTE: ADD CONCRETE THRUST BLOCKS FOR WATER MAIN & SEWER FORCE MAIN BENDS/TEES, ETC.

TYPICAL TRENCH SECTION (N.T.S.)

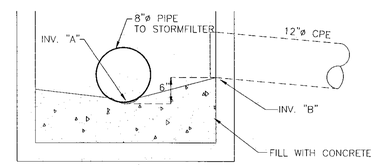

SECTION A-A NTS

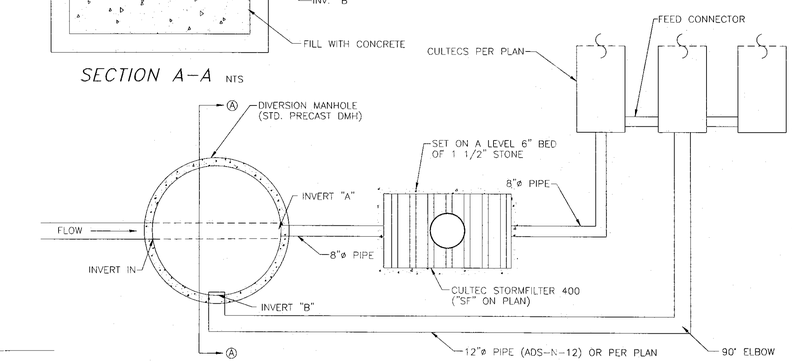

DIVERSION MANHOLE/STORMFILTER DETAIL NTS

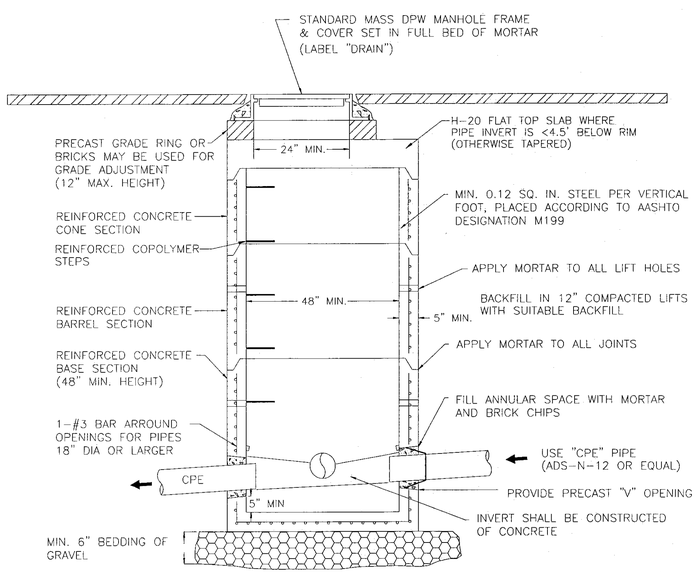

DRAIN MANHOLE N.T.S.

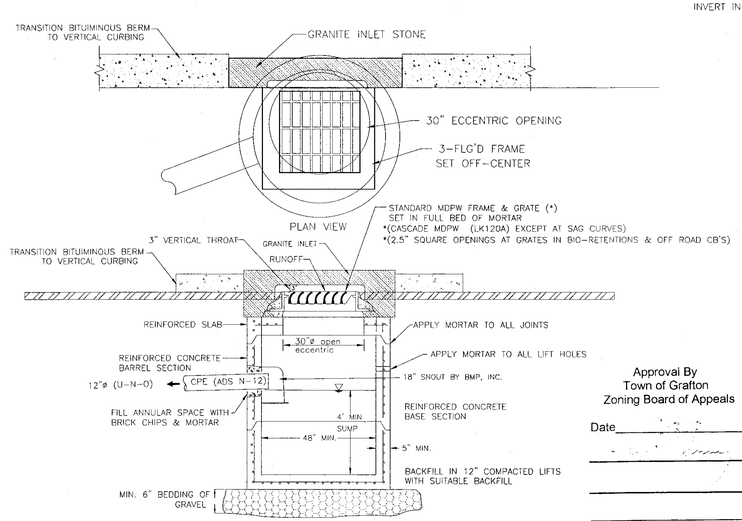

CATCH BASIN N.T.S.

Approval By
Town of Grafton
Zoning Board of Appeals

Date_____

(Ref. Comprehensive Permit WDRD Bk.46010 pgs.1-37)

GENERAL NOTES

1) Place 4" of loam and seed in all disturbed areas of the project not otherwise improved (eg. paved, rip-rapped,etc.).

2) Project may be serviced with gas. See gas company for requirements.

3) See Mass Electric/N-grid for requirements related to underground power.

4) A separate stormwater maintenance plan is part of the project requirements. The owners & association shall perform inspections & maintenance and document such, per State & Federal requirements.

5) Retaining walls up to 4 feet in height shall be gravity type walls such as Mass DPW STD 302.2.0. Walls over 4 feet in height shall be properly fenced and designed, inspected and certified by a Registered Structurcl Engineer. Wall designs should be submitted to the Town of Grafton for review.

6) Final grading shall be such that runoff is directed away from building foundations. Grading near buildings shall comply with the Massachusetts State Building Code 780 CMR.

7) All underground work shall be coordinated with DIG-SAFE, prior to digging.

8) Materials, Specifications and Procedures shall comply with Massachusetts DPW Construction Standards and Mass Highway and Bridge Specifications unless noted otherwise on plans.

9) Wheel chair ramps shall be provided at all crossings. Ramps shall comply with Mass DPW Standard 107 plus any other requirements of the Mass Architectural Access Board (AAB). Consult with Grafton ADA Coordinator prior to construction.

REV: 8/1/12 FOR ZBA SIGNATURE

REV. 4/12/12: ADDED TYPE-A BERM DETAIL & REVISED SITE CURB DETAIL PER MASSDOT

GRAZ Engineering, LLC
323 WEST LAKE ROAD. FITZWILLIAM, NH 03447
TEL.: (603) 585-6959 FAX: (603) 585-6960

PROVIDENCE ROAD COMMONS; 195 PROVIDENCE ROAD
40B SITE PLAN- MISCELLANEOUS DETAILS
PREPARED FOR: PROVIDENCE ROAD COMMONS, LLC
43 CORTLAND WAY; GRAFTON, MASSACHUSETTS

Scale: AS NOTED
Drawn By: PFG
Date: OCTOBER 22, 2010
Revised: JANUARY 10, 2012
MARCH 20, 2012
APRIL 12, 2012

COMMONWEALTH OF MASSACHUSETTS GRADY R. GRAZ No. 35306 CIVIL REGISTERED PROFESSIONAL ENGINEER

DRAWING SET
SHEET 8 OF 12