PAUL J. FORD & COMPANY

Date: **August 12, 2018**

Andrew Bazinet
Crown Castle
3 Corporate Park Drive Suite 101
Clifton Park, NY 12065

Paul J. Ford & Company
250 E. Broad St., Suite 600
Columbus, OH 43215
(614) 221-6679

Subject: Structural Analysis Report

Carrier Designation:	***Sprint PCS* Co-Locate**	
	Carrier Site Number:	BS23XC374
	Carrier Site Name:	BS23XC374
Crown Castle Designation:	**Crown Castle BU Number:**	875060
	Crown Castle Site Name:	TUFTS
	Crown Castle JDE Job Number:	468088
	Crown Castle Work Order Number:	1601609
	Crown Castle Order Number:	413053 Rev. 4
Engineering Firm Designation:	**Paul J. Ford & Company Project Number:**	37518-2758.001.7805
Site Data:	**200 Westboro Rd, Grafton, Worcester County, MA**	
	Latitude *42° 14' 40.63"*, Longitude *-71° 40' 40.32"*	
	99 Foot - Monopole Tower	

Dear Andrew Bazinet,

Paul J. Ford & Company is pleased to submit this **"Structural Analysis Report"** to determine the structural integrity of the above mentioned tower. This analysis has been performed in accordance with the Crown Castle Structural 'Statement of Work' and the terms of Crown Castle Purchase Order Number 1232903, in accordance with order 413053, revision 4.

The purpose of the analysis is to determine acceptability of the tower stress level. Based on our analysis we have determined the tower stress level for the structure and foundation, under the following load case, to be:

LC5: Existing + Proposed Equipment **Sufficient Capacity**
Note: See Table I and Table II for the proposed and existing loading, respectively.

This analysis has been performed in accordance with the 2015 International Building Code as amended by the Massachusetts State Building Code, Ninth Edition, based upon an ultimate 3-second gust wind speed of 126 mph converted to a nominal 3-second gust wind speed of 98 mph per section 1609.3.1 as required for use in the ANSI/TIA-222-G-2005 Standard, "Structural Standard for Antenna Supporting Structures and Antennas", with ANSI/TIA-222-G-1-2007 and ANSI/TIA-222-G-2-2009 Addenda per Exception #5 of Section 1609.1.1. Risk Category II, Exposure Category C and Topographic Category 1 with a maximum Topographic Factor, Kzt, of 1.0 were used in this analysis.

We at *Paul J. Ford & Company* appreciate the opportunity of providing our continuing professional services to you and Crown Castle. If you have any questions or need further assistance on this or any other projects please give us a call.

Respectfully submitted by:

David Jack, E.I.
Structural Designer

COMMONWEALTH OF MASSACHUSETTS
RICHARD W. HOFFMAN
STRUCTURAL
No. 42531
REGISTERED PROFESSIONAL ENGINEER

8/13/18

tnxTower Report - version 8.0.2.1

TABLE OF CONTENTS

1) INTRODUCTION

2) ANALYSIS CRITERIA
- Table 1 - Proposed Antenna and Cable Information
- Table 2 - Existing Antenna and Cable Information
- Table 3 - Design Antenna and Cable Information

3) ANALYSIS PROCEDURE
- Table 4 - Documents Provided
- 3.1) Analysis Method
- 3.2) Assumptions

4) ANALYSIS RESULTS
- Table 5 - Section Capacity (Summary)
- Table 6 – Tower Components vs. Capacity
- 4.1) Recommendations

5) APPENDIX A
- tnxTower Output

6) APPENDIX B
- Base Level Drawing

7) APPENDIX C
- Additional Calculations

1) INTRODUCTION

This tower is a 99 ft Monopole tower designed by ENGINEERED ENDEAVORS, INC. in October of 2002. The tower was originally designed for a wind speed of 90 mph per TIA/EIA-222-F.

2) ANALYSIS CRITERIA

This analysis has been performed in accordance with the 2015 International Building Code as amended by the Massachusetts State Building Code, Ninth Edition, based upon an ultimate 3-second gust wind speed of 126 mph converted to a nominal 3-second gust wind speed of 98 mph per section 1609.3.1 as required for use in the ANSI/TIA-222-G-2005 Standard, “Structural Standard for Antenna Supporting Structures and Antennas”, with ANSI/TIA-222-G-1-2007 and ANSI/TIA-222-G-2-2009 Addenda per Exception #5 of Section 1609.1.1. Risk Category II, Exposure Category C and Topographic Category 1 with a maximum Topographic Factor, Kzt, of 1.0 were used in this analysis.

Table 1 - Proposed Antenna and Cable Information

Mounting Level (ft)	Center Line Elevation (ft)	Number of Antennas	Antenna Manufacturer	Antenna Model	Number of Feed Lines	Feed Line Size (in)	Note
94.0	95.0	3	commscope	DHHTT65B-3XR w/ Mount Pipe	12	7/8	---
	91.0	6	rfs celwave	FD9R6004/1C-3L			

Table 2 - Existing Antenna and Cable Information

Mounting Level (ft)	Center Line Elevation (ft)	Number of Antennas	Antenna Manufacturer	Antenna Model	Number of Feed Lines	Feed Line Size (in)	Note
94.0	94.0	3	decibel	932DG90T2E-M w/ Mount Pipe	1 6	1/2 1-1/4	2
84.0	84.0	3	jma wireless	X7CQAP-665-VR0 w/ Mount Pipe	12 3	7/8 516	1
74.0	75.0	3	rfs celwave	APX16DWV-16DWV-S-E-A20 w/ Mount Pipe	12 1	7/8 5/16	1
		3	andrew	E15S08P80			
		3	commscope	E15S09P45			
69.0	70.0	1	lucent	KS24019-L112A	1	1/2	1
	69.0	1	tower mounts	Side Arm Mount [SO 701-1]			

Notes:
1) Existing Equipment
2) Equipment To Be Removed

Table 3 - Design Antenna and Cable Information

Mounting Level (ft)	Center Line Elevation (ft)	Number of Antennas	Antenna Manufacturer	Antenna Model	Number of Feed Lines	Feed Line Size (in)
---	---	---	---	---	---	---

3) ANALYSIS PROCEDURE

Table 4 - Documents Provided

Document	Remarks	Reference	Source
4-GEOTECHNICAL REPORTS	Geisser Engineering Corp., R-914,06/06/2003	1516303	CCISITES
4-POST-MODIFICATION INSPECTION	Crown Castle, 1377853, 08/04/2017	6998562	CCISITES
4-TOWER FOUNDATION DRAWINGS/DESIGN/SPECS	EEI, 11180, 9/27/2002	1431465	CCISITES
4-TOWER MANUFACTURER DRAWINGS	EEI, 11180, 9/27/2002	1515383	CCISITES

3.1) Analysis Method

tnxTower (version 8.0.2.1), a commercially available analysis software package, was used to create a three-dimensional model of the tower and calculate member stresses for various loading cases. Selected output from the analysis is included in Appendix A.

3.2) Assumptions

1) Tower and structures were built in accordance with the manufacturer's specifications.
2) The tower and structures have been maintained in accordance with the manufacturer's specification.
3) The configuration of antennas, transmission cables, mounts and other appurtenances are as specified in Tables 1 and 2 and the referenced drawings.
4) The monopole was modified in conformance with the referenced modification drawings.

This analysis may be affected if any assumptions are not valid or have been made in error. Paul J. Ford & Company should be notified to determine the effect on the structural integrity of the tower.

4) ANALYSIS RESULTS

Table 5 - Section Capacity (Summary)

Section No.	Elevation (ft)	Component Type	Size	Critical Element	P (K)	SF*P_allow (K)	% Capacity	Pass / Fail
L1	99 - 89	Pole	TP4.5x4.5x0.237	1	-0.53	99.98	47.7	Pass
L2	89 - 79	Pole	TP4.5x4x2	2	-1.75	706.86	36.6	Pass
L3	79 - 69	Pole	TP5x5x2.5	3	-3.41	883.57	58.1	Pass
L4	69 - 45.21	Pole	TP24.43x19x0.3125	4	-5.80	1717.04	14.4	Pass
L5	45.21 - 0	Pole	TP34x22.9879x0.3125	5	-12.42	2434.31	23.1	Pass
							Summary	
						Pole (L3)	58.1	Pass
						RATING =	**58.1**	Pass

Table 6 - Tower Component Stresses vs. Capacity

Notes	Component	Elevation (ft)	% Capacity	Pass / Fail
1	Anchor Rods	0	22.1	Pass
1	Base Plate	0	33.1	Pass
1	Base Foundation	0	22.2	Pass
1	Base Foundation Soil Interaction	0	31.3	Pass
1	Flange Connection	69	90.6	Pass

Structure Rating (max from all components) =	90.6%

Notes:
1) See additional documentation in “Appendix C – Additional Calculations” for calculations supporting the % capacity consumed.

4.1) Recommendations

The monopole and its foundation have sufficient capacity to carry the proposed loading configuration. No modifications are required at this time.

APPENDIX A

TNXTOWER OUTPUT

Tower Input Data

The tower is a monopole.
This tower is designed using the TIA-222-G standard.
The following design criteria apply:

1) Tower is located in Worcester County, Massachusetts.
2) ASCE 7-10 Wind Data is used (wind speeds converted to nominal values).
3) Basic wind speed of 98 mph.
4) Structure Class II.
5) Exposure Category C.
6) Topographic Category 1.
7) Crest Height 0.0000 ft.
8) Nominal ice thickness of 1.0000 in.
9) Ice thickness is considered to increase with height.
10) Ice density of 56.00 pcf.
11) A wind speed of 40 mph is used in combination with ice.
12) Temperature drop of 50 °F.
13) Deflections calculated using a wind speed of 60 mph.
14) A non-linear (P-delta) analysis was used.
15) Pressures are calculated at each section.
16) Stress ratio used in pole design is 1.
17) Local bending stresses due to climbing loads, feed line supports, and appurtenance mounts are not considered.

Options

	Consider Moments - Legs		Distribute Leg Loads As Uniform		Use ASCE 10 X-Brace Ly Rules
	Consider Moments - Horizontals		Assume Legs Pinned		Calculate Redundant Bracing Forces
	Consider Moments - Diagonals	√	Assume Rigid Index Plate		Ignore Redundant Members in FEA
	Use Moment Magnification	√	Use Clear Spans For Wind Area		SR Leg Bolts Resist Compression
√	Use Code Stress Ratios		Use Clear Spans For KL/r		All Leg Panels Have Same Allowable
√	Use Code Safety Factors - Guys		Retension Guys To Initial Tension		Offset Girt At Foundation
	Escalate Ice	√	Bypass Mast Stability Checks	√	Consider Feed Line Torque
	Always Use Max Kz	√	Use Azimuth Dish Coefficients		Include Angle Block Shear Check
	Use Special Wind Profile	√	Project Wind Area of Appurt.		Use TIA-222-G Bracing Resist. Exemption
	Include Bolts In Member Capacity		Autocalc Torque Arm Areas		Use TIA-222-G Tension Splice Exemption
	Leg Bolts Are At Top Of Section		Add IBC .6D+W Combination		Poles
	Secondary Horizontal Braces Leg		Sort Capacity Reports By Component	√	Include Shear-Torsion Interaction
	Use Diamond Inner Bracing (4 Sided)		Triangulate Diamond Inner Bracing		Always Use Sub-Critical Flow
	SR Members Have Cut Ends		Treat Feed Line Bundles As Cylinder		Use Top Mounted Sockets
	SR Members Are Concentric				Pole Without Linear Attachments
					Pole With Shroud Or No Appurtenances
					Outside and Inside Corner Radii Are Known

Tapered Pole Section Geometry

Section	*Elevation* *ft*	*Section Length* *ft*	*Splice Length* *ft*	*Number of Sides*	*Top Diameter* *in*	*Bottom Diameter* *in*	*Wall Thickness* *in*	*Bend Radius* *in*	*Pole Grade*
L1	99.0000-89.0000	10.0000	0.00	Round	4.5000	4.5000	0.2370		A53-B-35 (35 ksi)
L2	89.0000-79.0000	10.0000	0.00	Round	4.0000	4.5000	2.0000		A572-50 (50 ksi)
L3	79.0000-	10.0000	0.00	Round	5.0000	5.0000	2.5000		A572-50

Section	Elevation ft	Section Length ft	Splice Length ft	Number of Sides	Top Diameter in	Bottom Diameter in	Wall Thickness in	Bend Radius in	Pole Grade
	69.0000								(50 ksi)
L4	69.0000-45.2100	23.7900	3.58	18	19.0000	24.4300	0.3125	1.2500	A572-65 (65 ksi)
L5	45.2100-0.0000	48.7900		18	22.9879	34.0000	0.3125	1.2500	A572-65 (65 ksi)

Tapered Pole Properties

Section	Tip Dia. in	Area in^2	I in^4	r in	C in	I/C in^3	J in^4	It/Q in^2	w in	w/t
L1	4.5000	3.1740	7.2326	1.5095	2.2500	3.2145	14.4652	1.5861	0.0000	0
	4.5000	3.1740	7.2326	1.5095	2.2500	3.2145	14.4652	1.5861	0.0000	0
L2	4.0000	12.5664	12.5664	1.0000	2.0000	6.2832	25.1327	6.2794	0.0000	0
	4.5000	15.7080	20.1258	1.1319	2.2500	8.9448	40.2517	7.8493	0.0000	0
L3	5.0000	19.6350	30.6796	1.2500	2.5000	12.2718	61.3592	9.8116	0.0000	0
	5.0000	19.6350	30.6796	1.2500	2.5000	12.2718	61.3592	9.8116	0.0000	0
L4	19.2449	18.5357	817.8017	6.6341	9.6520	84.7287	1636.6795	9.2696	2.7940	8.941
	24.7587	23.9215	1757.8882	8.5617	12.4104	141.6459	3518.0895	11.9630	3.7497	11.999
L5	24.1148	22.4911	1461.0256	8.0498	11.6778	125.1109	2923.9737	11.2477	3.4959	11.187
	34.4763	33.4138	4790.7195	11.9591	17.2720	277.3691	9587.7427	16.7101	5.4340	17.389

Tower Elevation ft	Gusset Area (per face) ft^2	Gusset Thickness in	Gusset Grade	Adjust. Factor A_f	Adjust. Factor A_r	Weight Mult.	Double Angle Stitch Bolt Spacing Diagonals in	Double Angle Stitch Bolt Spacing Horizontals in	Double Angle Stitch Bolt Spacing Redundants in
L1 99.0000-89.0000				1	0	1			
L2 89.0000-79.0000				1	0	1			
L3 79.0000-69.0000				1	0	1			
L4 69.0000-45.2100				1	1	1			
L5 45.2100-0.0000				1	1	1			

Feed Line/Linear Appurtenances - Entered As Round Or Flat

Description	Face or Leg	Allow Shield	Component Type	Placement ft	Total Number	Number Per Row	Clear Spacing in	Width or Diameter in	Perimeter in	Weight plf
***										

Feed Line/Linear Appurtenances - Entered As Area

Description	Face or Leg	Allow Shield	Component Type	Placement ft	Total Number		C_AA_A ft^2/ft	Weight plf
LCF78-50JA-A7(7/8)	C	No	Inside Pole	94.0000 - 0.0000	12	No Ice	0.0000	0.29
						1/2" Ice	0.0000	0.29
						1" Ice	0.0000	0.29
***								
LDF5-50A(7/8)	C	No	Inside Pole	84.0000 - 0.0000	12	No Ice	0.0000	0.33
						1/2" Ice	0.0000	0.33
						1" Ice	0.0000	0.33

Description	Face or Leg	Allow Shield	Component Type	Placement ft	Total Number		C_AA_A ft^2/ft	Weight plf
ATCB-B01-XXX(5/16)	C	No	Inside Pole	84.0000 - 0.0000	3	No Ice	0.0000	0.06
						1/2" Ice	0.0000	0.06
						1" Ice	0.0000	0.06
***								
***								
LDF4-50A(1/2)	C	No	Inside Pole	69.0000 - 0.0000	1	No Ice	0.0000	0.15
						1/2" Ice	0.0000	0.15
						1" Ice	0.0000	0.15
ATCB-B01-003(5/16)	C	No	Inside Pole	74.0000 - 0.0000	1	No Ice	0.0000	0.07
						1/2" Ice	0.0000	0.07
						1" Ice	0.0000	0.07
FXL 780 PE(7/8)	C	No	Inside Pole	74.0000 - 0.0000	12	No Ice	0.0000	0.25
						1/2" Ice	0.0000	0.25
						1" Ice	0.0000	0.25

Feed Line/Linear Appurtenances Section Areas

Tower Section	Tower Elevation ft	Face	A_R ft^2	A_F ft^2	C_AA_A In Face ft^2	C_AA_A Out Face ft^2	Weight K
L1	99.0000-89.0000	A	0.000	0.000	0.000	0.000	0.00
		B	0.000	0.000	0.000	0.000	0.00
		C	0.000	0.000	0.000	0.000	0.02
L2	89.0000-79.0000	A	0.000	0.000	0.000	0.000	0.00
		B	0.000	0.000	0.000	0.000	0.00
		C	0.000	0.000	0.000	0.000	0.06
L3	79.0000-69.0000	A	0.000	0.000	0.000	0.000	0.00
		B	0.000	0.000	0.000	0.000	0.00
		C	0.000	0.000	0.000	0.000	0.09
L4	69.0000-45.2100	A	0.000	0.000	0.000	0.000	0.00
		B	0.000	0.000	0.000	0.000	0.00
		C	0.000	0.000	0.000	0.000	0.26
L5	45.2100-0.0000	A	0.000	0.000	0.000	0.000	0.00
		B	0.000	0.000	0.000	0.000	0.00
		C	0.000	0.000	0.000	0.000	0.49

Feed Line/Linear Appurtenances Section Areas - With Ice

Tower Section	Tower Elevation ft	Face or Leg	Ice Thickness in	A_R ft^2	A_F ft^2	C_AA_A In Face ft^2	C_AA_A Out Face ft^2	Weight K
L1	99.0000-89.0000	A	2.221	0.000	0.000	0.000	0.000	0.00
		B		0.000	0.000	0.000	0.000	0.00
		C		0.000	0.000	0.000	0.000	0.02
L2	89.0000-79.0000	A	2.196	0.000	0.000	0.000	0.000	0.00
		B		0.000	0.000	0.000	0.000	0.00
		C		0.000	0.000	0.000	0.000	0.06
L3	79.0000-69.0000	A	2.168	0.000	0.000	0.000	0.000	0.00
		B		0.000	0.000	0.000	0.000	0.00
		C		0.000	0.000	0.000	0.000	0.09
L4	69.0000-45.2100	A	2.111	0.000	0.000	0.000	0.000	0.00
		B		0.000	0.000	0.000	0.000	0.00
		C		0.000	0.000	0.000	0.000	0.26
L5	45.2100-0.0000	A	1.922	0.000	0.000	0.000	0.000	0.00
		B		0.000	0.000	0.000	0.000	0.00
		C		0.000	0.000	0.000	0.000	0.49

Feed Line Center of Pressure

Section	Elevation ft	CP_X in	CP_Z in	CP_X Ice in	CP_Z Ice in
L1	99.0000-89.0000	0.0000	0.0000	0.0000	0.0000
L2	89.0000-79.0000	0.0000	0.0000	0.0000	0.0000
L3	79.0000-69.0000	0.0000	0.0000	0.0000	0.0000
L4	69.0000-45.2100	0.0000	0.0000	0.0000	0.0000
L5	45.2100-0.0000	0.0000	0.0000	0.0000	0.0000

Note: For pole sections, center of pressure calculations do not consider feed line shielding.

Shielding Factor Ka

Tower Section	Feed Line Record No.	Description	Feed Line Segment Elev.	K_a No Ice	K_a Ice

Discrete Tower Loads

Description	Face or Leg	Offset Type	Offsets: Horz Lateral Vert ft ft ft	Azimuth Adjustment °	Placement ft		C_AA_A Front ft^2	C_AA_A Side ft^2	Weight K
***									
***									
***									
***									
***									
KS24019-L112A	B	From Leg	3.0000 0.00 1.00	0.00	69.0000	No Ice 1/2" Ice 1" Ice	0.1407 0.1979 0.2621	0.1407 0.1979 0.2621	0.01 0.01 0.01
Side Arm Mount [SO 701-1]	B	None		0.00	69.0000	No Ice 1/2" Ice 1" Ice	0.8500 1.1400 1.4300	1.6700 2.3400 3.0100	0.07 0.08 0.09
***									
DHHTT65B-3XR w/ Mount Pipe	A	From Leg	0.5000 0.00 1.00	0.00	94.0000	No Ice 1/2" Ice 1" Ice	0.0000 0.0000 0.0000	0.0000 0.0000 0.0000	0.07 0.14 0.22
DHHTT65B-3XR w/ Mount Pipe	B	From Leg	0.5000 0.00 1.00	0.00	94.0000	No Ice 1/2" Ice 1" Ice	0.0000 0.0000 0.0000	0.0000 0.0000 0.0000	0.07 0.14 0.22
DHHTT65B-3XR w/ Mount Pipe	C	From Leg	0.5000 0.00 1.00	0.00	94.0000	No Ice 1/2" Ice 1" Ice	0.0000 0.0000 0.0000	0.0000 0.0000 0.0000	0.07 0.14 0.22
(2) FD9R6004/1C-3L	A	From Leg	0.5000 0.00 -3.00	0.00	94.0000	No Ice 1/2" Ice 1" Ice	0.0000 0.0000 0.0000	0.0000 0.0000 0.0000	0.00 0.00 0.01
(2) FD9R6004/1C-3L	B	From Leg	0.5000 0.00 -3.00	0.00	94.0000	No Ice 1/2" Ice 1" Ice	0.0000 0.0000 0.0000	0.0000 0.0000 0.0000	0.00 0.00 0.01
(2) FD9R6004/1C-3L	C	From Leg	0.5000 0.00 -3.00	0.00	94.0000	No Ice 1/2" Ice	0.0000 0.0000 0.0000	0.0000 0.0000 0.0000	0.00 0.00 0.01

Description	Face or Leg	Offset Type	Offsets: Horz Lateral Vert ft ft ft	Azimuth Adjustment °	Placement ft		C_AA_A Front ft^2	C_AA_A Side ft^2	Weight K
***						1" Ice			
X7CQAP-665-VR0 w/ Mount Pipe	A	From Leg	0.5000 0.00 0.00	0.00	84.0000	No Ice 1/2" Ice 1" Ice	0.0000 0.0000 0.0000	0.0000 0.0000 0.0000	0.07 0.15 0.23
X7CQAP-665-VR0 w/ Mount Pipe	B	From Leg	0.5000 0.00 0.00	0.00	84.0000	No Ice 1/2" Ice 1" Ice	0.0000 0.0000 0.0000	0.0000 0.0000 0.0000	0.07 0.15 0.23
X7CQAP-665-VR0 w/ Mount Pipe	C	From Leg	0.5000 0.00 0.00	0.00	84.0000	No Ice 1/2" Ice 1" Ice	0.0000 0.0000 0.0000	0.0000 0.0000 0.0000	0.07 0.15 0.23
***									
APX16DWV-16DWV-S-E-A20 w/ Mount Pipe	A	From Leg	0.5000 0.00 1.00	0.00	74.0000	No Ice 1/2" Ice 1" Ice	0.0000 0.0000 0.0000	0.0000 0.0000 0.0000	0.06 0.11 0.16
APX16DWV-16DWV-S-E-A20 w/ Mount Pipe	B	From Leg	0.5000 0.00 1.00	0.00	74.0000	No Ice 1/2" Ice 1" Ice	0.0000 0.0000 0.0000	0.0000 0.0000 0.0000	0.06 0.11 0.16
APX16DWV-16DWV-S-E-A20 w/ Mount Pipe	C	From Leg	0.5000 0.00 1.00	0.00	74.0000	No Ice 1/2" Ice 1" Ice	0.0000 0.0000 0.0000	0.0000 0.0000 0.0000	0.06 0.11 0.16
E15S08P80	A	From Leg	0.5000 0.00 1.00	0.00	74.0000	No Ice 1/2" Ice 1" Ice	0.0000 0.0000 0.0000	0.0000 0.0000 0.0000	0.01 0.02 0.02
E15S08P80	B	From Leg	0.5000 0.00 1.00	0.00	74.0000	No Ice 1/2" Ice 1" Ice	0.0000 0.0000 0.0000	0.0000 0.0000 0.0000	0.01 0.02 0.02
E15S08P80	C	From Leg	0.5000 0.00 1.00	0.00	74.0000	No Ice 1/2" Ice 1" Ice	0.0000 0.0000 0.0000	0.0000 0.0000 0.0000	0.01 0.02 0.02
E15S09P45	A	From Leg	0.5000 0.00 1.00	0.00	74.0000	No Ice 1/2" Ice 1" Ice	0.0000 0.0000 0.0000	0.0000 0.0000 0.0000	0.02 0.03 0.04
E15S09P45	B	From Leg	0.5000 0.00 1.00	0.00	74.0000	No Ice 1/2" Ice 1" Ice	0.0000 0.0000 0.0000	0.0000 0.0000 0.0000	0.02 0.03 0.04
E15S09P45	C	From Leg	0.5000 0.00 1.00	0.00	74.0000	No Ice 1/2" Ice 1" Ice	0.0000 0.0000 0.0000	0.0000 0.0000 0.0000	0.02 0.03 0.04
Canister Load1	C	None		0.00	99.0000	No Ice 1/2" Ice 1" Ice	9.0000 18.5000 19.0000	9.0000 18.5000 19.0000	0.09 0.21 0.32
Canister Load2	C	None		0.00	89.0000	No Ice 1/2" Ice 1" Ice	18.0000 37.0000 38.0000	18.0000 37.0000 38.0000	0.31 0.54 0.76
Canister Load3	C	None		0.00	79.0000	No Ice 1/2" Ice 1" Ice	18.0000 37.0000 38.0000	18.0000 37.0000 38.0000	0.31 0.54 0.76
Canister Load4	C	None		0.00	69.0000	No Ice 1/2"	9.0000 18.5000	9.0000 18.5000	0.28 0.39

Description	Face or Leg	Offset Type	Offsets: Horz Lateral Vert ft ft ft	Azimuth Adjustment °	Placement ft		C_AA_A Front ft^2	C_AA_A Side ft^2	Weight K
						Ice	19.0000	19.0000	0.51
						1" Ice			
Truck Ball	C	None		0.00	99.5000	No Ice	0.3927	0.3927	0.05
						1/2"	0.6452	0.6452	0.06
						Ice	0.7483	0.7483	0.07
						1" Ice			

Tower Pressures - No Ice

G_H = 1.100

Section Elevation ft	z ft	K_Z	q_z psf	A_G ft^2	Face	A_F ft^2	A_R ft^2	A_{leg} ft^2	Leg %	C_AA_A In Face ft^2	C_AA_A Out Face ft^2
L1 99.0000-89.0000	94.0000	1.249	29.178	3.750	A	0.000	0.000	0.000	0.00	0.000	0.000
					B	0.000	0.000		0.00	0.000	0.000
					C	0.000	0.000		0.00	0.000	0.000
L2 89.0000-79.0000	83.9020	1.22	28.489	3.542	A	0.000	0.000	0.000	0.00	0.000	0.000
					B	0.000	0.000		0.00	0.000	0.000
					C	0.000	0.000		0.00	0.000	0.000
L3 79.0000-69.0000	74.0000	1.188	27.745	4.167	A	0.000	0.000	0.000	0.00	0.000	0.000
					B	0.000	0.000		0.00	0.000	0.000
					C	0.000	0.000		0.00	0.000	0.000
L4 69.0000-45.2100	56.6093	1.123	26.224	43.619	A	0.000	43.619	43.619	100.00	0.000	0.000
					B	0.000	43.619		100.00	0.000	0.000
					C	0.000	43.619		100.00	0.000	0.000
L5 45.2100-0.0000	22.2174	0.922	21.510	110.371	A	0.000	110.371	110.371	100.00	0.000	0.000
					B	0.000	110.371		100.00	0.000	0.000
					C	0.000	110.371		100.00	0.000	0.000

Tower Pressure - With Ice

G_H = 1.100

Section Elevation ft	z ft	K_Z	q_z psf	t_Z in	A_G ft^2	Face	A_F ft^2	A_R ft^2	A_{leg} ft^2	Leg %	C_AA_A In Face ft^2	C_AA_A Out Face ft^2
L1 99.0000-89.0000	94.0000	1.249	4.861	2.2207	7.451	A	0.000	0.000	0.000	0.00	0.000	0.000
						B	0.000	0.000		0.00	0.000	0.000
						C	0.000	0.000		0.00	0.000	0.000
L2 89.0000-79.0000	83.9020	1.22	4.746	2.1956	7.201	A	0.000	0.000	0.000	0.00	0.000	0.000
						B	0.000	0.000		0.00	0.000	0.000
						C	0.000	0.000		0.00	0.000	0.000
L3 79.0000-69.0000	74.0000	1.188	4.622	2.1682	7.780	A	0.000	0.000	0.000	0.00	0.000	0.000
						B	0.000	0.000		0.00	0.000	0.000
						C	0.000	0.000		0.00	0.000	0.000
L4 69.0000-45.2100	56.6093	1.123	4.369	2.1109	51.988	A	0.000	51.988	51.988	100.00	0.000	0.000
						B	0.000	51.988		100.00	0.000	0.000
						C	0.000	51.988		100.00	0.000	0.000
L5 45.2100-0.0000	22.2174	0.922	3.583	1.9224	126.277	A	0.000	126.277	126.277	100.00	0.000	0.000
						B	0.000	126.277		100.00	0.000	0.000
						C	0.000	126.277		100.00	0.000	0.000

Tower Pressure - Service

G_H = 1.100

Section Elevation ft	z ft	K_Z	q_z psf	A_G ft²	Face	A_F ft²	A_R ft²	A_{leg} ft²	Leg %	C_AA_A In Face ft²	C_AA_A Out Face ft²
L1 99.0000-89.0000	94.0000	1.249	9.786	3.750	A	0.000	0.000	0.000	0.00	0.000	0.000
					B	0.000	0.000		0.00	0.000	0.000
					C	0.000	0.000		0.00	0.000	0.000
L2 89.0000-79.0000	83.9020	1.22	9.555	3.542	A	0.000	0.000	0.000	0.00	0.000	0.000
					B	0.000	0.000		0.00	0.000	0.000
					C	0.000	0.000		0.00	0.000	0.000
L3 79.0000-69.0000	74.0000	1.188	9.305	4.167	A	0.000	0.000	0.000	0.00	0.000	0.000
					B	0.000	0.000		0.00	0.000	0.000
					C	0.000	0.000		0.00	0.000	0.000
L4 69.0000-45.2100	56.6093	1.123	8.795	43.619	A	0.000	43.619	43.619	100.00	0.000	0.000
					B	0.000	43.619		100.00	0.000	0.000
					C	0.000	43.619		100.00	0.000	0.000
L5 45.2100-0.0000	22.2174	0.922	7.214	110.371	A	0.000	110.371	110.371	100.00	0.000	0.000
					B	0.000	110.371		100.00	0.000	0.000
					C	0.000	110.371		100.00	0.000	0.000

Load Combinations

Comb. No.	Description
1	Dead Only
2	1.2 Dead+1.6 Wind 0 deg - No Ice
3	0.9 Dead+1.6 Wind 0 deg - No Ice
4	1.2 Dead+1.6 Wind 30 deg - No Ice
5	0.9 Dead+1.6 Wind 30 deg - No Ice
6	1.2 Dead+1.6 Wind 60 deg - No Ice
7	0.9 Dead+1.6 Wind 60 deg - No Ice
8	1.2 Dead+1.6 Wind 90 deg - No Ice
9	0.9 Dead+1.6 Wind 90 deg - No Ice
10	1.2 Dead+1.6 Wind 120 deg - No Ice
11	0.9 Dead+1.6 Wind 120 deg - No Ice
12	1.2 Dead+1.6 Wind 150 deg - No Ice
13	0.9 Dead+1.6 Wind 150 deg - No Ice
14	1.2 Dead+1.6 Wind 180 deg - No Ice
15	0.9 Dead+1.6 Wind 180 deg - No Ice
16	1.2 Dead+1.6 Wind 210 deg - No Ice
17	0.9 Dead+1.6 Wind 210 deg - No Ice
18	1.2 Dead+1.6 Wind 240 deg - No Ice
19	0.9 Dead+1.6 Wind 240 deg - No Ice
20	1.2 Dead+1.6 Wind 270 deg - No Ice
21	0.9 Dead+1.6 Wind 270 deg - No Ice
22	1.2 Dead+1.6 Wind 300 deg - No Ice
23	0.9 Dead+1.6 Wind 300 deg - No Ice
24	1.2 Dead+1.6 Wind 330 deg - No Ice
25	0.9 Dead+1.6 Wind 330 deg - No Ice
26	1.2 Dead+1.0 Ice+1.0 Temp
27	1.2 Dead+1.0 Wind 0 deg+1.0 Ice+1.0 Temp
28	1.2 Dead+1.0 Wind 30 deg+1.0 Ice+1.0 Temp
29	1.2 Dead+1.0 Wind 60 deg+1.0 Ice+1.0 Temp
30	1.2 Dead+1.0 Wind 90 deg+1.0 Ice+1.0 Temp
31	1.2 Dead+1.0 Wind 120 deg+1.0 Ice+1.0 Temp
32	1.2 Dead+1.0 Wind 150 deg+1.0 Ice+1.0 Temp
33	1.2 Dead+1.0 Wind 180 deg+1.0 Ice+1.0 Temp
34	1.2 Dead+1.0 Wind 210 deg+1.0 Ice+1.0 Temp
35	1.2 Dead+1.0 Wind 240 deg+1.0 Ice+1.0 Temp
36	1.2 Dead+1.0 Wind 270 deg+1.0 Ice+1.0 Temp
37	1.2 Dead+1.0 Wind 300 deg+1.0 Ice+1.0 Temp

Comb. No.	Description
38	1.2 Dead+1.0 Wind 330 deg+1.0 Ice+1.0 Temp
39	Dead+Wind 0 deg - Service
40	Dead+Wind 30 deg - Service
41	Dead+Wind 60 deg - Service
42	Dead+Wind 90 deg - Service
43	Dead+Wind 120 deg - Service
44	Dead+Wind 150 deg - Service
45	Dead+Wind 180 deg - Service
46	Dead+Wind 210 deg - Service
47	Dead+Wind 240 deg - Service
48	Dead+Wind 270 deg - Service
49	Dead+Wind 300 deg - Service
50	Dead+Wind 330 deg - Service

Maximum Member Forces

Section No.	Elevation ft	Component Type	Condition	Gov. Load Comb.	Axial K	Major Axis Moment kip-ft	Minor Axis Moment kip-ft
L1	99 - 89	Pole	Max Tension	8	0.00	0.00	0.00
			Max. Compression	26	-2.63	-0.00	-0.00
			Max. Mx	8	-0.53	-5.33	-0.00
			Max. My	14	-0.53	-0.00	-5.33
			Max. Vy	8	0.55	-5.33	-0.00
			Max. Vx	14	0.55	-0.00	-5.33
			Max. Torque	16			-0.00
L2	89 - 79	Pole	Max Tension	1	0.00	0.00	0.00
			Max. Compression	26	-6.34	-0.00	-0.00
			Max. Mx	8	-1.74	-20.64	-0.00
			Max. My	14	-1.74	-0.00	-20.64
			Max. Vy	8	1.55	-16.00	-0.00
			Max. Vx	14	1.55	-0.00	-16.00
			Max. Torque	16			-0.00
L3	79 - 69	Pole	Max Tension	1	0.00	0.00	0.00
			Max. Compression	26	-10.23	-0.00	-0.00
			Max. Mx	8	-3.41	-45.04	-0.00
			Max. My	14	-3.41	-0.00	-45.04
			Max. Vy	8	2.46	-23.10	-0.00
			Max. Vx	14	2.46	-0.00	-23.10
			Max. Torque	16			-0.00
L4	69 - 45.21	Pole	Max Tension	1	0.00	0.00	0.00
			Max. Compression	26	-14.46	-0.06	-0.04
			Max. Mx	8	-5.80	-114.67	-0.01
			Max. My	14	-5.80	-0.02	-114.66
			Max. Vy	8	4.01	-114.67	-0.01
			Max. Vx	14	4.01	-0.02	-114.66
			Max. Torque	4			-0.02
L5	45.21 - 0	Pole	Max Tension	1	0.00	0.00	0.00
			Max. Compression	26	-24.80	-0.06	-0.04
			Max. Mx	8	-12.42	-379.48	-0.01
			Max. My	14	-12.42	-0.02	-379.48
			Max. Vy	8	6.84	-379.48	-0.01
			Max. Vx	14	6.84	-0.02	-379.48
			Max. Torque	4			-0.02

Maximum Reactions

Location	Condition	Gov. Load Comb.	Vertical K	Horizontal, X K	Horizontal, Z K
Pole	Max. Vert	26	24.80	-0.00	-0.00
	Max. H_x	21	9.32	6.84	-0.00
	Max. H_z	3	9.32	-0.00	6.84

Location	Condition	Gov. Load Comb.	Vertical K	Horizontal, X K	Horizontal, Z K
	Max. M_x	2	379.46	-0.00	6.84
	Max. M_z	8	379.48	-6.84	-0.00
	Max. Torsion	16	0.02	3.42	-5.92
	Min. Vert	9	9.32	-6.84	-0.00
	Min. H_x	9	9.32	-6.84	-0.00
	Min. H_z	15	9.32	-0.00	-6.84
	Min. M_x	14	-379.48	-0.00	-6.84
	Min. M_z	20	-379.45	6.84	-0.00
	Min. Torsion	4	-0.02	-3.42	5.92

Tower Mast Reaction Summary

Load Combination	Vertical K	$Shear_x$ K	$Shear_z$ K	Overturning Moment, M_x kip-ft	Overturning Moment, M_z kip-ft	Torque kip-ft
Dead Only	10.35	0.00	0.00	0.01	-0.01	0.00
1.2 Dead+1.6 Wind 0 deg - No Ice	12.42	0.00	-6.84	-379.46	-0.02	0.02
0.9 Dead+1.6 Wind 0 deg - No Ice	9.32	0.00	-6.84	-377.06	-0.01	0.02
1.2 Dead+1.6 Wind 30 deg - No Ice	12.42	3.42	-5.92	-328.65	-189.77	0.02
0.9 Dead+1.6 Wind 30 deg - No Ice	9.32	3.42	-5.92	-326.57	-188.56	0.02
1.2 Dead+1.6 Wind 60 deg - No Ice	12.42	5.92	-3.42	-189.74	-328.68	0.02
0.9 Dead+1.6 Wind 60 deg - No Ice	9.32	5.92	-3.42	-188.54	-326.59	0.02
1.2 Dead+1.6 Wind 90 deg - No Ice	12.42	6.84	0.00	0.01	-379.48	0.01
0.9 Dead+1.6 Wind 90 deg - No Ice	9.32	6.84	0.00	0.01	-377.08	0.01
1.2 Dead+1.6 Wind 120 deg - No Ice	12.42	5.92	3.42	189.76	-328.68	0.00
0.9 Dead+1.6 Wind 120 deg - No Ice	9.32	5.92	3.42	188.56	-326.59	0.00
1.2 Dead+1.6 Wind 150 deg - No Ice	12.42	3.42	5.92	328.67	-189.77	-0.01
0.9 Dead+1.6 Wind 150 deg - No Ice	9.32	3.42	5.92	326.58	-188.56	-0.01
1.2 Dead+1.6 Wind 180 deg - No Ice	12.42	0.00	6.84	379.48	-0.02	-0.02
0.9 Dead+1.6 Wind 180 deg - No Ice	9.32	0.00	6.84	377.08	-0.01	-0.02
1.2 Dead+1.6 Wind 210 deg - No Ice	12.42	-3.42	5.92	328.67	189.74	-0.02
0.9 Dead+1.6 Wind 210 deg - No Ice	9.32	-3.42	5.92	326.58	188.54	-0.02
1.2 Dead+1.6 Wind 240 deg - No Ice	12.42	-5.92	3.42	189.76	328.64	-0.02
0.9 Dead+1.6 Wind 240 deg - No Ice	9.32	-5.92	3.42	188.56	326.56	-0.02
1.2 Dead+1.6 Wind 270 deg - No Ice	12.42	-6.84	0.00	0.01	379.45	-0.01
0.9 Dead+1.6 Wind 270 deg - No Ice	9.32	-6.84	0.00	0.01	377.05	-0.01
1.2 Dead+1.6 Wind 300 deg - No Ice	12.42	-5.92	-3.42	-189.74	328.64	0.00
0.9 Dead+1.6 Wind 300 deg - No Ice	9.32	-5.92	-3.42	-188.54	326.56	0.00
1.2 Dead+1.6 Wind 330 deg - No Ice	12.42	-3.42	-5.92	-328.65	189.74	0.01
0.9 Dead+1.6 Wind 330 deg - No Ice	9.32	-3.42	-5.92	-326.57	188.54	0.01
1.2 Dead+1.0 Ice+1.0 Temp	24.80	0.00	0.00	0.04	-0.06	0.00

Load Combination	Vertical K	$Shear_x$ K	$Shear_z$ K	Overturning Moment, M_x kip-ft	Overturning Moment, M_z kip-ft	Torque kip-ft
1.2 Dead+1.0 Wind 0 deg+1.0 Ice+1.0 Temp	24.80	-0.00	-1.56	-92.87	-0.07	0.01
1.2 Dead+1.0 Wind 30 deg+1.0 Ice+1.0 Temp	24.80	0.78	-1.35	-80.42	-46.52	0.01
1.2 Dead+1.0 Wind 60 deg+1.0 Ice+1.0 Temp	24.80	1.35	-0.78	-46.41	-80.52	0.01
1.2 Dead+1.0 Wind 90 deg+1.0 Ice+1.0 Temp	24.80	1.56	-0.00	0.04	-92.97	0.00
1.2 Dead+1.0 Wind 120 deg+1.0 Ice+1.0 Temp	24.80	1.35	0.78	46.49	-80.52	0.00
1.2 Dead+1.0 Wind 150 deg+1.0 Ice+1.0 Temp	24.80	0.78	1.35	80.50	-46.52	-0.00
1.2 Dead+1.0 Wind 180 deg+1.0 Ice+1.0 Temp	24.80	-0.00	1.56	92.94	-0.07	-0.01
1.2 Dead+1.0 Wind 210 deg+1.0 Ice+1.0 Temp	24.80	-0.78	1.35	80.50	46.38	-0.01
1.2 Dead+1.0 Wind 240 deg+1.0 Ice+1.0 Temp	24.80	-1.35	0.78	46.49	80.39	-0.01
1.2 Dead+1.0 Wind 270 deg+1.0 Ice+1.0 Temp	24.80	-1.56	-0.00	0.04	92.84	-0.00
1.2 Dead+1.0 Wind 300 deg+1.0 Ice+1.0 Temp	24.80	-1.35	-0.78	-46.41	80.39	0.00
1.2 Dead+1.0 Wind 330 deg+1.0 Ice+1.0 Temp	24.80	-0.78	-1.35	-80.42	46.38	0.00
Dead+Wind 0 deg - Service	10.35	-0.00	-1.43	-79.21	-0.01	0.00
Dead+Wind 30 deg - Service	10.35	0.72	-1.24	-68.59	-39.62	0.00
Dead+Wind 60 deg - Service	10.35	1.24	-0.72	-39.60	-68.62	0.00
Dead+Wind 90 deg - Service	10.35	1.43	-0.00	0.01	-79.23	0.00
Dead+Wind 120 deg - Service	10.35	1.24	0.72	39.62	-68.62	0.00
Dead+Wind 150 deg - Service	10.35	0.72	1.24	68.61	-39.62	-0.00
Dead+Wind 180 deg - Service	10.35	-0.00	1.43	79.22	-0.01	-0.00
Dead+Wind 210 deg - Service	10.35	-0.72	1.24	68.61	39.59	-0.00
Dead+Wind 240 deg - Service	10.35	-1.24	0.72	39.62	68.59	-0.00
Dead+Wind 270 deg - Service	10.35	-1.43	-0.00	0.01	79.20	-0.00
Dead+Wind 300 deg - Service	10.35	-1.24	-0.72	-39.60	68.59	0.00
Dead+Wind 330 deg - Service	10.35	-0.72	-1.24	-68.59	39.59	0.00

Solution Summary

	Sum of Applied Forces			Sum of Reactions			
Load Comb.	PX K	PY K	PZ K	PX K	PY K	PZ K	% Error
1	0.00	-10.35	0.00	0.00	10.35	0.00	0.000%
2	0.00	-12.42	-6.84	-0.00	12.42	6.84	0.008%
3	0.00	-9.32	-6.84	-0.00	9.32	6.84	0.007%
4	3.42	-12.42	-5.92	-3.42	12.42	5.92	0.005%
5	3.42	-9.32	-5.92	-3.42	9.32	5.92	0.004%
6	5.92	-12.42	-3.42	-5.92	12.42	3.42	0.005%
7	5.92	-9.32	-3.42	-5.92	9.32	3.42	0.004%
8	6.84	-12.42	0.00	-6.84	12.42	-0.00	0.008%
9	6.84	-9.32	0.00	-6.84	9.32	-0.00	0.007%
10	5.92	-12.42	3.42	-5.92	12.42	-3.42	0.005%
11	5.92	-9.32	3.42	-5.92	9.32	-3.42	0.004%
12	3.42	-12.42	5.92	-3.42	12.42	-5.92	0.005%
13	3.42	-9.32	5.92	-3.42	9.32	-5.92	0.004%
14	0.00	-12.42	6.84	-0.00	12.42	-6.84	0.008%
15	0.00	-9.32	6.84	-0.00	9.32	-6.84	0.007%
16	-3.42	-12.42	5.92	3.42	12.42	-5.92	0.005%

Load Comb.	Sum of Applied Forces PX K	PY K	PZ K	Sum of Reactions PX K	PY K	PZ K	% Error
17	-3.42	-9.32	5.92	3.42	9.32	-5.92	0.004%
18	-5.92	-12.42	3.42	5.92	12.42	-3.42	0.005%
19	-5.92	-9.32	3.42	5.92	9.32	-3.42	0.004%
20	-6.84	-12.42	0.00	6.84	12.42	-0.00	0.008%
21	-6.84	-9.32	0.00	6.84	9.32	-0.00	0.007%
22	-5.92	-12.42	-3.42	5.92	12.42	3.42	0.005%
23	-5.92	-9.32	-3.42	5.92	9.32	3.42	0.004%
24	-3.42	-12.42	-5.92	3.42	12.42	5.92	0.005%
25	-3.42	-9.32	-5.92	3.42	9.32	5.92	0.004%
26	0.00	-24.80	0.00	-0.00	24.80	-0.00	0.000%
27	0.00	-24.80	-1.56	0.00	24.80	1.56	0.001%
28	0.78	-24.80	-1.35	-0.78	24.80	1.35	0.001%
29	1.35	-24.80	-0.78	-1.35	24.80	0.78	0.001%
30	1.56	-24.80	0.00	-1.56	24.80	0.00	0.001%
31	1.35	-24.80	0.78	-1.35	24.80	-0.78	0.001%
32	0.78	-24.80	1.35	-0.78	24.80	-1.35	0.001%
33	0.00	-24.80	1.56	0.00	24.80	-1.56	0.001%
34	-0.78	-24.80	1.35	0.78	24.80	-1.35	0.001%
35	-1.35	-24.80	0.78	1.35	24.80	-0.78	0.001%
36	-1.56	-24.80	0.00	1.56	24.80	0.00	0.001%
37	-1.35	-24.80	-0.78	1.35	24.80	0.78	0.001%
38	-0.78	-24.80	-1.35	0.78	24.80	1.35	0.001%
39	0.00	-10.35	-1.43	0.00	10.35	1.43	0.005%
40	0.72	-10.35	-1.24	-0.72	10.35	1.24	0.005%
41	1.24	-10.35	-0.72	-1.24	10.35	0.72	0.005%
42	1.43	-10.35	0.00	-1.43	10.35	0.00	0.005%
43	1.24	-10.35	0.72	-1.24	10.35	-0.72	0.005%
44	0.72	-10.35	1.24	-0.72	10.35	-1.24	0.005%
45	0.00	-10.35	1.43	0.00	10.35	-1.43	0.005%
46	-0.72	-10.35	1.24	0.72	10.35	-1.24	0.005%
47	-1.24	-10.35	0.72	1.24	10.35	-0.72	0.005%
48	-1.43	-10.35	0.00	1.43	10.35	0.00	0.005%
49	-1.24	-10.35	-0.72	1.24	10.35	0.72	0.005%
50	-0.72	-10.35	-1.24	0.72	10.35	1.24	0.005%

Non-Linear Convergence Results

Load Combination	Converged?	Number of Cycles	Displacement Tolerance	Force Tolerance
1	Yes	6	0.00000001	0.00000001
2	Yes	19	0.00014834	0.00008509
3	Yes	19	0.00010186	0.00007136
4	Yes	20	0.00009104	0.00013992
5	Yes	20	0.00000001	0.00011279
6	Yes	20	0.00009104	0.00013929
7	Yes	20	0.00000001	0.00011225
8	Yes	19	0.00014834	0.00008508
9	Yes	19	0.00010185	0.00007136
10	Yes	20	0.00009104	0.00013959
11	Yes	20	0.00000001	0.00011251
12	Yes	20	0.00009104	0.00013976
13	Yes	20	0.00000001	0.00011266
14	Yes	19	0.00014834	0.00008509
15	Yes	19	0.00010185	0.00007137
16	Yes	20	0.00009104	0.00013923
17	Yes	20	0.00000001	0.00011221
18	Yes	20	0.00009104	0.00013986
19	Yes	20	0.00000001	0.00011275
20	Yes	19	0.00014834	0.00008508
21	Yes	19	0.00010186	0.00007135
22	Yes	20	0.00009104	0.00013955
23	Yes	20	0.00000001	0.00011249
24	Yes	20	0.00009104	0.00013938
25	Yes	20	0.00000001	0.00011234
26	Yes	6	0.00000001	0.00000001

27	Yes	24	0.00000001	0.00001492
28	Yes	24	0.00000001	0.00001519
29	Yes	24	0.00000001	0.00001519
30	Yes	24	0.00000001	0.00001494
31	Yes	24	0.00000001	0.00001520
32	Yes	24	0.00000001	0.00001520
33	Yes	24	0.00000001	0.00001493
34	Yes	24	0.00000001	0.00001518
35	Yes	24	0.00000001	0.00001518
36	Yes	24	0.00000001	0.00001492
37	Yes	24	0.00000001	0.00001517
38	Yes	24	0.00000001	0.00001517
39	Yes	17	0.00000001	0.00005032
40	Yes	17	0.00000001	0.00004761
41	Yes	17	0.00000001	0.00004760
42	Yes	17	0.00000001	0.00005033
43	Yes	17	0.00000001	0.00004761
44	Yes	17	0.00000001	0.00004761
45	Yes	17	0.00000001	0.00005033
46	Yes	17	0.00000001	0.00004760
47	Yes	17	0.00000001	0.00004760
48	Yes	17	0.00000001	0.00005031
49	Yes	17	0.00000001	0.00004760
50	Yes	17	0.00000001	0.00004759

Maximum Tower Deflections - Service Wind

Section No.	*Elevation* *ft*	*Horz. Deflection* *in*	*Gov. Load Comb.*	*Tilt* °	*Twist* °
L1	99 - 89	9.44	42	1.61	0.00
L2	89 - 79	6.21	43	1.40	0.00
L3	79 - 69	3.71	43	0.94	0.00
L4	69 - 45.21	2.32	43	0.30	0.00
L5	48.79 - 0	1.19	43	0.23	0.00

Critical Deflections and Radius of Curvature - Service Wind

Elevation *ft*	*Appurtenance*	*Gov. Load Comb.*	*Deflection* *in*	*Tilt* °	*Twist* °	*Radius of Curvature* *ft*
99.5000	Truck Ball	42	9.44	1.61	0.00	3231
99.0000	Canister Load1	42	9.44	1.61	0.00	3231
94.0000	DHHTT65B-3XR w/ Mount Pipe	42	7.78	1.52	0.00	3231
89.0000	Canister Load2	43	6.21	1.40	0.00	1639
84.0000	X7CQAP-665-VR0 w/ Mount Pipe	43	4.83	1.21	0.00	1143
79.0000	Canister Load3	43	3.71	0.94	0.00	968
74.0000	APX16DWV-16DWV-S-E-A20 w/ Mount Pipe	43	2.89	0.60	0.00	1242
69.0000	KS24019-L112A	43	2.32	0.30	0.00	1938

Maximum Tower Deflections - Design Wind

Section No.	*Elevation* *ft*	*Horz. Deflection* *in*	*Gov. Load Comb.*	*Tilt* °	*Twist* °
L1	99 - 89	45.33	8	7.76	0.00
L2	89 - 79	29.83	8	6.73	0.00
L3	79 - 69	17.78	8	4.51	0.00

Section No.	Elevation ft	Horz. Deflection in	Gov. Load Comb.	Tilt °	Twist °
L4	69 - 45.21	11.14	10	1.46	0.00
L5	48.79 - 0	5.73	10	1.08	0.00

Critical Deflections and Radius of Curvature - Design Wind

Elevation ft	Appurtenance	Gov. Load Comb.	Deflection in	Tilt °	Twist °	Radius of Curvature ft
99.5000	Truck Ball	8	45.33	7.76	0.00	695
99.0000	Canister Load1	8	45.33	7.76	0.00	695
94.0000	DHHTT65B-3XR w/ Mount Pipe	8	37.36	7.33	0.00	695
89.0000	Canister Load2	8	29.83	6.73	0.00	351
84.0000	X7CQAP-665-VR0 w/ Mount Pipe	8	23.18	5.81	0.00	242
79.0000	Canister Load3	8	17.78	4.51	0.00	203
74.0000	APX16DWV-16DWV-S-E-A20 w/ Mount Pipe	10	13.88	2.89	0.00	259
69.0000	KS24019-L112A	10	11.14	1.46	0.00	403

Compression Checks

Pole Design Data

Section No.	Elevation ft	Size	L ft	L_u ft	Kl/r	A in^2	P_u K	ϕP_n K	Ratio $\frac{P_u}{\phi P_n}$
L1	99 - 89 (1)	TP4.5x4.5x0.237	10.0000	0.0000	0.0	3.1741	-0.53	99.98	0.005
L2	89 - 79 (2)	TP4.5x4x2	10.0000	0.0000	0.0	15.7080	-1.75	706.86	0.002
L3	79 - 69 (3)	TP5x5x2.5	10.0000	0.0000	0.0	19.6350	-3.41	883.57	0.004
L4	69 - 45.21 (4)	TP24.43x19x0.3125	23.7900	0.0000	0.0	23.1111	-5.80	1717.04	0.003
L5	45.21 - 0 (5)	TP34x22.9879x0.3125	48.7900	0.0000	0.0	33.4138	-12.42	2434.31	0.005

Pole Bending Design Data

Section No.	Elevation ft	Size	M_{ux} kip-ft	ϕM_{nx} kip-ft	Ratio $\frac{M_{ux}}{\phi M_{nx}}$	M_{uy} kip-ft	ϕM_{ny} kip-ft	Ratio $\frac{M_{uy}}{\phi M_{ny}}$
L1	99 - 89 (1)	TP4.5x4.5x0.237	5.33	11.32	0.471	0.00	11.32	0.000
L2	89 - 79 (2)	TP4.5x4x2	20.65	56.88	0.363	0.00	56.88	0.000
L3	79 - 69 (3)	TP5x5x2.5	45.05	78.13	0.577	0.00	78.13	0.000
L4	69 - 45.21 (4)	TP24.43x19x0.3125	114.69	818.18	0.140	0.00	818.18	0.000
L5	45.21 - 0 (5)	TP34x22.9879x0.3125	379.53	1683.94	0.225	0.00	1683.94	0.000

Pole Shear Design Data

Section No.	Elevation ft	Size	Actual V_u K	ϕV_n K	Ratio $\frac{V_u}{\phi V_n}$	Actual T_u kip-ft	ϕT_n kip-ft	Ratio $\frac{T_u}{\phi T_n}$
L1	99 - 89 (1)	TP4.5x4.5x0.237	0.56	49.99	0.011	0.00	16.88	0.000
L2	89 - 79 (2)	TP4.5x4x2	1.55	353.43	0.004	0.00	67.09	0.000
L3	79 - 69 (3)	TP5x5x2.5	2.39	441.79	0.005	0.00	92.04	0.000
L4	69 - 45.21 (4)	TP24.43x19x0.3125	4.02	858.52	0.005	0.00	1641.66	0.000
L5	45.21 - 0 (5)	TP34x22.9879x0.3125	6.84	1217.15	0.006	0.00	3376.72	0.000

Pole Interaction Design Data

Section No.	Elevation ft	Ratio $\frac{P_u}{\phi P_n}$	Ratio $\frac{M_{ux}}{\phi M_{nx}}$	Ratio $\frac{M_{uy}}{\phi M_{ny}}$	Ratio $\frac{V_u}{\phi V_n}$	Ratio $\frac{T_u}{\phi T_n}$	Comb. Stress Ratio	Allow. Stress Ratio	Criteria
L1	99 - 89 (1)	0.005	0.471	0.000	0.011	0.000	0.477 ✔	1.000	4.8.2 ✔
L2	89 - 79 (2)	0.002	0.363	0.000	0.004	0.000	0.366 ✔	1.000	4.8.2 ✔
L3	79 - 69 (3)	0.004	0.577	0.000	0.005	0.000	0.581 ✔	1.000	4.8.2 ✔
L4	69 - 45.21 (4)	0.003	0.140	0.000	0.005	0.000	0.144 ✔	1.000	4.8.2 ✔
L5	45.21 - 0 (5)	0.005	0.225	0.000	0.006	0.000	0.231 ✔	1.000	4.8.2 ✔

Section Capacity Table

Section No.	Elevation ft	Component Type	Size	Critical Element	P K	ϕP_{allow} K	% Capacity	Pass Fail
L1	99 - 89	Pole	TP4.5x4.5x0.237	1	-0.53	99.98	47.7	Pass
L2	89 - 79	Pole	TP4.5x4x2	2	-1.75	706.86	36.6	Pass
L3	79 - 69	Pole	TP5x5x2.5	3	-3.41	883.57	58.1	Pass
L4	69 - 45.21	Pole	TP24.43x19x0.3125	4	-5.80	1717.04	14.4	Pass
L5	45.21 - 0	Pole	TP34x22.9879x0.3125	5	-12.42	2434.31	23.1	Pass
							Summary	
						Pole (L3)	58.1	Pass
						RATING =	**58.1**	**Pass**

APPENDIX B

BASE LEVEL DRAWING

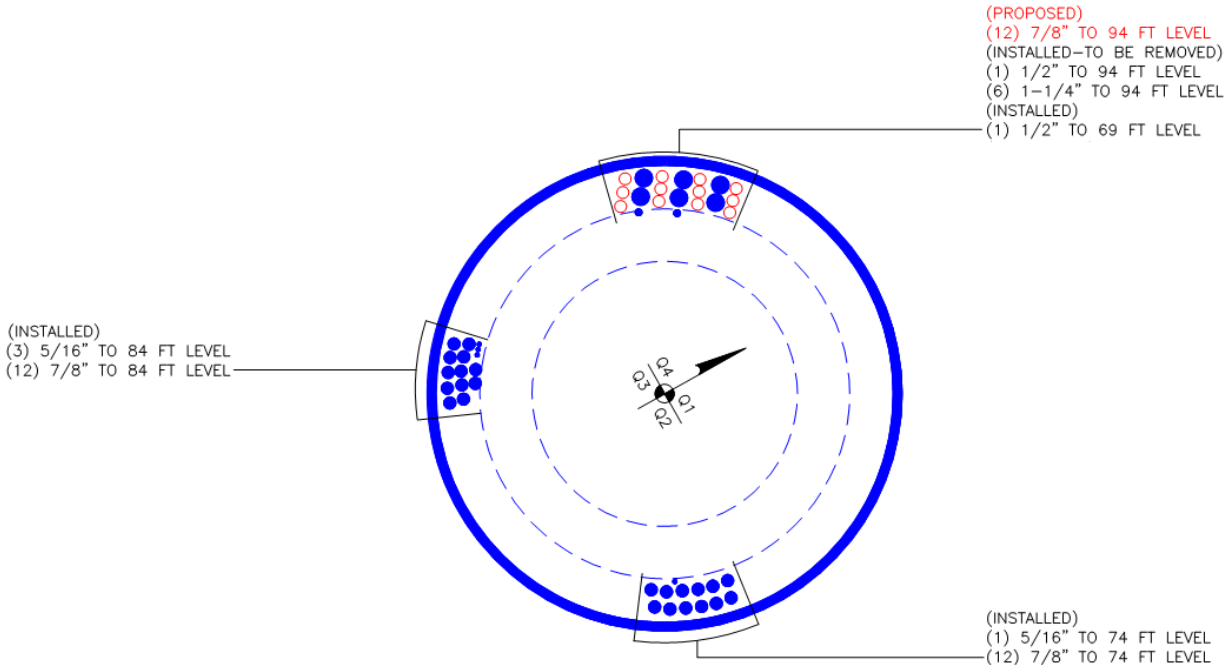
(PROPOSED)
(12) 7/8" TO 94 FT LEVEL
(INSTALLED–TO BE REMOVED)
(1) 1/2" TO 94 FT LEVEL
(6) 1–1/4" TO 94 FT LEVEL
(INSTALLED)
(1) 1/2" TO 69 FT LEVEL
(INSTALLED)
(3) 5/16" TO 84 FT LEVEL
(12) 7/8" TO 84 FT LEVEL
Q4
Q3
Q1
Q2
(INSTALLED)
(1) 5/16" TO 74 FT LEVEL
(12) 7/8" TO 74 FT LEVEL

APPENDIX C

ADDITIONAL CALCULATIONS

Section	Length (ft)	Number of Sides	Thickness (in)	Socket Length (ft)	Top Dia (in)	Bot Dia (in)	Grade	Weight (K)
1	10.0000	0	0.2370		4.5000	4.5000	A53-B-35	0.1
2	10.0000	0	2.0000		4.0000	4.5000	A53-B-35	0.5
3	10.0000	0	2.5000		5.0000	5.0000	A572-50	0.7
4	23.7900	18	0.3125	3.5800	19.0000	24.4300	A572-50	1.7
5	48.7900	18	0.3125		22.9879	34.0000	A572-65	4.6
								7.6

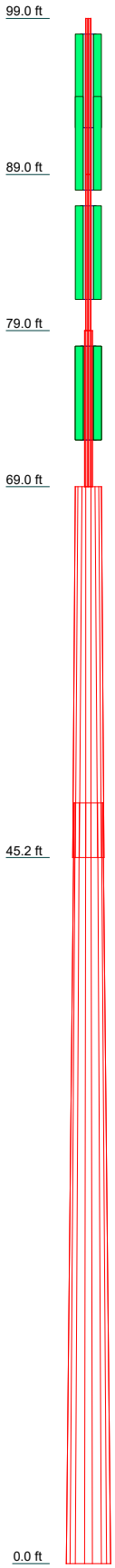

ALL REACTIONS ARE FACTORED

AXIAL 25 K

SHEAR 2 K *MOMENT 93 kip-ft*

TORQUE 0 kip-ft

40 mph WIND - 1.0000 in ICE

AXIAL 12 K

SHEAR 7 K *MOMENT 380 kip-ft*

TORQUE 0 kip-ft

REACTIONS - 98 mph WIND

DESIGNED APPURTENANCE LOADING

TYPE	ELEVATION	TYPE	ELEVATION
Truck Ball	99.5	E15S08P80	74
Canister Load1	99	E15S08P80	74
DHHTT65B-3XR w/ Mount Pipe	94	E15S08P80	74
DHHTT65B-3XR w/ Mount Pipe	94	E15S09P45	74
DHHTT65B-3XR w/ Mount Pipe	94	E15S09P45	74
(2) FD9R6004/1C-3L	94	E15S09P45	74
(2) FD9R6004/1C-3L	94	APX16DWV-16DWV-S-E-A20 w/ Mount Pipe	74
(2) FD9R6004/1C-3L	94		
Canister Load2	89	APX16DWV-16DWV-S-E-A20 w/ Mount Pipe	74
X7CQAP-665-VR0 w/ Mount Pipe	84		
X7CQAP-665-VR0 w/ Mount Pipe	84	Side Arm Mount [SO 701-1]	69
X7CQAP-665-VR0 w/ Mount Pipe	84	Canister Load4	69
Canister Load3	79	KS24019-L112A	69
APX16DWV-16DWV-S-E-A20 w/ Mount Pipe	74		

MATERIAL STRENGTH

GRADE	Fy	Fu	GRADE	Fy	Fu
A53-B-35	35 ksi	60 ksi	A572-65	65 ksi	80 ksi
A572-50	50 ksi	65 ksi			

TOWER DESIGN NOTES

1. Tower is located in Worcester County, Massachusetts.
2. Tower designed for Exposure C to the TIA-222-G Standard.
3. Tower designed for a 98 mph basic wind in accordance with the TIA-222-G Standard.
4. Tower is also designed for a 40 mph basic wind with 1.00 in ice. Ice is considered to increase in thickness with height.
5. Deflections are based upon a 60 mph wind.
6. Tower Structure Class II.
7. Topographic Category 1 with Crest Height of 0.0000 ft
8. TOWER RATING: 58.1%

Paul J. Ford & Company
250 E. Broad St., Suite 600
Columbus, OH 43215
Phone: (614) 221-6679
FAX:

Job: ***98' Monopole / Grafton, MA***		
Project: ***37516-0177.001.7805 / BU 875060***		
Client: Crown Castle	Drawn by: djack	App'd:
Code: TIA-222-G	Date: 08/13/18	Scale: NTS
Path: G:\TOWER\375_Crown_Castle\2018\37518-2758_875060_TUFTS\37518-2758.001.7805_SA_1601609\37518-2758.001.7805 Concealment.eri		Dwg No. E-1

CCI Flagpole Tool

Site Data	
BU#:	875060
Site Name:	
App #:	

Code		
Code:	TIA-222-G	
Ice Thickness:	1	in
Windspeed (V):	100	mph
Ice Wind Speed (V):	40	mph
Exposure Category:	C	
Topographic Feature:	N/A	
Structure Class:	II	

Tower Information		
Total Tower Height:	99	ft
Base Tower Height:	69	ft
Total Canister Length:	30	ft
Number of Canister Assembly Sections:	3	

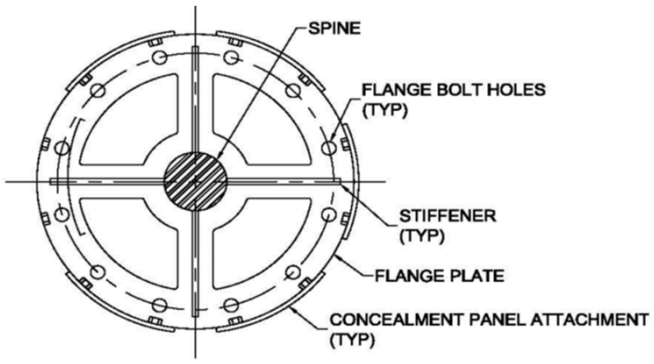

FLANGE PLATE
(TYPE 2: SOLIDITY RATIO 0.75)

Canister Section Number *:	Canister Assembly Length (ft):	Canister Assembly Diameter (in):	Number of Sides Canister Section	Plate Type:	Mating Flange Plate Thickness (in)**:	Mating Flange Plate Diameter (in):	Solidity Ratio	Plate Weight (Kip):	Canister Weight (Kip)
1	10	36	Round	2	1.00	19.25	0.75	0.124	0.188
2	10	36	Round	2	1.00	19.25	0.75	0.124	0.188
3	10	36	Round	2	1.50	19.25	0.75	0.186	0.188

* Sections are numbered from the top of the tower down ** Mating Flange Plate Thickness at the bottom of canister section

Flag on Tower:	No

Truck Ball on Tower:	Yes	
Diameter of Ball:	12	in

Geometry : Base Tower + Spine 37518-2758.001.7805.eri *(last saved 08/10 8:52 am)*

Pole Height Above Base (ft)	Section Length (ft)	Lap Splice Length (ft)	Number of Sides	Top Diameter (in)	Bottom Diameter (in)	Wall Thickness (in)	Bend Radius (in)	Pole Material	Delete
99	10	0	0	4.5	4.5	0.237	n/a	A53-B-35	[x]
89	10	0	0	4	4.5	2	n/a	A572-50	[x]
79	10	0	0	5	5	2.5	n/a	A572-50	[x]
69	23.79	3.58	18	19	24.43	0.3125	1.25	A572-65	[x]
48.79	48.79	0	18	22.987875	34	0.3125	1.25	A572-65	[x]

Discrete Loads: Truck Ball	Apply C_aA_A at Elevation(z) (ft)	C_aA_A No Ice (ft^2)	C_aA_A 1/2" Ice (ft^2)	C_aA_A 1" Ice (ft^2)	C_aA_A 2" Ice (ft^2)	C_aA_A 4" Ice (ft^2)	Weight No Ice (Kip)	Weight 1/2" Ice (Kip)
	99.5	0.393	0.645	0.748	0.977	1.527	0.05	0.058

Discrete Loads : C_FA_F for Canister Assembly								
Canister Loading	Apply C_FA_F at Elevation(z) (ft)	C_FA_F No Ice (ft^2)	C_FA_F 1/2" Ice (ft^2)	C_FA_F 1" Ice (ft^2)	C_FA_F 2" Ice (ft^2)	C_FA_F 4" Ice (ft^2)	Canister Assembly Weight No Ice (Kip)	Canister Assembly Weight 1/2" Ice (Kip)
Canister Load 1	99	9.000	18.500	19.000	20.000	22.000	0.094	0.206
Canister Load 2	89	18.000	37.000	38.000	40.000	44.000	0.312	0.535
Canister Load 3	79	18.000	37.000	38.000	40.000	44.000	0.312	0.535
Canister Load 4	69	9.000	18.500	19.000	20.000	22.000	0.280	0.391

Deflection Check Required:	**Yes**	Import Deflection Results
3% Spine Deflection Check		
Allowable (3%) Horizontal Spine Deflection (inches)	Actual Deflection ***(inches)	Sufficient/ Insufficient
10.800	7.116	Sufficient

*** Relative deflection under service level wind speed

PAUL J. FORD & COMPANY
250 E Broad St, Ste 600 • Columbus, OH 43215
Phone 614.221.6679 www.pauljford.com

v4.4 - Effective 7-12-13

Date: 8/10/2018
PJF Project: 37516-0177.004.7805
Client Ref. # BU 875050
Site Name: Tufts
Description: 69' Flange Bolts
Owner: Crown Castle
Engineer: SJT

Asymmetric Bolt Analysis

Moment =	45.10	k-ft	TIA Ref.	G	Location =	Flange Plate		
Axial =	1.78	kips	ASIF =	N/A	η =	N/A	for BP, Rev. G Sect. 4.9.9	
Shear =	2.39	kips	Max Ratio =	105.0%	Threads =	X-Excluded	for FP, Rev. G	
Anchor Qty =	8							

**** For Flange Plates: Prying action is not considered in the bolt loads. ****

Item	Nominal Bolt Dia, in	Spec	Fy, ksi	Fu, ksi	Location, degrees	Bolt Circle, in	Area Override, in^2	Area, in^2	Max Net Compression, kips	Max Net Tension, kips	Load for Capacity Calc, kips	Capacity Override, kips	Capacity, kips	Capacity Ratio
1	0.750	A325	92	120	0.0	16.00	0.00	0.44	17.14	16.69	16.69	0.00	30.06	55.5%
2	0.750	A325	92	120	30.0	16.00	0.00	0.44	17.14	16.69	16.69	0.00	30.06	55.5%
3	0.750	A325	92	120	90.0	16.00	0.00	0.44	17.14	16.69	16.69	0.00	30.06	55.5%
4	0.750	A325	92	120	120.0	16.00	0.00	0.44	17.14	16.69	16.69	0.00	30.06	55.5%
5	0.750	A325	92	120	180.0	16.00	0.00	0.44	17.14	16.69	16.69	0.00	30.06	55.5%
6	0.750	A325	92	120	210.0	16.00	0.00	0.44	17.14	16.69	16.69	0.00	30.06	55.5%
7	0.750	A325	92	120	270.0	16.00	0.00	0.44	17.14	16.69	16.69	0.00	30.06	55.5%
8	0.750	A325	92	120	300.0	16.00	0.00	0.44	17.14	16.69	16.69	0.00	30.06	55.5%
								3.53						

© Copyright 2011, Paul J. Ford and Company, all right reserved.

Stiffened or Unstiffened, Interior Flange Plate - Any Bolt Material TIA Rev G

Site Data

BU#:	*875060*
Site Name:	*Tufts*
App #:	

Manufacturer:	Other

Reactions		
Moment:	45.1	ft-kips
Axial:	1.78	kips
Shear:	2.39	kips
Exterior Flange Run, T+q:	16.69	kips

Bolt Threads:
X-Excluded
φVn=φ(0.55*Ab*Fu)
φ=0.75, φ*Vn (kips):
21.87

Elevation: 69 feet

Bolt Data			
Qty:	12		
Diam:	0.75	Bolt Fu:	120
Bolt Material:	A325	Bolt Fy:	92
N/A:		<-- Disregard	
N/A:		<-- Disregard	
Circle:	16	in	

Interior Flange Bolt Results

Maximum Bolt Tension, Tu:	16.7	Kips, Ext. Flange Tu+q
Adjusted φ*Tn (due to Vu=Vu/Qty), I	30.1	Kips
Bolt Stress Ratio:	55.5%	**Pass**

Plate Data		
Plate Outer Diam:	18.375	in
Plate Inner Diam:	14	in (Hole @ Ctr)
Thick:	2	in
Grade:	60	ksi
Effective Width:	4.86	in

Interior Flange Plate Results Flexural Check

Controlling Bolt Axial Force:	16.7	Kips, Ext. Flange Tu+q
Plate Stress:	4.1	ksi
Allowable Plate Stress, φ*Fy:	54.0	ksi
Plate Stress Ratio:	7.6%	**Pass**

Stiffener Data (Welding at Both Sides)		
Config:	0	*
Weld Type:	Fillet	
Groove Depth:		<-- Disregard
Groove Angle:		<-- Disregard
Fillet H. Weld:		in
Fillet V. Weld:		in
Width:		in
Height:		in
Thick:		in
Notch:		in
Grade:		ksi
Weld str.:		ksi

n/a

Stiffener Results

Horizontal Weld :	n/a
Vertical Weld:	n/a
Plate Flex+Shear, fb/Fb+(fv/Fv)^2:	n/a
Plate Tension+Shear, ft/Ft+(fv/Fv)^2:	n/a
Plate Comp. (AISC Bracket):	n/a

Pole Results

Pole Punching Shear Check:	n/a

Pole Data		
Pole OuterDiam:	19	in
Thick:	0.3125	in
Pole Inner Diam:	18.375	in
Grade:	65	ksi
# of Sides:	18	"0" IF Round
Fu	80	ksi

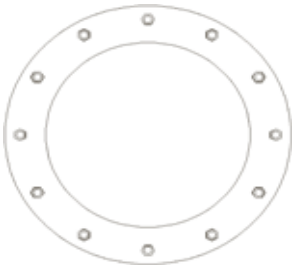

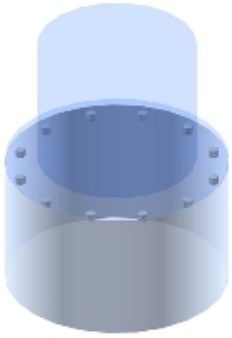

* 0 = none, 1 = every bolt, 2 = every 2 bolts, 3 = 2 per bolt

** Note: for complete joint penetration groove welds the groove depth must be exactly 1/2 the stiffener thickness for calculation purposes

PAUL J. FORD & COMPANY
250 E Broad St, Ste 600 • Columbus, OH 43215
Phone 614.221.6679 www.pauljford.com

(c) Copyright 2017 by Paul J. Ford and Company, all rights reserved.

Page:	1 of 1
Date:	8/10/2018
Version:	1.2
Effective:	6/3/2015

CODE:	TIA-222-G
ASIF:	1.00

69 FT CONCEALMENT FLANGE CONNECTION CALCULATIONS

BOLT INFORMATION

Diameter:	0.75	in.
Specification:	A325	
Bolt Fy	90	ksi
Bolt Fu	120	ksi
Bolt Circle:	16.0	in.

FLANGE REACTIONS

Moment (Mu):	45.10	kip*ft
Axial (Pu):	1.78	kips
Shear (Vu):	2.39	kips
Elevation:	69.00	ft
Max Ratio:	105%	

CONCEALMENT FLANGE INFORMATION

Spoke Thickness (t):	1.50	in.
Spoke Width (w):	2.50	in.
Steel Grade (Fy):	36	ksi

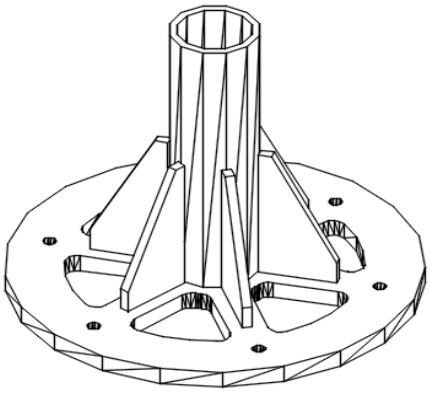

CONCEALMENT SPINE INFORMATION

Diameter:	5.00	in.
Thickness:	2.50	in.
Yield Stress (Fy):	50	ksi
Ult. Stress (Fu):	65	ksi
Weld Strength	70	ksi
Weld Type	CJP	
Top Weld Size		in
Btm Weld Size		in

STIFFENER INFORMATION

Configuration:	1	1 Stiffeners per Spoke
Weld Size:	0.250	in.
Width:	6.00	in.
Height:	6.00	in.
Thickness:	0.50	in.
Notch:	0.50	in.
Steel Grade:	36	ksi
Weld Strength:	70	ksi

FLANGE CONNECTION RESULTS

Circumferencial Weld: Acceptable

Stiffeners - Combined:	90.6%	Passing
Stiffeners - Weld to Spoke Plate:	35.8%	Passing
Stiffeners - Vertical Weld to Spine:	85.5%	Passing
Concealment Flange Plate:	76.3%	Passing

BASE POLE INFORMATION

Pole Diameter:		in.
Pole Thickness:		in.

BASE POLE FLANGE INFORMATION

Connected to:	Flange			
Weld Type:				
Weld Size:		in.		
Weld Strength:		ksi		
Weld Length*:	0.00	in.		in. (Override)
Spoke Thickness (t):	1.5	in.		in. (Override)
Spoke Width (w):	2.5	in.		in. (Override)
Steel Grade (Fy):	36	ksi		ksi (Override)

*Assumes a tributary length of the pole diameter based on the number of bolts.

Stiffened or Unstiffened, Ungrouted, Circular Base Plate - Any Rod Material

TIA Rev G Assumption: Clear space between bottom of leveling nut and top of concrete **not** exceeding (1)*(Rod Diameter)

Site Data

BU#:	
Site Name:	
App #:	
Pole Manufacturer:	*Other*

Reactions		
Mu:	380	ft-kips
Axial, Pu:	12	kips
Shear, Vu:	7	kips
Eta Factor, η	0.5	TIA G (Fig. 4-4)

If No stiffeners, Criteria:	AISC LRFD	<-Only Applcable to Unstiffened Cases

Anchor Rod Data		
Qty:	8	
Diam:	2.25	in
Rod Material:	A615-J	
Strength (Fu):	100	ksi
Yield (Fy):	75	ksi
Bolt Circle:	42	in

Anchor Rod Results

Max Rod (Cu+ Vu/ń):	57.5	Kips	Non-Rigid
Allowable Axial, Φ*Fu*Anet:	260.0	Kips	AISC LRFD
Anchor Rod Stress Ratio:	22.1%	**Pass**	φ*Tn

Plate Data		
Diam:	48	in
Thick:	1.5	in
Grade:	60	ksi
Single-Rod B-eff:	13.49	in

Base Plate Results Flexural Check

Base Plate Stress:	17.9	ksi	Non-Rigid
Allowable Plate Stress:	54.0	ksi	AISC LRFD
Base Plate Stress Ratio:	33.1%	**Pass**	φ*Fy
			Y.L. Length:
			24.66

Stiffener Data (Welding at both sides)		
Config:	0	*
Weld Type:		
Groove Depth:		in **
Groove Angle:		degrees
Fillet H. Weld:		<-- Disregard
Fillet V. Weld:		in
Width:		in
Height:		in
Thick:		in
Notch:		in
Grade:		ksi
Weld str.:	70	ksi

n/a

Stiffener Results

Horizontal Weld :	n/a
Vertical Weld:	n/a
Plate Flex+Shear, fb/Fb+(fv/Fv)^2:	n/a
Plate Tension+Shear, ft/Ft+(fv/Fv)^2:	n/a
Plate Comp. (AISC Bracket):	n/a

Pole Results

Pole Punching Shear Check: n/a

Pole Data		
Diam:	34	in
Thick:	0.325	in
Grade:	65	ksi
# of Sides:	18	"0" IF Round
Fu	80	ksi
Reinf. Fillet Weld	0	"0" if None

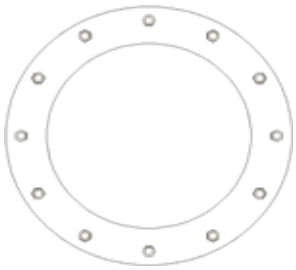

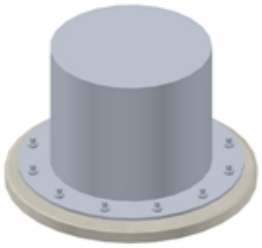

* 0 = none, 1 = every bolt, 2 = every 2 bolts, 3 = 2 per bolt

** Note: for complete joint penetration groove welds the groove depth must be exactly 1/2 the stiffener thickness for calculation purposes

Pier and Pad Foundation

BU # :	
Site Name:	
App. Number:	

TIA-222 Revision:	
Tower Type:	

Block Foundation?:	☐

Superstructure Analysis Reactions		
Compression, P_{comp}:	12	kips
Base Shear, Vu_comp:	7	kips
Moment, M_u:	380	ft-kips
Tower Height, **H**:	99	ft
BP Dist. Above Fdn, bp_{dist}:		in

Pier Properties		
Pier Shape:	Circular	
Pier Diameter, **dpier**:	5.0	ft
Ext. Above Grade, **E**:	1.00	ft
Pier Rebar Size, **Sc**:	8	
Pier Rebar Quantity, **mc**:	20	
Pier Tie/Spiral Size, **St**:	4	
Pier Tie/Spiral Quantity, **mt**:		
Pier Reinforcement Type:	Tie	
Pier Clear Cover, cc_{pier}:	3	in

Pad Properties		
Depth, **D**:	5.0	ft
Pad Width, **W**:	17.0	ft
Pad Thickness, **T**:	3.0	ft
Pad Rebar Size, **Sp**:	8	
Pad Rebar Quantity, **mp**:	16	
Pad Clear Cover, cc_{pad}:	3	in

Material Properties		
Rebar Grade, **Fy**:	60000	psi
Concrete Compressive Strength, **F'c**:	4000	psi
Dry Concrete Density, δ**c**:	150	pcf

Soil Properties		
Total Soil Unit Weight, γ:	150	pcf
Ultimate Net Bearing, Qnet:	20.000	ksf
Cohesion, **Cu**:	0.000	ksf
Friction Angle, φ:	45	degrees
SPT Blow Count, N_{blows}:	50	
Base Friction, μ:	0.6	
Neglected Depth, **N**:	4.00	ft
Foundation Bearing on Rock?	Yes	
Groundwater Depth, **gw**:	N/A	ft

<--Toggle between Gross and Net

Foundation Analysis Checks				
	Capacity	**Demand**	**Rating**	**Check**
Lateral (Sliding) (kips)	126.12	7.00	**5.6%**	**Pass**
Bearing Pressure (ksf)	15.56	1.93	**12.4%**	**Pass**
*Overturning (kip*ft)*	1822.69	569.70	**31.3%**	**Pass**
*Pier Flexure (Comp.) (kip*ft)*	1807.18	401.00	**22.2%**	**Pass**
*Pier Flexure (Tension) (kip*ft)*	0.00	0.00	**0.0%**	**Pass**
Pier Compression (kip)	12497.26	20.84	**0.2%**	**Pass**
*Pad Flexure (kip*ft)*	1760.62	136.42	**7.7%**	**Pass**
Pad Shear - 1-way (kips)	609.62	26.67	**4.4%**	**Pass**
Pad Shear - 2-way (ksi)	0.19	0.01	**4.2%**	**Pass**

Soil Rating:	**31.3%**
Structural Rating:	**22.2%**

Version 2.5.5